Aug. 16, 1955 C. HENGSTLER 2,715,376

WORK-FOLDING GUIDES FOR SEWING MACHINES

Filed Feb. 3, 1954 2 Sheets-Sheet 1

Fig. I.

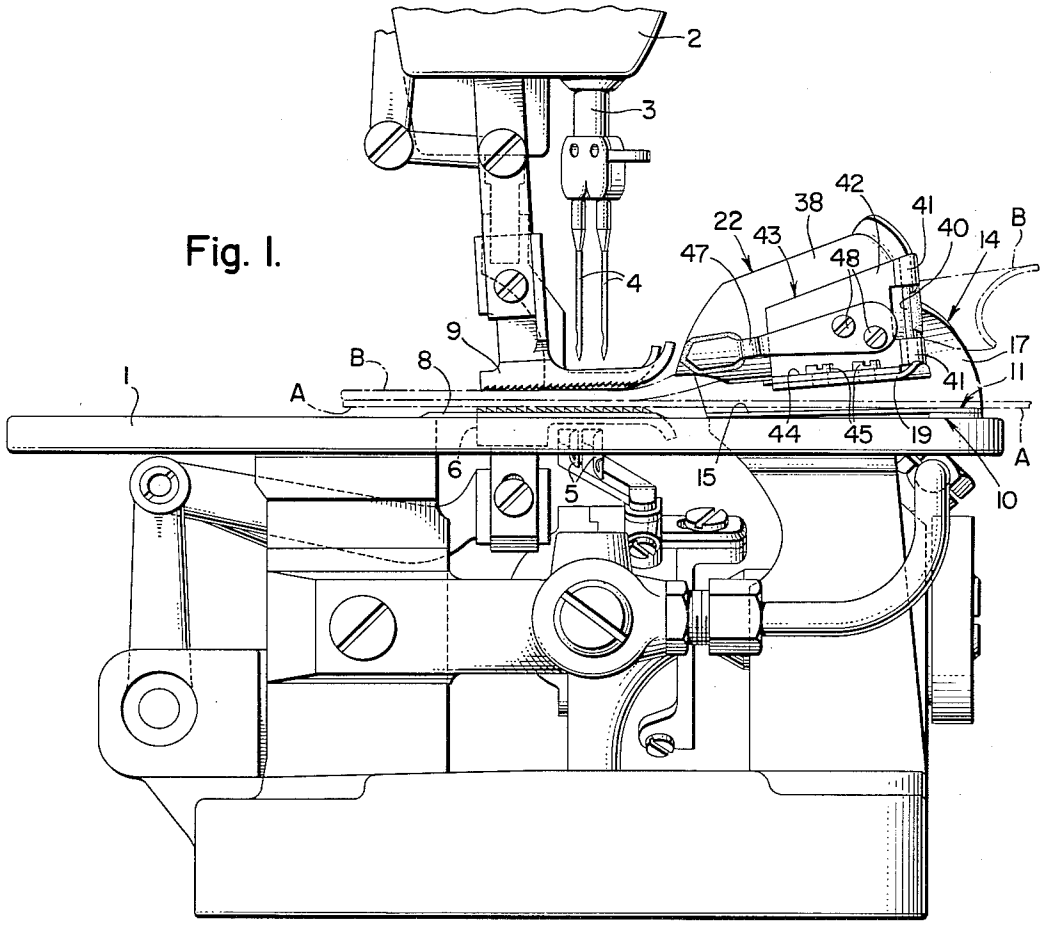

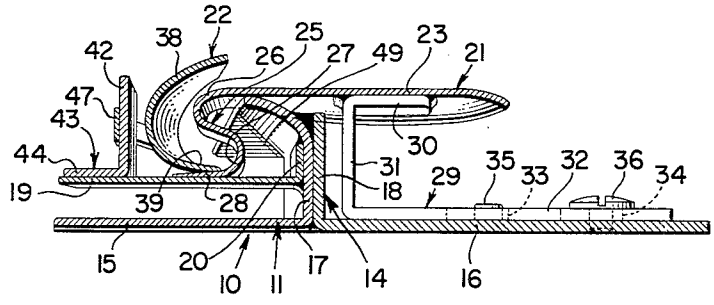

Fig. 4.

WITNESS

Nicholas Leszczak

INVENTOR.

Charles Hengstler

BY

J. E. Stamford

ATTORNEY

Aug. 16, 1955 C. HENGSTLER 2,715,376

WORK-FOLDING GUIDES FOR SEWING MACHINES

Filed Feb. 3, 1954 2 Sheets-Sheet 2

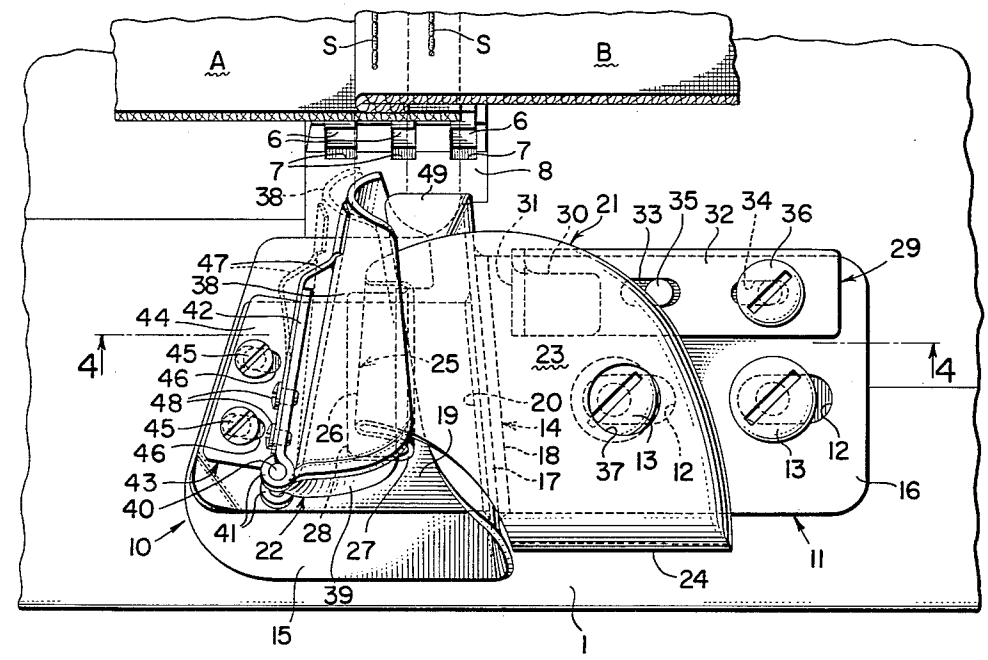

Fig. 2.

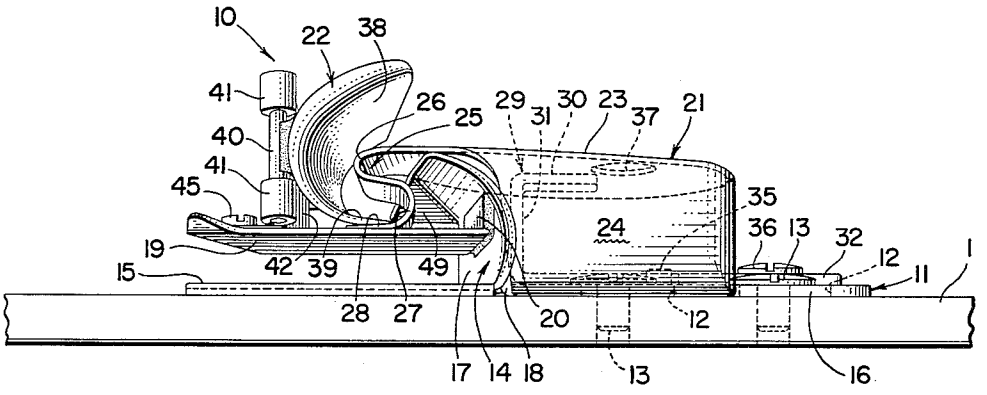

Fig. 3.

INVENTOR.
Charles Hengstler

BY

ATTORNEY

WITNESS
Nicholas Leszczak

United States Patent Office 2,715,376 Patented Aug. 16, 1955

2,715,376

WORK-FOLDING GUIDES FOR SEWING MACHINES

Charles Hengstler, Union, N. J., assignor to The Singer Manufacturing Company, Elizabeth, N. J., a corporation of New Jersey

Application February 3, 1954, Serial No. 407,833

2 Claims. (Cl. 112—147)

The present invention relates to sewing machines and has for a primary object to provide a new and improved work-folding guide for use with sewing machines. More specifically, it is an object of this invention to provide a work-folding guide for sewing machines having an edge-folding scroll formed in two sections, one of which is resiliently mounted for movement relative to the other to permit passage of abnormal thicknesses of work therethrough, which guide is constructed in a new and improved manner. In addition, it is an object of this invention to provide such a construction that is especially adapted for use in a guide having means for edge-guiding a first work-piece and for edge-folding a second work-piece and placing it in edge-overlapping relation with said first work-piece.

With the above and other objects in view, as will hereinafter appear, the invention comprises the devices, combinations and arrangements of parts hereinafter set forth and illustrated in the accompanying drawings of a preferred embodiment of the invention and the advantages attained thereby, will be readily understood by those skilled in the art.

Fig. 1 is a fragmentary end elevation view of a sewing machine having fitted thereon a work-folding guide constructed in accordance with the present invention.

Fig. 2 is a fragmentary top plan view, on an enlarged scale, of the work-folding guide and the adjacent portions of the sewing machine illustrated in Fig. 1.

Fig. 3 is a front elevation of the work-folding guide and a fragment of the bed-plate or work-supporting surface of the sewing machine as illustrated in Fig. 1.

Fig. 4 is a section view taken substantially on the line 4—4 of Fig. 2.

A guide constructed in accordance with the present invention may be used with any suitable sewing machine of conventional construction but is herein illustrated with a machine including a bed-plate or work-supporting surface 1 and the usual overhanging head 2 in which is journaled a needle-bar 3 carrying a pair of needles 4 as its lower end. The needles are designed to cooperate with a pair of threaded loopers 5 beneath the bed-plate 1 in the formation of two seams of two-thread chain stitches. Feeding of the work past the stitching point is effected by feed-dogs 6 which operate through slots 7 in the throat-plate 8. In the illustrated machine, which is adapted for use with particularly heavy goods, there is also provided an upper feeding foot 9.

The guide embodying the present invention which is illustrated in the accompanying drawings comprises a base member 10 including a base-plate 11 having elongated apertures 12 therein for receiving screws 13 that are threaded into the bed-plate 1, whereby the guide is secured to the bed-plate 1 for adjustment thereof laterally of the line of feed or the line of seam formation. Upstanding from the base-plate 11 intermediate the ends thereof is a wall 14 arranged substantially normal to the base-plate and transversely thereof or, in other words, substantially parallel to the line of seam formation. For

convenience and also to produce a more rigid construction, the base-plate 11 may be formed in two parts 15 and 16 each of which include a part 17 and 18, respectively, bent upwardly from the one end thereof. The parts 17 and 18 are then soldered, or in any other suitable manner, secured together in back-to-back relation. A shelf member 19 is provided, which shelf member includes a flange portion 20 bent therefrom at substantially a right angle and soldered to the part 17 of the wall 14, whereby the shelf member is carried by the wall 14 in spaced parallel relation with the part 15 of the base-plate 11.

Mounted upon the base-member 10 is a turn-down edge-folder including an inner scroll-element 21 and an outer scroll-element 22. The inner scroll-element 21 comprises an apron 23 which is generally parallel to the base-plate 11 and includes a forwardly and downwardly curved portion 24, and a scroll section 25 formed on the edge transversely of the base-plate 11 and in the line of feed. The scroll-section 25, which is designed to cooperate with the outer scroll-element 22 in underfolding the edge of a work-piece, has an underfolded convex portion 26 and a reverse folded concave portion 27 that terminates in a bottom-wall 28 generally parallel to the apron 23. The inner scroll-element 21 is supported by a bracket 29 with the bottom wall 28 of the scroll-portion 27 resting on the shelf member 19. The bracket 29 is provided with a horizontal leg 30 that is secured to the underside of the apron 23, as by soldering, a vertical leg 31, and a second horizontal leg 32 which overlies the part 16 of the base-plate 11. The leg 32 is provided with a pair of elongated apertures 33 and 34. The aperture 33 receives a pin 35 upstanding from the part 16 of the base-plate 11 and the aperture 34 receives a screw 36 threaded into the part 16, whereby the inner scroll-element 21 is secured to the base-plate for adjustment longitudinally thereof, or in other words, for adjustment transversely of the lines of stitch-formation and feed. An aperture 37 is formed in the apron 23 directly above the inner one of the screws 13 to provide access to the underlying screw 13 when it is desired to adjust the base-member 10 transversely of the line of feed.

The outer scroll-element 22 comprises a concave scroll-section 38 formed to cooperate with the scroll-section of the inner scroll-element and includes a bottom-wall 39 that overlaps the bottom wall 27 of the scroll-section 25 of the inner scroll element 21. At the outer edge of the forward or intake end of the scroll section 38, there is secured, as by soldering, a vertically arranged pivot pin 40 which is journaled at its ends in bearing lugs 41 that are formed along an edge of an upstanding leg 42 of a bracket 43. The bracket 43 also includes a horizontal leg 44 that rests upon the shelf 19 and is secured thereto for adjustment longitudinally of the base member 10 by screws 45 that extend through elongated apertures 46 in the leg 44 and are threaded into the shelf member 19. A spring 47 is designed to resist pivotal motion of the scroll section 38 about the axis of pivot pin 40 and for this purpose it is secured adjacent one end to the leg 42 of bracket 43 by screws 48 and at the other end it is secured as by soldering to the scroll section 38 adjacent the end remote from the pivot axis, or the discharge end thereof. The spring 47 is biased or pre-set so that it will normally be in engagement with the outer face of the leg 42 and the scroll section 38 will be in operative relation with the scroll section 25 of the inner scroll element, as illustrated in full lines in Fig. 2. However, when abnormally large thicknesses of work such as cross seams pass through the discharge end of the scroll, section 38 is free to pivot away from the scroll section 25 as illustrated in dotted lines in Fig. 2. When the abnormal thickness is past, the scroll section 38 will return under the resilient action

of spring 47 to normal operating relation with the scroll section 25.

With reference to Fig. 2, the seam produced consists of a first work-piece A which is presented to the stitching mechanism in flat condition, and a second work-piece B having the edge thereof underfolded. Two lines of stitches S are passed through the work, one adjacent the fold edge of the work-piece B and one adjacent the raw edge of the work-piece A. The raw edge of the work-piece B is concealed between the two lines of stitching.

In use, the work-piece A is threaded into the slot defined by the upper surface of the part 15 of the base-plate, the under surface of the shelf member 19, and the adjacent face of the part 17 of the wall 14, the latter of which serves to edge guide the same. The work-piece B overlies the apron 23 of the inner scroll element with the edge thereof folded under by the scroll sections. It should be noted that the part 17 of the wall 14 adjacent the discharge end of the guide is formed with a finger 49 that lies substantially parallel to the base-plate 11 and serves to control the work-pieces and particularly to control the folded portion of the work-piece B between the guide and the stitching point.

It should be noted that each of the elements of the present guide is individually adjustable relative to the work-supporting surface and each of the other elements. The base member 10 is adjustable transversely of the lines of stitch formation and feed by means of the elongated apertures 12. The inner scroll element 21 is adjustable transversely of the lines of stitch formation and feed, or in other words, longitudinally of the base member 10, by means of the elongated apertures 33 and 34. The outer scroll element 22 is adjustable not only transversely of the lines of stitch formation and feed but also angularly with respect thereto by means of the parallel elongated apertures 46.

Having thus described the nature of the invention, what I claim herein is:

1. A work-folding guide for a sewing machine comprising a base member including a base-plate, a wall extending upwardly from said base-plate and arranged generally transverse to said base-plate intermediate the ends thereof, a shelf member carried by said wall and overhanging said base-plate at one side of said wall in a generally parallel relationship, said base-plate, wall and shelf member defining an open-ended slot for receiving and edge-guiding a first work-piece, a folder for underfolding the edge of a second work-piece and guiding the same in a predetermined relationship with the first work-piece, said folder consisting of an inner scroll element and an outer scroll element, said inner scroll element being secured to said base-plate at the side of said wall opposite to said shelf member and comprising an apron defining a supporting surface for said second work-piece and a scroll section formed adjacent the edge and arranged transversely thereof, said scroll section including a convex underfolded portion and a reverse folded concave portion terminating in a bottom wall arranged generally parallel to said apron, said outer scroll element comprising a concave scroll section cooperating with the scroll section of said inner scroll element to underfold the edge of the second work-piece and including a bottom wall substantially in contact with the bottom wall of the reverse folded concave portion of said inner scroll element, and means for supporting said outer scroll element for resiliently biased motion of the discharge end thereof toward and away from said inner scroll element, said means comprising a bracket secured to said shelf member and including an upstanding leg arranged transversely of said base member, means for mounting the forward end of said outer scroll element to the forward end of the upstanding leg for angular movement about an axis generally normal to said base member, and a leaf spring secured at one end to said upstanding leg and at the opposite end to said outer scroll element adjacent the discharge end thereof.

2. In a sewing machine, a work-supporting surface, feeding mechanism below said work-supporting surface for feeding work along a line of feed, stitching mechanism including a pair of needles spaced apart in a direction transversely of the line of feed and complemental loop-taker means below said work-supporting surface adapted to cooperate with said needles in the formation of two lines of stitching parallel to but spaced apart transversely of the line of feed, and a folding guide for presenting work to said stitching mechanism comprising a base-member secured to said work-supporting surface for adjustment transversely of the line of feed, said base-member having an open-ended slot including an edge-guiding wall for receiving and edge-guiding a first work-piece, said slot being arranged to present said first work-piece to both of said needles for the formation of a first line of stitching adjacent the edge thereof and a second line of stitching inwardly thereof, a folder for underfolding the edge of a second work-piece and presenting the same to the stitching mechanism with said second line of stitching adjacent the fold edge and said first line of stitching inwardly thereof and inwardly of the underfolded edge, said folder consisting of an inner scroll element and an outer scroll element, means for securing said inner scroll element to said base member, and means for supporting said outer scroll element for resiliently-biased motion of the discharge end thereof toward and away from said inner scroll element comprising a bracket secured to said base member and including an upstanding leg arranged generally parallel to said lines of stitching, means for mounting the forward end of said outer scroll element to the forward end of the upstanding leg for angular movement about an axis generally normal to said base member, and a leaf spring secured at one end to said upstanding leg and at the opposite end to said outer scroll element adjacent the discharge end thereof.

References Cited in the file of this patent

UNITED STATES PATENTS

1,575,453	Shutzer	Mar. 2, 1926
2,096,330	Le Vesconte	Oct. 19, 1937