(No Model.)

E. PECKHAM.

CAR AXLE BEARING.

No. 417,276. Patented Dec. 17, 1889.

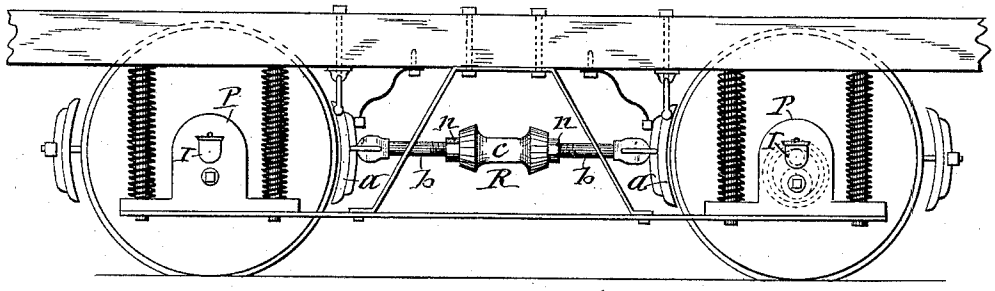

Fig. 1

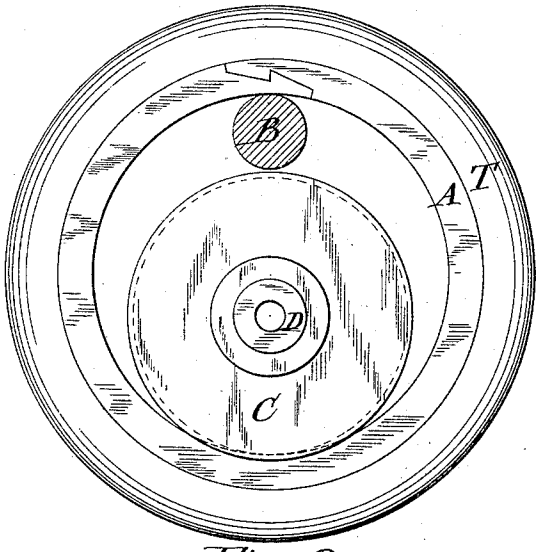

Fig. 2

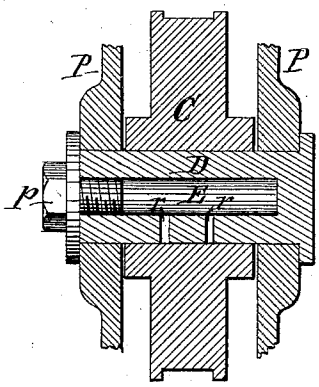

Fig. 5

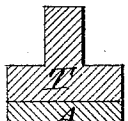

Fig. 3

Fig. 4

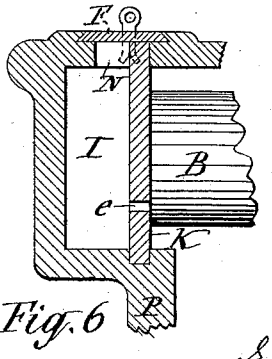

Fig. 6

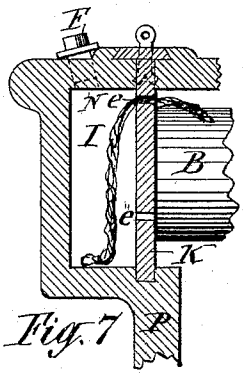

Fig. 7

WITNESSES:

C. L. Bendixon

H. M. Seamans

INVENTOR

Edgar Peckham

BY

Duell, Laass & Duell

ATTORNEYS

N. PETERS, Photo-Lithographer, Washington, D.C.

UNITED STATES PATENT OFFICE.

EDGAR PECKHAM, OF NEW YORK, N. Y., ASSIGNOR TO THE PECKHAM CAR WHEEL COMPANY, OF SAME PLACE.

CAR-AXLE BEARING.

SPECIFICATION forming part of Letters Patent No. 417,276, dated December 17, 1889.

Application filed February 18, 1889. Serial No. 300,243. (No model.)

To all whom it may concern:

Be it known that I, EDGAR PECKHAM, of New York, in the county of New York, in the State of New York, have invented new and useful Improvements in Car-Axle Bearings, of which the following, taken in connection with the accompanying drawings, is a full, clear, and exact description.

This invention relates to the class of car-gears which support the car-body by bearings mounted on rings suspended from the axles of the trucks; and the invention consists, first, in an improved construction of the aforesaid rings, which possess superior rigidity and are more durable and more secure in their operation; second, in novel devices for lubricating the rollers by which the car-body rides on the rings suspended from the axle of the truck, and, third, in novel devices for lubricating the abutting end bearings of the axles, all as hereinafter more fully described, and specifically set forth in the claims.

In the annexed drawings, Figure 1 is a side elevation of one of the running-gears of a car embodying my improvements. Fig. 2 is an enlarged detached side view of the ring, which is suspended from the axle, and the roller by which the car-body rides on said ring. Figs. 3 and 4 are transverse sections of the steel ring and re-enforcing ring, illustrating modifications of the form of the latter. Fig. 5 is a detached enlarged sectional view of the devices for lubricating the roller by which the car-body rides on the aforesaid ring; and Figs. 6 and 7 are sectional views of the devices for lubricating the abutting bearing on the end of the axle, illustrating a modification in the detail of construction.

Similar letters of reference indicate corresponding parts.

B denotes the axle of the truck; A, the ring, which is suspended from said axle; C, the roller, which is pivoted to the bracket or pedestal P and rides on the aforesaid ring, and thereby supports the car-body. The ring A, being subjected to the weight of the car-body and receiving the strain from two diametrically-opposite points, must therefore necessarily be continuous and formed of steel, and of such dimensions as to enable it to retain its perfect rotundity while subjected to the aforesaid strain. Said ring has hitherto been formed by bending a steel bar into circular shape and welding the ends together; but in practice it is found that it is very difficult to insure a perfect weld, and in consequence of this the ring fails to resist the strain it is subjected to when in use. To obviate this defect, I tie the ends of the steel bar together, preferably by forming the bar with overlapping hook-shaped ends which interlock with each other, as shown in Fig. 2 of the drawings, and these overlapping ends I weld together, as heretofore. In order to further insure the integrity of the ring and permit of the use of a comparatively light steel ring A, I re-enforce the same by a heavy ring or tire T, preferably of wrought-iron, which may be either shrunk onto the exterior of the ring A or pressed sidewise onto the same in the same manner as car-wheels are pressed onto axles. Said tire may be of any suitable shape in cross-section, so as to impart to it the requisite rigidity, preferably either T-shaped, as shown in Fig. 3 of the drawings, or half-round, as shown in Fig. 4 of the drawings.

In order to properly lubricate the roller C and at the same time exclude dust and grit from the journal D of said roller, I form said journal hollow, as shown in Fig. 5 of the drawings, the cavity E thereof extending through one end of the journal and provided with a removable stopper or plug *p*, preferably a screw-threaded plug engaging screw-threads on the interior of the journal, as shown. The cavity E serves as a lubricant-reservoir, from which lubricant is conducted to the exterior of the journal by lateral channels *r r*. By removing the plug *p* the lubricant can be introduced into the cavity E through the open end of the journal, and by replacing the plug the lubricant is retained in the cavity and dust and grit are excluded.

To prevent longitudinal movement of the axle B, check-plates K K are secured to the pedestals P P at opposite ends of the axle to serve as abutments for the latter. In order to properly lubricate this abutment, I form on the pedestal P, at the outside of the check-plate K, a chamber I for the reception of suitable lubricant, which is introduced through

a port N at the top, which port is closed by a suitable removable cap or stopper F, as shown in Figs. 6 and 7 of the drawings. The check-plate K is provided with a perforation *e*, which allows the lubricant to pass from the chamber I to the abutting face of the check-plate.

When it is desired to lubricate the bearing of the ring A upon the axle, I provide the check-plate K with the hole *e* above the axles, as shown in Fig. 7, and pass a wick through said hole.

The peculiar construction of the brake employed in connection with the described car-gear constitutes the subject-matter of another application for Letters Patent filed by me May 9, 1889, Serial No. 310,094.

Having described my invention, what I claim as new, and desire to secure by Letters Patent, is—

1. In combination with the axle B, ring A, suspended from said axle, and the roller C, riding on said ring and supporting the body, the tire T, encompassing said ring, substantially as and for the purpose specified.

2. In combination with the axle B, car-body, and roller C, the ring A, formed of a bar of steel of circular shape joined by overlapping interlocking ends, as and for the purpose set forth.

3. In combination with the axle B and body-supporting roller C, the ring A, formed of a bar of steel of circular shape joined by overlapping interlocking ends welded together, and the tire T, encompassing said ring, substantially as described and shown.

4. In combination with the roller C, the hollow journal D, provided with lateral channels *r*, and with a removable stopper on its end, substantially as described and shown.

5. In combination with the axle B, the check-plates K, provided with a perforation, and lubricant-chambers at the exteriors of said check-plates, substantially as and for the purpose set forth.

In testimony whereof I have hereunto signed my name this 7th day of February, 1889.

EDGAR PECKHAM. [L. S.]

Witnesses:
C. H. DUELL,
J. J. LAASS.