(12) STANDARD PATENT (11) Application No. **AU 2007276226 B2**
(19) AUSTRALIAN PATENT OFFICE

(54) Title
Oriented image coating on transparent substrate

(51) International Patent Classification(s)
B42D 15/10 (2006.01) ***B42D 15/00*** (2006.01)

(21) Application No: **2007276226** (22) Date of Filing: **2007.07.06**

(87) WIPO No: **WO08/009569**

(30) Priority Data

(31) Number	(32) Date	(33) Country
06117451.2	**2006.07.19**	**EP**

(43) Publication Date: **2008.01.24**
(44) Accepted Journal Date: **2013.09.19**

(71) Applicant(s)
SICPA HOLDING SA

(72) Inventor(s)
Degott, Pierre;Stichelberger, Albert;Despland, Claude-Alain;Muller, Edgar;Schmid, Mathieu

(74) Agent / Attorney
Davies Collison Cave, Level 15 1 Nicholson Street, MELBOURNE, VIC, 3000

(56) Related Art
WO 2006/029857 A2 (PCT/EP2005/009920)
WO 2006/061301 A1 (PCT/EP2005/055884)
US 7333268 B2 (its family member is: US 2005/0180020 A1)
US4705300 A

(12) INTERNATIONAL APPLICATION PUBLISHED UNDER THE PATENT COOPERATION TREATY (PCT)

(19) World Intellectual Property Organization
International Bureau

(43) International Publication Date
24 January 2008 (24.01.2008)

PCT

(10) International Publication Number
WO 2008/009569 A3

(51) International Patent Classification:
B42D 15/10 (2006.01) *B42D 15/00* (2006.01)

(21) International Application Number:
PCT/EP2007/056863

(22) International Filing Date: 6 July 2007 (06.07.2007)

(25) Filing Language: English

(26) Publication Language: English

(30) Priority Data:
06117451.2 19 July 2006 (19.07.2006) EP

(71) Applicant *(for all designated States except US)*: **SICPA HOLDING S.A.** [CH/CH]; Avenue de Florissant 41, CH-1008 Prilly (CH).

(72) Inventors; and
(75) Inventors/Applicants *(for US only)*: **DESPLAND, Claude-Alain** [CH/CH]; Chemin de la Cure 8, CH-1008 Prilly (CH). **SCHMID, Mathieu** [CH/CH]; Rue du Vallon 10, CH-1005 Lausanne (CH). **DEGOTT, Pierre** [FR/CH]; Chemin des Falaises 15, CH-1023 Crissier (CH). **MÜLLER, Edgar** [CH/CH]; Rue P.-A. de Faucigny 7, CH-1700 Fribourg (CH). **STICHELBERGER, Albert** [CH/CH]; Rue du Bugnon 33, CH-1020 Renens (CH).

(74) Agents: **HEPP, Dieter** et al.; Friedtalweg 5, CH-9500 Wil (CH).

(81) Designated States *(unless otherwise indicated, for every kind of national protection available)*: AE, AG, AL, AM, AT, AU, AZ, BA, BB, BG, BH, BR, BW, BY, BZ, CA, CH, CN, CO, CR, CU, CZ, DE, DK, DM, DO, DZ, EC, EE, EG, ES, FI, GB, GD, GE, GH, GM, GT, HN, HR, HU, ID, IL, IN, IS, JP, KE, KG, KM, KN, KP, KR, KZ, LA, LC, LK, LR, LS, LT, LU, LY, MA, MD, ME, MG, MK, MN, MW, MX, MY, MZ, NA, NG, NI, NO, NZ, OM, PG, PH, PL, PT, RO, RS, RU, SC, SD, SE, SG, SK, SL, SM, SV, SY, TJ, TM, TN, TR, TT, TZ, UA, UG, US, UZ, VC, VN, ZA, ZM, ZW.

(84) Designated States *(unless otherwise indicated, for every kind of regional protection available)*: ARIPO (BW, GH, GM, KE, LS, MW, MZ, NA, SD, SL, SZ, TZ, UG, ZM, ZW), Eurasian (AM, AZ, BY, KG, KZ, MD, RU, TJ, TM),

[Continued on next page]

(54) Title: ORIENTED IMAGE COATING ON TRANSPARENT SUBSTRATE

a) view from recto

b) view from verso

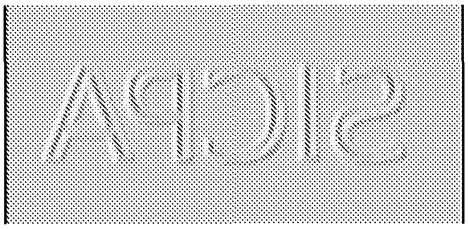

(57) Abstract: The present invention discloses a security element comprising a transparent substrate and a magnetically oriented image coating on said substrate, wherein said image coating is preferably laid out such as to show a 3-dimensional effect, appearing in positive or negative relief respectively, if observed form the recto- or the verso side, respectively. The security element can be easily identified by the unaided eye, by just turning around the document and observing the angle-dependent image on either side. On the other hand, the security element cannot be reproduced by scanning or copying the document.

WO 2008/009569 A3

European (AT, BE, BG, CH, CY, CZ, DE, DK, EE, ES, FI, FR, GB, GR, HU, IE, IS, IT, LT, LU, LV, MC, MT, NL, PL, PT, RO, SE, SI, SK, TR), OAPI (BF, BJ, CF, CG, CI, CM, GA, GN, GQ, GW, ML, MR, NE, SN, TD, TG).

Published:

— *with international search report*

— *before the expiration of the time limit for amending the claims and to be republished in the event of receipt of amendments*

(88) Date of publication of the international search report:
10 April 2008

Oriented image coating on transparent substrate

Field of the Invention:

The present invention relates to a security element for value and ID documents. More specifically it relates to an angle-dependent image on a transparent substrate, preferably showing a 3-dimensional effect, in positive or negative relief, if observed from the recto- or verso side, respectively.

Background of the Invention:

Optically variable devices of various types are used as efficient anti-copying means on security- and value-documents. Among these, particularly important optically variable copy-protection means are the optically variable inks (OVI®; EP-A-0227423). Optically variable inks (OVI®) are used to print surfaces and/or indicia which exhibit a viewing angle dependent color (= color shift).

Said anti-copying inks comprise optically variable pigments (OVP™); preferred types being the flake shaped thin-film optical interference pigments described in US 4,705,300; US 4,705,356; US 4,721,271 and thereto related disclosures.

Magnetic optically variable pigments in printing inks or coatings allow for the production of magnetically induced images, designs and/or patterns through the application of a corresponding magnetic field, causing an orientation of the magnetic optically variable pigment in the coating, followed by drying/curing the latter. The result is a fixed magnetically induced image, design or pattern in an optically variable ink. Depending on their layout, said images, patterns or designs are perceived as

having a three dimensional or relief-like appearance, although the printing itself remains geometrically flat.

The magnetic optically variable printing inks disclosed in the co-pending European patent application EP06113891.3 of the same applicant, the respective content of which is herein included by reference, are particularly adapted for the production of magnetically induced images.

Materials and technology for the orientation of magnetic particles in coating compositions, and corresponding printing processes have been disclosed in US 2,418,479; US 2,570,856; US 3,791,864; US 3,676,273; US 5,364,689; US 6,103,361; US 2004/0051297; US 2004/0009309; US 2002/0160194; WO 02/09002; US 2005/0106367; WO 04/007095; WO 2005/058608 and WO 2005/002866, the respective contents of these documents are incorporated herein by reference.

The documents of the prior art provide thus various methods and apparatuses for producing a magnetic image coating on a substrate. In all cases, said magnetic image coating is provided in such a way that it can be viewed only from a single side of the substrate, noteworthy from the printed side. No recto-verso use of a magnetically oriented coating has been disclosed.

Description of the invention:

It was the problem of the present invention to provide a security element which allows an easy authentication of an article such as a banknote and which can be performed by the man on the street with the unaided eye.

According to the present invention, this problem is addressed by a security element as defined in claim 1. More specifically, the present invention is related to a security element comprising a transparent substrate and an image coating on said substrate, wherein said image coating comprises an angle-dependent image visible from both the recto- or the verso side of the transparent substrate and appearing in positive or negative relief respectively, if observed from the recto- or the verso side, said image consisting of magnetically oriented magnetic optically variable interference pigments.

The present invention also provides a process for producing a security element according to claim 1, comprising the steps of (a) applying a coating composition comprising magnetically orientable magnetic optically variable interference pigments to a transparent substrate surface, (b) orienting the magnetic optically variable interference pigments in the applied coating composition of step a) by applying a magnetic field, and (c) curing/drying the oriented coating composition of step b) to fix the pigments in an oriented position under formation of an angle-dependent image visible from both the recto- or the verso side of the transparent substrate and appearing in positive or negative relief respectively, if observed from the recto- or the verso side, thus obtaining an image coating.

Further, the present invention provides the use of a security element according to the present invention for a security document.

Also, the present invention provides a document wherein said document comprises at least one security element according to the present invention.

It was surprisingly discovered that an optically variable security element comprising a transparent substrate, which

allows to observe a coating disposed thereupon from the recto and the verso side, said coating carrying a design with a special visual appearance, preferably a 3D appearance, produced through the orientation of pigment flakes, e.g. by applied magnetic fields, is an extremely valuable security element for the rapid visual (overt) authentication of documents, in particular of transparent items or items comprising transparent regions. In fact, the especially preferred magnetically produced, apparent 3D-relief inverts upon a change of the side of observation; it is therefore sufficient to turn the document around and to observe the inversion of the magnetically induced image, in order to rapidly authenticate the document.

Magnetic orientation of an image coating results in a visual effect which can change depending upon the viewing angle under which said image coating is observed. This effect is preferably a 3-dimensional effect which is reverted when said image is viewed from the upper or lower side (recto or verso side). However, also other visual effects are possible, such as switching optical effects or rolling bar-type images.

For example, if the design is perceived as a round curvature, a line or spot of maximum reflection appears on the design; said line or spot moves with the angle of observation either in the

same sense (convex appearance), or in the opposite sense, (concave appearance), depending on the side of observation.

The security element of the present invention is thus an angle-dependent image on a transparent substrate, preferably laid out such as to show a 3-dimensional effect, appearing in positive or negative relief respectively when observed from the recto- or verso side, respectively, such as illustrated by Fig. 1 which is explained in more detail below. The 3-dimensional image appears to come out of the plane or to go into the plane, depending on the side of observation.

Examples of suitable 3D-designs are a cylinder, a hemisphere, a pyramid, a cone, a roof, etc. Several geometric forms may further be combined. Their simple appearance can be easily recognized as emerging from or diving into the plane of the image. More sophisticated designs such as numbers, characters, figures or logos may be produced as well. The security element of the present invention is preferably combined with color-shifting elements, such as the "switching optical effect" and "rolling bar-type images" disclosed in WO 04/007095.

The security element of the present invention can be easily identified by the unaided eye, just by turning around the document or item, and observing the angle-dependent image on either side. It is therefore very suited for use by the man in the street, who is provided with a simple means to check the authenticity of e.g. a banknote.

The security element of the present invention can further be over-laminated with a transparent foil, in order to increase the resistance and life-time of the security element.

The transparent substrate can be of any plastic or polymer material which is transparent in at least part of the visible spectrum (i.e. in the wavelength range between 400nm and 700nm). It is, in fact, sufficient for the visual identification of the overt security element, if the human observer can at least see through the substrate in a part of the visible spectral domain. Preferably, the transparent substrate is chosen from polyethylene-terephthalate, polycarbonate, polyvinyl chloride, polyacrylates, polyacrylonitriles, polystyrene, polypropylene, polynaphthalene-terephthalate, and mixtures or copolymers thereof.

Said transparent substrate may be coloured, entirely or in part, provided that there is transparency in at least part of the visible spectrum, such as to allow a human observer to see through, e.g. the transparent substrate and the laminate, and to allow for the perception of the magnetically induced image from both sides, recto and verso of the laminated product.

"Transparent" in the context of the present invention means: "providing for optical transparency at least in part of the visible spectrum (400nm-700nm wavelength)".

The angle-dependent image on the transparent substrate is produced by applying, orienting and drying/curing a magnetically orientable coating on this latter, e.g. according to the co-pending application EP06113891.3 filed by the same applicant, whose contents are incorporated herein by reference.

Thus, there is described a process for producing said magnetically induced image coating on a transparent substrate comprises the steps of a) applying a coating composition comprising magnetically orientable pigments to a transparent substrate surface, b) orienting the magnetic pigment particles in the applied coating composition of step a) by applying a magnetic field so as to create a specific visual effect which changes depending upon the viewing angle under which said image coating is observed, such as a 3-dimensional effect in the coating which appears in positive or negative relief if observed from the recto- or verso side, respectively, and c) curing/drying the oriented coating composition of step b) to fix the particles in the oriented position.

In detail, to produce said magnetically induced image coating, a printing ink or coating composition, comprising magnetic optically variable interference pigments, is applied to said transparent substrate by a printing process such as copper plate intaglio printing, flexographic printing, gravure printing, silkscreen printing or roller coating, and the magnetic pigments are oriented, e.g. according to WO 2005/002866; the coating is finally dried/cured as known to the skilled man.

Suitable printing inks or coating compositions are disclosed in the co-pending European patent application EP06113891.3, wherein magnetic optically variable printing inks or coating compositions are described to the very detail, which have the required characteristics for the magnetic orientation of pigment particles to form patterns, images or designs in said coating.

2007276226 30 Apr 2013

The pigments comprised in the magnetic optically variable printing inks or coating compositions are preferably magnetic optically variable interference pigments chosen from vacuum deposited magnetic thin film interference pigments, interference coated metallic pigments, interference coated non-metallic pigments, magnetic liquid crystal pigments, and mixtures thereof. Magnetic optically variable pigments according to WO 02/073520; US 4,838,648; EP-A 688675; WO 02/73250; WO 03/00801 or US

6,838,166 are preferably used according to the present invention. The vacuum deposited magnetic thin film interference pigments can be chosen form the five layer and seven layer vacuum deposited magnetic thin film interference pigments of US 4,838,648 and WO 02/73250.

The magnetic pigment in the said coating is oriented by the application of suitable magnetic fields, preferably so as to show a 3-dimensional effect. The orienting step b) can be performed either simultaneously with the coating step a) or subsequently to the coating step a). Magnetic orientation of magnetic particles has been described in the art. Reference is made in this respect to the prior art documents cited in the introductory part of the present application.

The curing/drying step c) can be performed by physical evaporation of volatile compounds, UV curing, oxidative reticulation, chemical cross-linking, electron beam curing, or by any combination thereof.

The process for producing said security element may further comprise the step of laminating a transparent foil over the magnetically induced image coating, in order to increase the resistance and life-time of the security element. Said transparent foil can be chosen from poly-ethylene-terephthalate, polycarbonate, polyvinyl chloride, polyacrylates, polyacrylonitriles, polystyrene, polypropylene, poly-naphthalene-terephthalate, and mixtures or copolymers thereof. Thus, for the selection of the transparent over-lamination foil, the same criteria apply as for the transparent substrate. In a particular embodiment, the magnetically induced image coating is disposed between two plastic foils of the same type.

The security element of the present invention may further comprise other marking means such as infrared markers, luminescent markers such as fluorescent markers or phosphorescent markers, UV markers, magnetic markers, forensic markers or mixtures thereof, as well as other security elements (holograms, etc.), physically embossed reliefs or indicia.

A particularity of the security element of the present invention is that the color, the apparent relief, as well as the color-shifting properties are neutralized when it is illuminated from the back side, e.g. on a light table, or held against an illuminating background such as a lamp or the sky.

This additional effect further enhances the value of the security element of the present invention, because it allows for its rapid authentication by front-light against back-light observation. The perception of the angle-dependent, recto-verso 3-D relief features of the security element of the present invention depends in fact on front-lighting conditions.

Further to this, the perception of the security element of the present invention in translucidity depends also on the local coloration of the transparent substrate and of the over-lamination foil. This enables the skilled man to realize further interesting embodiments.

The security element of the present invention can be used on security documents or security articles such as banknotes, credit cards, access cards, security badges, documents of value, rights, or identity, transportation tickets, lottery tickets, event tickets, tax banderoles, security threads, labels, foils, tear-strips or product security applications, as a protection against counterfeit or illegal reproduction.

In general, the said security documents or security articles need to have a transparent area wherein the security element of the present invention is applied. This can be achieved by integration of transparent areas such as windows, threads and the like into said documents, e.g. a punched-out hole covered with a transparent foil, or, alternatively, said documents are completely made of such transparent substrates, providing for a transparent region, i.e. a region which is free of ink or coating. Some currencies, made of polymer substrate, provide for such transparent areas and are therefore able to carry the security element of the present invention.

The present invention will now be further illustrated with reference to non-limiting examples and drawings.

Figure 1 shows a computer generated illustration of the inversion of a text in relief in recto and verso view, respectively.

Figure 2 shows the result of a copier scan of a magnetically induced image, comprising magnetic optically variable interference pigment according to the present invention. Both, the recto and the verso sides were scanned and reproduced.

Figure 3 schematically shows in a cross section view how a relief or 3D appearance is produced in a geometrically flat coating through the appropriate orientation of particles.

As illustrated in Fig. 1, the angle-dependent image (design, pattern) of the invention should allow for an easy perception of

2007276226 30 Apr 2013

a relief, either coming out of the plane or going into the plane of the image, when viewed from one side or the other side.

In Fig. 2, no particular difference is seen as to the 3D effect of the recto and the verso side. However, on the original, the "20" on the recto side (a) appears in positive relief on a concave surface, whereas the "20" on the verso side (b) appears in negative relief on a convex surface. This illustrates that the security element of the present invention is not copy-able or scan-able.

Fig. 3 schematically shows in a cross section view how a relief or 3D appearance can be produced in a geometrically flat coating through the appropriate orientation of particles. The pigment flakes (1) in the coating (2) are oriented in the same way as if they would be present on the surface of a hemisphere (3) but projected down into the plane of the coating. In recto view a) the flakes fixed in their positions provide for the very same appearance as if they would be present on a convex hemisphere. In verso view b) the pigment flakes appear as if they would be present on a concave hemisphere.

This relief in Fig. 3 must not be confused with a physically embossed 3D-relief structure, which is a different security element. In fact, the security element of the present invention can be independently combined with such an embossed relief.

Throughout this specification and the claims which follow, unless the context requires otherwise, the word "comprise",

and variations such as "comprises" and "comprising", will be understood to imply the inclusion of a stated integer or step or group of integers or steps but not the exclusion of any other integer or step or group of integers or steps.

The reference in this specification to any prior publication (or information derived from it), or to any matter which is known, is not, and should not be taken as an acknowledgment or admission or any form of suggestion that that prior publication (or information derived from it) or known matter forms part of the common general knowledge in the field of endeavour to which this specification relates.

2007276226 31 Jul 2013

THE CLAIMS DEFINING THE INVENTION ARE AS FOLLOWS:

1. Security element comprising a transparent substrate and an image coating on said substrate, wherein said image coating comprises an angle-dependent image visible from both the recto- or the verso side of the transparent substrate and appearing in positive or negative relief respectively, if observed from the recto- or the verso side, said image consisting of magnetically oriented magnetic optically variable interference pigments.

2. Security element according to claim 1, wherein said transparent substrate is selected from the group consisting of poly-ethylene-terephthalate, polycarbonate, polyvinyl chloride, polyacrylates, polyacrylonitrile, polystyrene, polypropylene, poly-naphthalene-terephthalate, and mixtures or copolymers thereof.

3. Security element according to claim 1 or 2, wherein a transparent foil is laminated over said image coating.

4. Security element according to claim 3, wherein said transparent foil is selected from the group consisting of poly-ethylene-terephthalate, polycarbonate, polyvinyl chloride, polyacrylates, polyacrylonitrile, polystyrene, polypropylene, poly-naphthalene-terephthalate, and mixtures or copolymers thereof.

5. Security element according to claim 1, wherein said magnetic optically variable interference pigments are selected from the group consisting of vacuum deposited magnetic thin film interference pigments, interference coated metallic pigments, interference coated non-metallic

2007276226 31 Jul 2013

pigments, magnetic liquid crystal pigments, and mixtures thereof.

6. Security element according to claim 5, wherein said pigments are selected from the group consisting of five layer and seven layer vacuum deposited magnetic thin film interference pigments.

7. Security element according to one of claims 1 to 6, further comprising marking means selected from the group consisting of infrared markers, fluorescent markers, UV markers, phosphorescence markers, magnetic markers, forensic markers and mixtures thereof.

8. Security element according to one of claims 1 to 7, further comprising other security elements selected from the group consisting of holograms, embossed reliefs, indicia and combinations thereof.

9. Security element according to one of claims 1 to 8, further comprising color-shifting elements.

10. Process for producing a security element according to claim 1, comprising the steps of

a) applying a coating composition comprising magnetically orientable magnetic optically variable interference pigments to a transparent substrate surface,

b) orienting the magnetic optically variable interference pigments in the applied coating composition of step a) by applying a magnetic field, and

2007276226 31 Jul 2013

c) curing/drying the oriented coating composition of step b) to fix the pigments in an oriented position under formation of an angle-dependent image visible from both the recto- or the verso side of the transparent substrate and appearing in positive or negative relief respectively, if observed from the recto- or the verso side, thus obtaining an image coating.

11. Process according to claim 10, further comprising the step of laminating a transparent foil over said image coating.

12. Process according to claim 10 or 11, wherein said curing/drying step c) is carried out by a process selected from the group consisting of physical evaporation, UV-curing, oxidative reticulation, chemical crosslinking, electron beam curing, and any combination thereof.

13. Process according to one of claims 10 to 12, wherein said step a) is performed by means of a printing process selected from the group consisting of copperplate intaglio printing, flexographic printing, gravure printing, silkscreen printing and roller coating.

14. Use of a security element according to one of claims 1 to 9 for a security document.

15. Use according to claim 14, wherein said security document is selected from the group consisting of banknotes, credit cards, access cards, security badges, documents of value, rights or identity, transportation tickets, lottery tickets, event tickets, tax banderoles,

2007276226 31 Jul 2013

security threads, labels, foils, strips and product security applications.

16. A document, wherein said document comprises at least one security element according to one of claims 1 to 9.

17. Document according to claim 16, wherein said document is selected from the group consisting of a banknote, a credit card, an access card, a security badge, a document of value, rights or identity, a transportation ticket, a lottery ticket, an event ticket, a tax banderole, a security thread, a label, a foil, a tear-strip and a product security application.

18. A security element according to claim 1, a process according to claim 10, a use according to claim 14, or a document according to claim 16, substantially as hereinbefore described.

Fig. 1

a) view from recto

b) view from verso

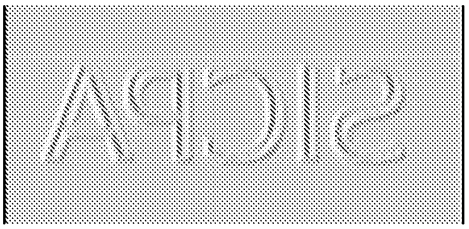

FIG. 2

a) scanned view recto

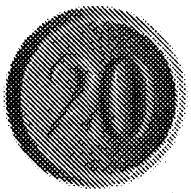

b) scanned view verso

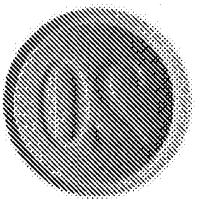

FIG. 3

a) recto view

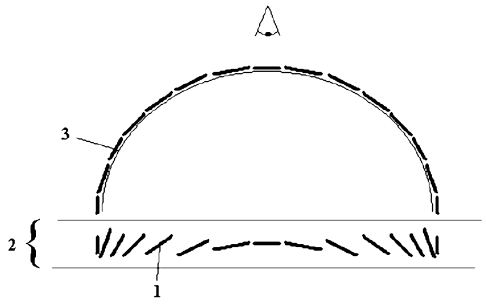

b)verso view