(12) UK Patent Application (19) GB (11) 2 216 744 (13) A

(43) Date of A publication **11.10.1989**

(21) Application No **8901255.3**

(22) Date of filing **20.01.1989**

(30) Priority data
(31) **8801310** (32) **21.01.1988** (33) **GB**

(71) Applicant
ERA Patents Ltd

(Incorporated in the United Kingdom)

Cleeve Road, Leatherhead, Surrey, KT22 7SA, United Kingdom

(72) Inventor
Charles Philip Strudwick

(74) Agent and/or Address for Service
Gill Jennings and Every
53/64 Chancery Lane, London, WC2A 1HN, United Kingdom

(51) INT CL⁴
H04N 5/30, G02B 21/06

(52) UK CL (Edition J)
H4F FAA FCK FD18K FD24 FD27A1 FD27R9 FD27S FD27T1 FD53M FD83B FD83C

(56) Documents cited
WO 88/08550 A1

(58) Field of search
UK CL (Edition J) **H4F FAA FCA FCB FCC FCK FDX**
INT CL⁴ **H04N**
"Derwent WPI (On-line)"

(54) Scanning optical microscopes

(57) A scanning optical microscope includes means 13, 2 to scan a light beam across an object 3 and, an extended photo-sensitive detector 6 arranged to receive light from spatially separated points on the object at correspondingly separated image points on the detector 6. Signals from the extending photo-sensitive detector 6 are read out by means arranged to reject all signals generated by light falling outside the Airy disc of each image. The system provides a confocal image of the object.

In a preferred example the scanning optical microscope is an optical stage arranged to fit in a scanning electron microscope and includes an electro-luminescent device 13 arranged to convert a scanning electron beam generated by the electron microscope into a scanning light beam.

Fig.3.

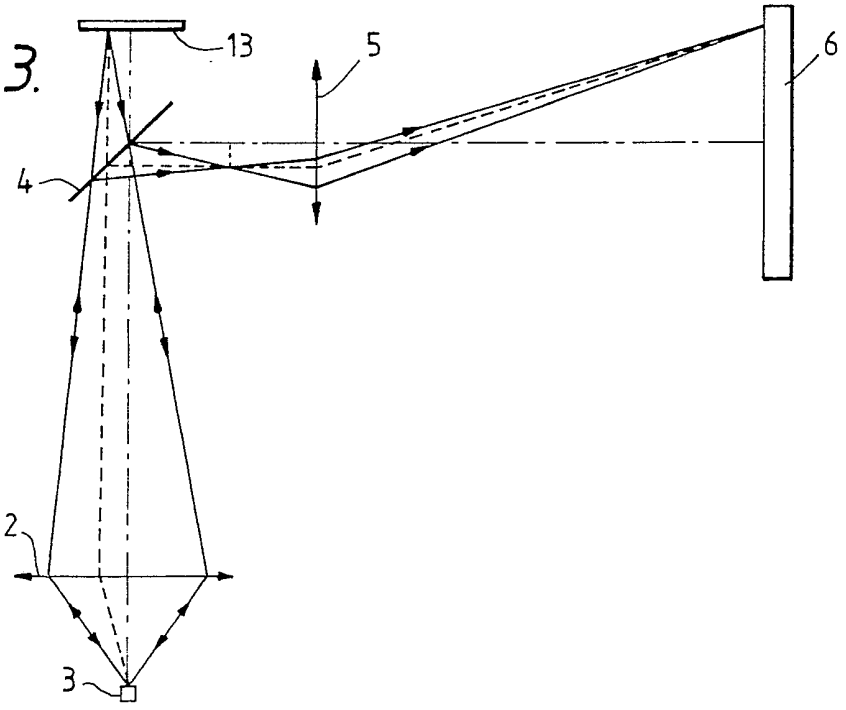

At least one drawing originally filed was informal and the print reproduced here is taken from a later filed formal copy

GB 2 216 744 A

Fig.1.

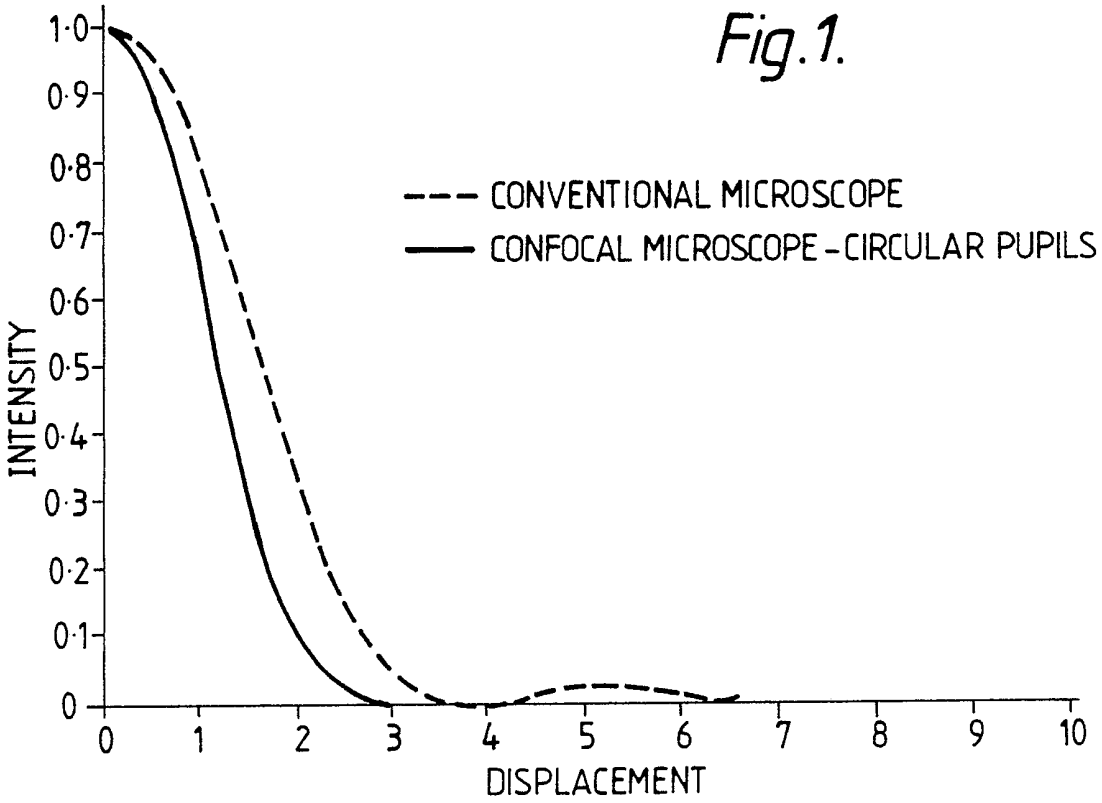
1·0
0·9
0·8
0·7
0·6
0·5
0·4
0·3
0·2
0·1
0
INTENSITY
0
1
2
3
4
5
6
7
8
9
10
DISPLACEMENT
CONVENTIONAL MICROSCOPE
CONFOCAL MICROSCOPE - CIRCULAR PUPILS

Fig.2.

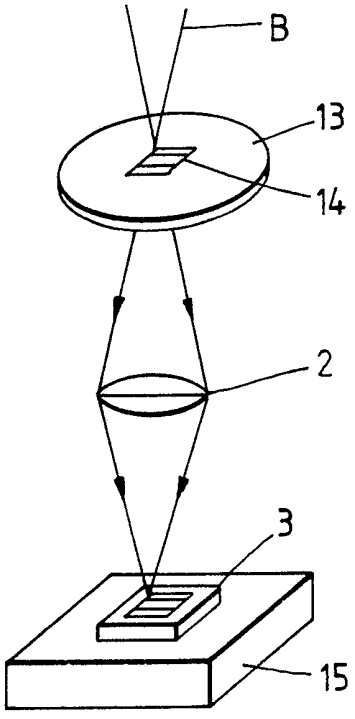
B
13
14
2
3
15

Fig.3.

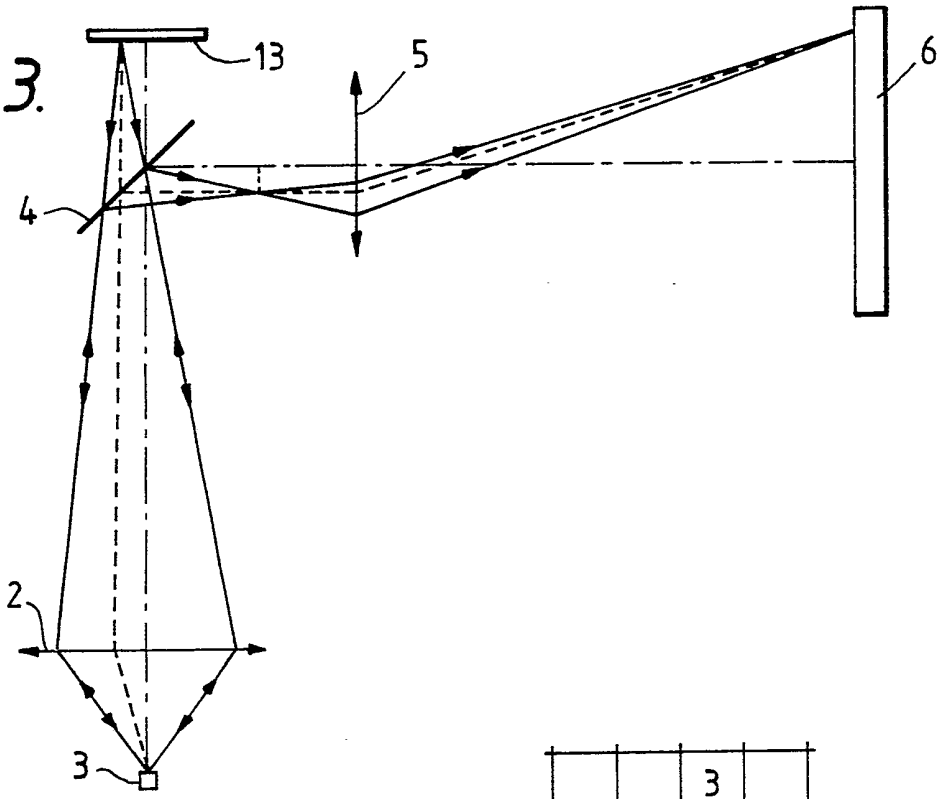

Fig.4(a).

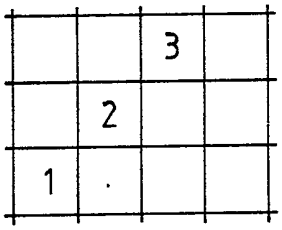

Fig.4(b).

Fig.4(c).

Fig.4(d).

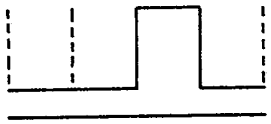

Fig.4(e).

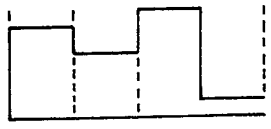

Fig.5.

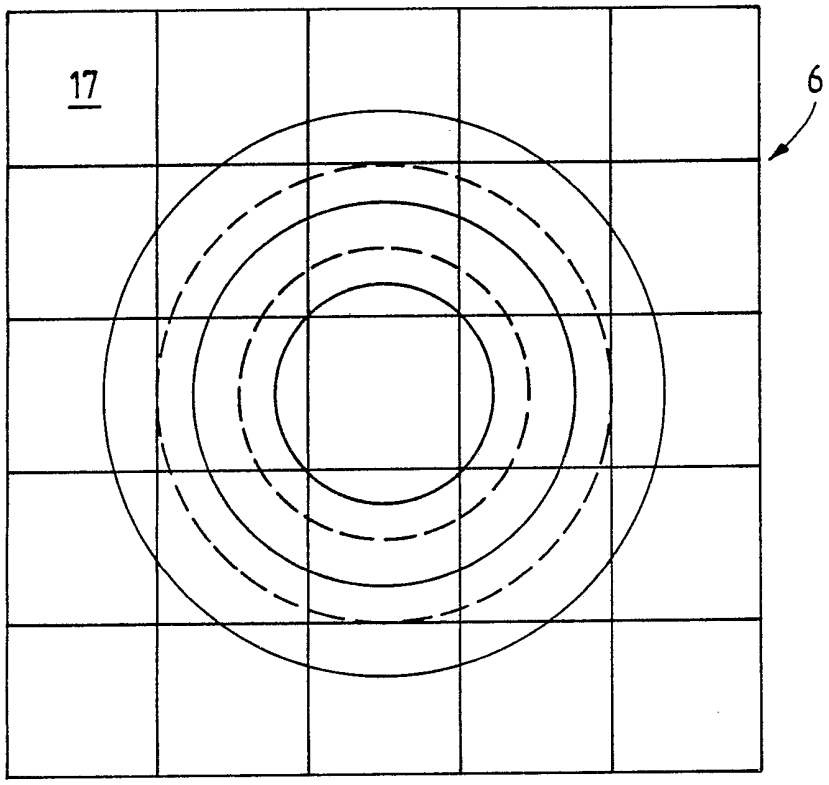

Fig.6.

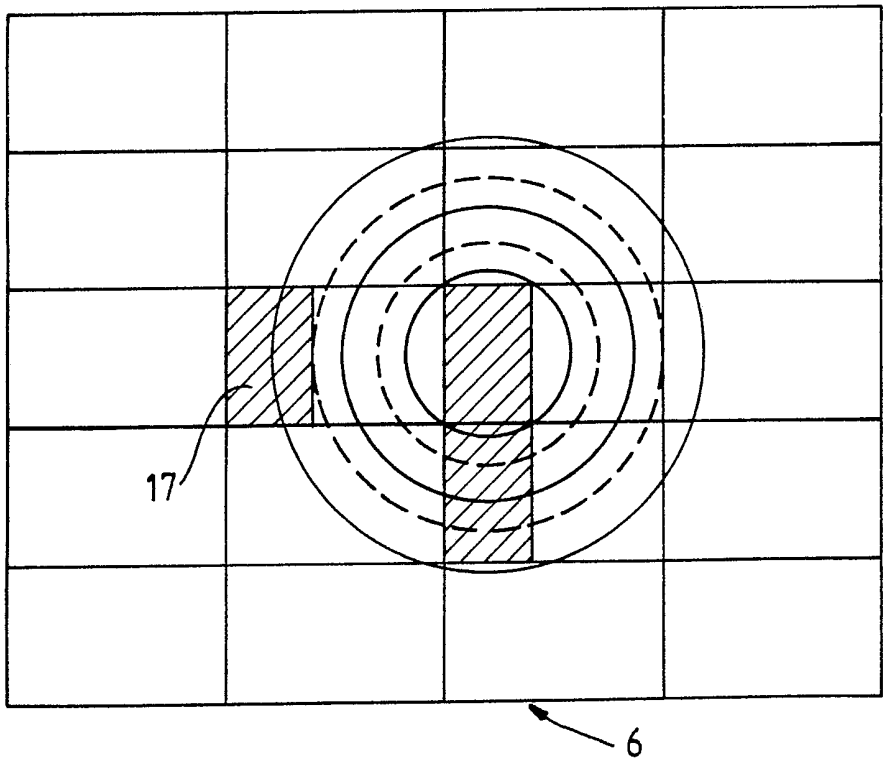

Fig.7.

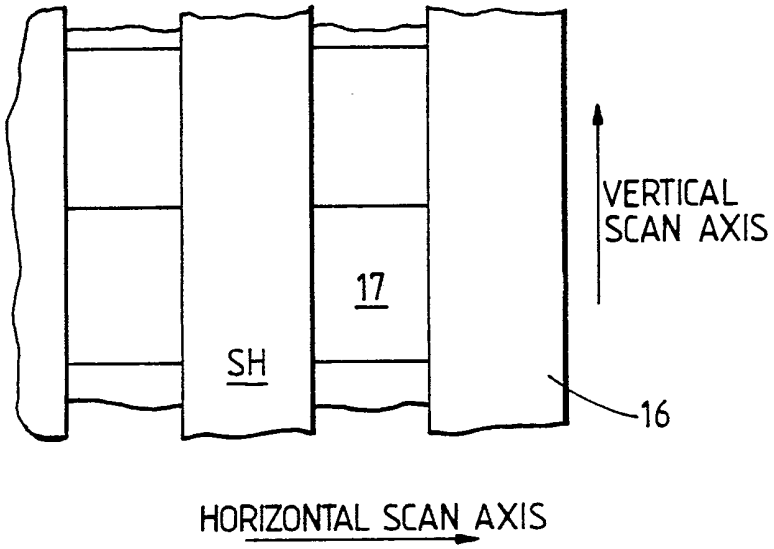
VERTICAL
SCAN AXIS
17
SH
16
HORIZONTAL SCAN AXIS

Fig.9.

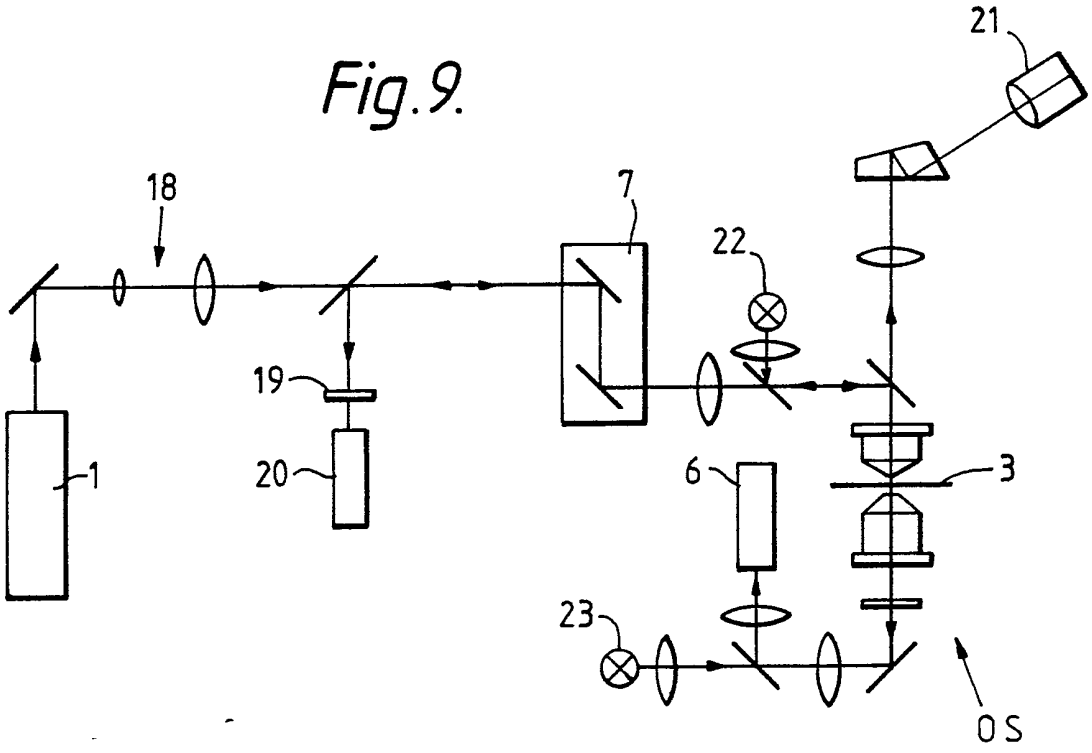
21
18
7
22
19
20
1
6
3
23
OS

Fig.8.

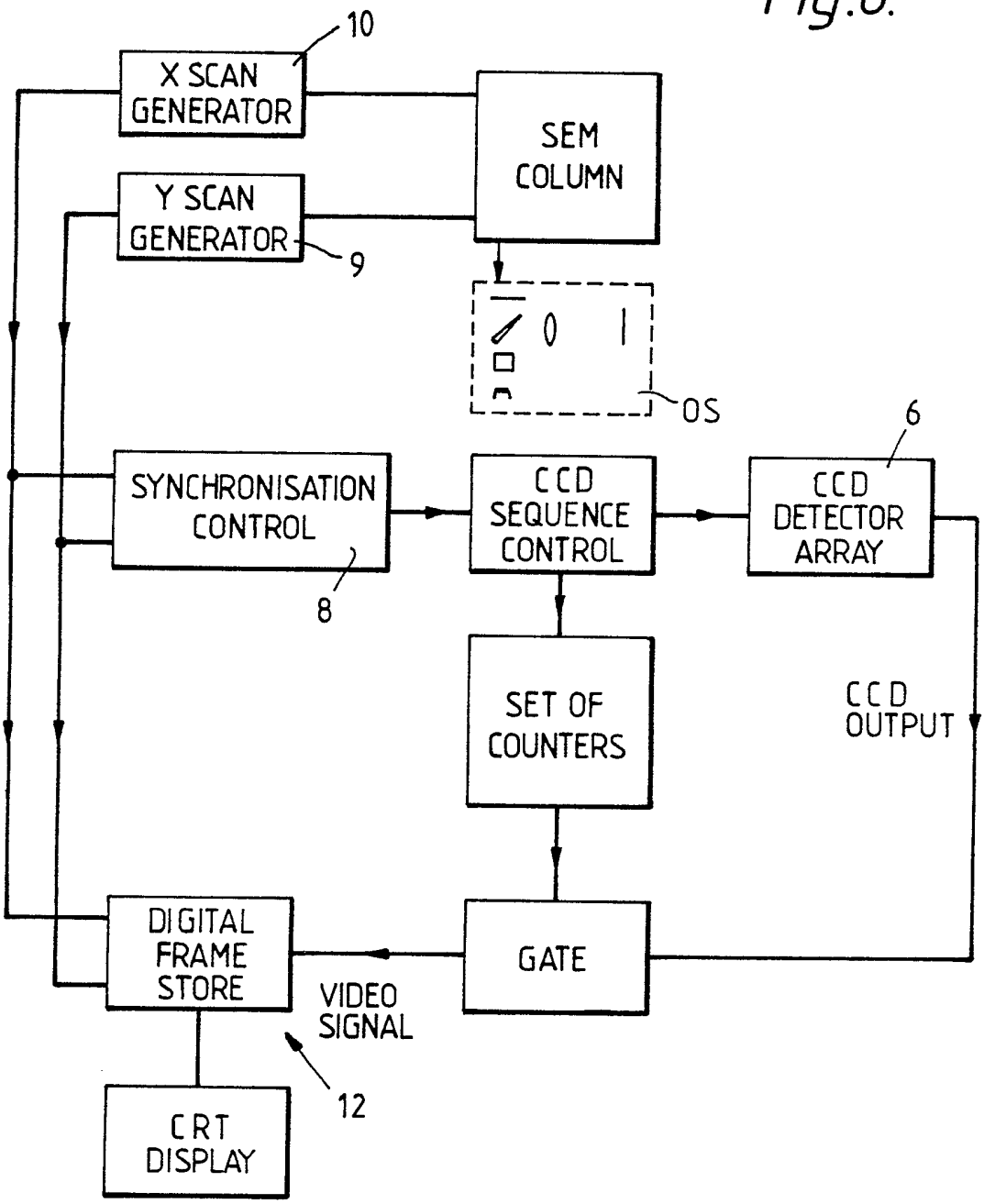
10
X SCAN GENERATOR
SEM COLUMN
Y SCAN GENERATOR
9
OS
6
SYNCHRONISATION CONTROL
CCD SEQUENCE CONTROL
CCD DETECTOR ARRAY
8
SET OF COUNTERS
CCD OUTPUT
DIGITAL FRAME STORE
GATE
VIDEO SIGNAL
12
CRT DISPLAY

SCANNING OPTICAL MICROSCOPES

The present invention relates to scanning optical microscopes. These differ from conventional microscopes in that instead of the object to be viewed being flooded with light the illumination is focused to a small spot which is scanned across the object in a raster pattern. The light is detected by a photo-sensitive detector which may be arranged to pick up either transmitted or reflected light. The detector outputs a signal which is used to build up an image in a corresponding raster pattern.

Scanning optical microscopes may be specially constructed instruments or alternatively, as in the applicants earlier specification GB-A- 2126778, may be formed by the insertion of an optical stage in a scanning electron microscope. They are used in a wide range of situations where greater resolution than that provided by conventional optical microscopes is needed, or where the image needs electronic processing for improved contrast or other signal enhancement.

The scanning optical microscope can offer superior resolution by configuring the microscope to provide confocal imaging. However, known methods of confocal imaging impose severe restraints on the design of the microscope so that in practice confocal imaging has not so far found wide application.

According to the present invention a scanning optical microscope comprises means to scan a light beam across an object, an extended photo-sensitive detector arranged to receive light from spatially separated image points on the object at correspondingly separated image points on the detector, and means to read out a signal from the extended photo-sensitive detector, the detector and the means to read out a signal from the detector

being arranged to reject substantially all signals generated by light falling outside the Airy disc of each image point to provide a confocal image of the object.

The present invention by using an extended detector rather than an apertured or "Pin Hole" detector enables confocal imaging to be used with a variety of different microscope configurations. Conventional confocal scanning optical microscopes require the use of a narrow aperture in front of the detector. The use of such systems has therefore been limited to microscope configurations in which the image is focussed to a single fixed point in space. The present invention however provides what is effectively an electronic 'aperture' scanned over the detector in synchronism with the image and so rejecting signals generated by light outside the central Airy disc. It therefore enables confocal imaging to be used with other configurations such as the SOMSEM disclosed in the specification cited above and flying spot scanners.

Preferably the scanning optical microscope is an optical stage arranged to fit in a scanning electron microscope and the means to scan a light beam across the object include an electro- luminescent device arranged to convert a scanning electron beam generated by the electron microscope into a scanning light beam.

The extended photo-sensitive detector may be a tube type camera but preferably is formed from an array of discrete semiconductor photo-sensors. Preferably the detector is arranged so that the first diffraction maximum of one of the spatially separated image points on the detector has substantially the same size as a single element of the array of photo-sensors.

A device in accordance with the present invention and the theoretical background to the present invention

are now described in detail with reference to the accompanying drawings, in which:

Figure 1 is an intensity profile of a point image;

Figure 2 is a perspective view of the illumination system of a SOMSEM suitable for use in the present invention;

Figure 3 is a side elevation of a device in accordance with the present invention;

Figures 4a - 4e are diagrams showing the clocking sequence for a detector array;

Figure 5 is a diagram showing the position of diffraction rings with respect to square detectors elements;

Figure 6 is a diagram showing the position of diffraction rings with respect to rectangular detector elements;

Figure 7 is an enlarged detail of the detector;

Figure 8 is a block diagram of an electronic control system for use in the present invention; and

Figure 9 is a diagram showing optical paths in an alternative embodiment of the present invention.

In a conventional microscope the input light is arranged to flood the object uniformly and the objective lens focuses each point on the object onto the corresponding point on the first image before final magnification by the eyepiece.

In a confocal optical system the pair of lenses forming the light spot on the object and forming the image from the object are both focused onto the same spot on the object. The spot of light formed by the illuminating lens is thus far narrower than the flood illumination in a conventional microscope. The resolution is determined by the product of two diffraction limited spots.

The resolution is improved at the expense of a drastic loss of field of view as only one point is imaged at a time. Thus the object or the optical system must be scanned to build-up a complete image.

The intensity of the image of a point source by a single thin lens is given by:

$$I \alpha \left[\frac{2 J_1 (v)}{v} \right]^2$$

where J_1 is a first order Bessel function:

and $v = \frac{2\pi a}{\lambda} . r$

where a is the aperture of the lens of focal length f, with light of wavelength, λ .

In a confocal arrangement with two equal lenses:

$$I \propto \left[\frac{2 J_1 (v)}{v}\right]^4$$

The improvement in the sharpness of the image is shown in Figure 1.

Confocal optical microscopes have been used to improve the lateral spatial resolution of reflected images and to improve the contrast in transmitted images by reducing the effect on the image of layers within the object that are not in focus.

In a normal optical microscope, a point source on the object generates a diffraction pattern at the image (due to the finite size of the objective lens) consisting of a central bright disc (the Airy disc) surrounded by light and dark rings. The Airy disc has a diameter, d, given by:

$$d = \frac{1.22 \lambda}{n \sin \theta}$$

where λ is the wavelength of the light, n is the refractive index of the medium surrounding the objective (usually n = 1), and θ is the half angle subtended by the objective at the object. Two points can just be distinguished if the centre of the Airy discs of each point lies on the first dark ring due to the other point. This analysis gives the spatial resolution as:

$$s = \frac{1.22 \lambda}{2(N.A.)}$$

where N.A. is the numerical aperture of the objective (N.A. = n sin θ). The resolution is thus limited by the wavelength of the light and the numerical aperture of the lenses that can be made.

Transmitted images are further degraded by the effect of the light passing through the parts of the object that are not in focus.

These limitations can be reduced by the confocal arrangement which limits the illumination to a single spot, eliminates the effect of the diffraction rings on the image, and imposes stricter requirements for the image formation so that the out of focus planes have little effect on the image. The improvements can only be achieved by using a scanning optical microscope (SOM) if more than one point on the object is to contribute towards the final image.

As shown in Figure 2, a scanning optical microscope includes a source of illumination 1, 13 and an objective lens 2 arranged to focus light from the source of illumination 1, 13 onto a point on an object 3. Light reflected from the object 3 returns through the objective lens 2 to a beam splitter 4. From the beam splitter 4 the light passes through a magnifying lens 5 to a corresponding point on the surface of a semiconductor image sensor 6.

In the particular embodiment described the apparatus is designed to be inserted in a conventional scanning electron microscope. The source of illumination includes a phosphor screen 13 which is scanned by the SEM. The screen 13 phosphoresces generating a beam of light which scans the object 3 in a raster pattern. As successive points on the surface of the object 3 are illuminated the magnifying lens 5 forms an image of the illuminated spot on the corresponding areas of the semi-conductor image sensor 6. The elements of the semiconductor image sensor 6 are arranged to reject light falling outside the Airy disc from each point and so form a confocal image. An electronic processor (not shown) associated with the semiconductor image sensor 6 reads

out the signals from the sensor and outputs the image to a cathode ray tube or other display device.

The semiconductor image sensor 6 consists of an array of photo-sensitive elements 17 such as charged coupled devices or photo-diodes. The most commonly available form of semiconductor image sensor the "Frame Transfer CCD" may be adapted for use in the present invention by the addition of a beam blanking unit to the SEM so that the charge generated in each element of the array by the light is not augmented by further charges whilst the packet of charge is being transferred out of the array to the Video amplifier or other processing device. As an alternative arrays of the "Interline Transfer Device" (ILT) or "MOS Imager Device" (MID) type may be used. These arrays have the advantage that they do not require a beam blanking unit. The ILT types may be those manufactured by Fairchild Weston (type CCD222) and Sony (types ICX 018 and ICX 021). Suitable MID sensors are manufactured by Hitachi (HE 97211, HE 97222, HE 98222 A, HE 98224). These sensors consist of arrays of elements 17 in columns. The light falling on each element 17 generates a packet of charge in a region transparent to the light. The charge is then transferred to vertical shift registers under an opaque shield 16 in the remainder of the element. A detail of such a sensor array is shown in Figure 7. In the particular example shown, rectangular elements 17 of 12 microns width and 18 microns length are separated by continuous shields SH 18 microns wide. Signals are read out from the array 6 in the manner shown in Figure 4. A sequence of two to four overlapping clock signals transfers the packets of charge down the vertical shift registers of each column. At the bottom of the columns each row of charges is transferred to a horizontal shift register and, via a video amplifier, to the output. Figure 4(a) shows the position

of the first three packets of charge C1,C2,C3, after three integration periods. Figures 4(b) to 4(d) show the signal from the horizontal shift register for the first, second and third rows of data respectively. The signals from the cells holding the packets of charge C1,C2,C3 are combined and any charge generated in neighbouring cells rejected to give the composite signal shown in Figure 4(e).

In order to provide confocal imaging the size of the sensitive area of each pixel of the array 6 is matched to the size of the Airy disc of each imaged point. With an array of square pixels the disc of the first diffraction maximum and the outer diffraction rings are arranged with respect to the pixels as shown in Figure 5. In this figure mimima are indicated by full lines and maxima by broken lines. The first minimum passes through the corners of a single square pixel. In general however the elements 17 of the sensor array 6 are not square and are surrounded on two or four sides by opaque regions. When arrays of this type are used the corners of each rectangular pixel are arranged to lie on the circle of the first minimum as shown in Figure 6. The position of the imaged point with respect to the pixel is adjusted by movement of the magnifying lens 5.

While the beam is on a given pixel of the array 6 the signals generated in all other cells must be rejected. Signals are initially generated in these cells and move along the columns and out via the horizontal shift register. By moving the beam to the next pixel after exactly one integration period the output of the detector is such that the peak signal collected at each pixel corresponds to the Airy disc alone at that position. Then if the integration period is made equal to the vertical shift register period each row of data emerging from the horizontal shift register contains only

one cell of information that is used for the basic image formation, as shown in Figure 4. Each row extracted by the horizontal shift register only contains the signal from one pixel corresponding to an Airy disc. All the other data is rejected to form a final signal containing only the peak signals corresponding to the Airy discs. A gate on the output from the image sensor is used to pass only those sections of the signal that are required for the confocal image. If the integration period at each cell is T and there are N rows and M columns, the total time to generate a confocal image is MNT.

The control system is shown in more detail in the block diagram of figure 8. The optical system OS is aligned with the SEM column. A control unit 8 provides clock signals which control the scan generators 9, 10 of the SEM to synchronise the scan rate with the detection and display of the confocal images. A CCD sequence control, 11 controls the operation of the detector array 6 and the gating of signals read from the array 6. The signals are output to a video display system 12.

In an alternative embodiment a tube camera such as an image orthicon, image isocon or vidicon is used. The tube is scanned in synchronisation with the source of illumination 1 and is arranged so that only a single pixel corresponding to one Airy disc contributes to the image at a given instant. The response time and decay time of a tube are arranged to be sufficiently short that the signal at each point is due solely to the central point of the image for that point without diffraction images due to neighbouring points.

In a further alternative embodiment of the present invention shown in Figure 9, a scanning optical microscope in which the source of illumination 1 is a laser is adapted for confocal operation. Light from the laser 1 passes through a beam expander 18 and a beam

splitter to the scanner unit 7. In addition to the primary illumination from the laser 1 the system includes sources of incident light illumination 22 and transmitted light illumination 23. An incident light detector 20 and associated filter 19 are positioned upstream of the scanner unit 7. The semiconductor image sensor 6 is substituted in place of the PMT otherwise used to detect transmitted light. In addition an image from the optical system OS can be viewed directly at an eyepiece 21. The operation of the x-y scanner unit 7 is synchronised with the reading out of signals from the elements of the sensor 6 in a manner precisely analogous to that described above for SOMSEM systems.

CLAIMS

1. A scanning optical microscope comprising means to scan a light beam across an object, an extended photo-sensitive detector arranged to receive light from spatially separated points on the object at correspondingly separated image points on the detector, and means to read out a signal from the extended photo-sensitive detector, the detector and the means to read out a signal from the detector being arranged to reject substantially all signals generated by light falling outside the Airy disc of each image to provide a confocal image point of the object.

2. A scanning optical microscope according to claim 1, in which the scanning optical microscope is an optical stage arranged to fit in a scanning electron microscope and the means to scan a light beam across the object include an electro-luminescent device arranged to convert a scanning electron beam generated by the electron microscope into a scanning light beam.

3. A scanning optical microscope according to claim 1 or 2, in which the photo-sensitive detector comprises an array of discrete semiconductor photo-sensors.

4. A scanning optical microscope according to claim 3 in which the photo-sensitive detector is arranged so that the first diffraction maximum of one of the spatially separated image points on the detector has substantially the same size as a single element of the array of semiconductor photo-sensors.

5. A scanning optical microscope according to claim 1 or 2, in which the photo-sensitive detector comprises a tube camera.

6. A scanning optical microscope according to claim 1, in which the means to scan a light beam include a laser and means to scan a beam output by the laser.

7. A scanning electron microscope scanning optical microscope system including a scanning optical microscope according to claim 2, or any one of claims 3 to 5 when dependent on claim 3, installed in the path of the electron beam.

8. A scanning optical microscope substantially as described with respect to figures 2 to 9 of the accompanying drawings.

Published 1989 at The Patent Office, State House, 66 71 High Holborn, London WC1R 4TP. Further copies may be obtained from The Patent Office. Sales Branch, St Mary Cray, Orpington, Kent BR5 3RD. Printed by Multiplex techniques ltd, St Mary Cray, Kent, Con. 1/87