(12) INTERNATIONAL APPLICATION PUBLISHED UNDER THE PATENT COOPERATION TREATY (PCT)

(19) World Intellectual Property Organization
International Bureau

(43) International Publication Date
21 July 2005 (21.07.2005)

PCT

(10) International Publication Number
WO 2005/066667 A1

(51) International Patent Classification[7]: G02B 5/128

(21) International Application Number:
PCT/US2004/043549

(22) International Filing Date:
28 December 2004 (28.12.2004)

(25) Filing Language: English

(26) Publication Language: English

(30) Priority Data:
60/533,962 30 December 2003 (30.12.2003) US

(71) Applicant: **3M INNOVATIVE PROPERTIES COMPANY** [US/US]; 3M Center, Post Office Box 33427, Saint Paul, MN 55133-3427 (US).

(72) Inventors: **FLEMING, Robert, J.**; Post Office Box 33427, Saint Paul, MN 55133-3427 (US). **LYONS, Christopher, S.**; Post Office Box 33427, Saint Paul, MN 55133-3427 (US). **MCGRATH, Joseph, M.**; 8120 Demontreville Trail North, Lake Elmo, MN 55042 (US). **RAMOS, Jesus, R.**; 4202 S. Santa Rita Avenue, Tucson, AZ 85714 (US). **ROEHRIG, Mark, A.**; Post Office Box 33427, Saint Paul, MN 55133-3427 (US). **BRIGHT, Clark, I.**; 4202 S. Santa Rita Avenue, Tucson, AZ 85714 (US).

(74) Agents: **PRALLE, Jay, R.** et al.; Office of Intellectual Property Counsel, Post Office Box 33427, Saint Paul, MN 55133-3427 (US).

(81) Designated States *(unless otherwise indicated, for every kind of national protection available)*: AE, AG, AL, AM, AT, AU, AZ, BA, BB, BG, BR, BW, BY, BZ, CA, CH, CN, CO, CR, CU, CZ, DE, DK, DM, DZ, EC, EE, EG, ES, FI, GB, GD, GE, GH, GM, HR, HU, ID, IL, IN, IS, JP, KE, KG, KP, KR, KZ, LC, LK, LR, LS, LT, LU, LV, MA, MD, MG, MK, MN, MW, MX, MZ, NA, NI, NO, NZ, OM, PG, PH, PL, PT, RO, RU, SC, SD, SE, SG, SK, SL, SY, TJ, TM, TN, TR, TT, TZ, UA, UG, US, UZ, VC, VN, YU, ZA, ZM, ZW.

(84) Designated States *(unless otherwise indicated, for every kind of regional protection available)*: ARIPO (BW, GH, GM, KE, LS, MW, MZ, NA, SD, SL, SZ, TZ, UG, ZM, ZW), Eurasian (AM, AZ, BY, KG, KZ, MD, RU, TJ, TM), European (AT, BE, BG, CH, CY, CZ, DE, DK, EE, ES, FI,

[Continued on next page]

(54) Title: COLOR SHIFTING RETROREFLECTOR AND METHOD OF MAKING SAME

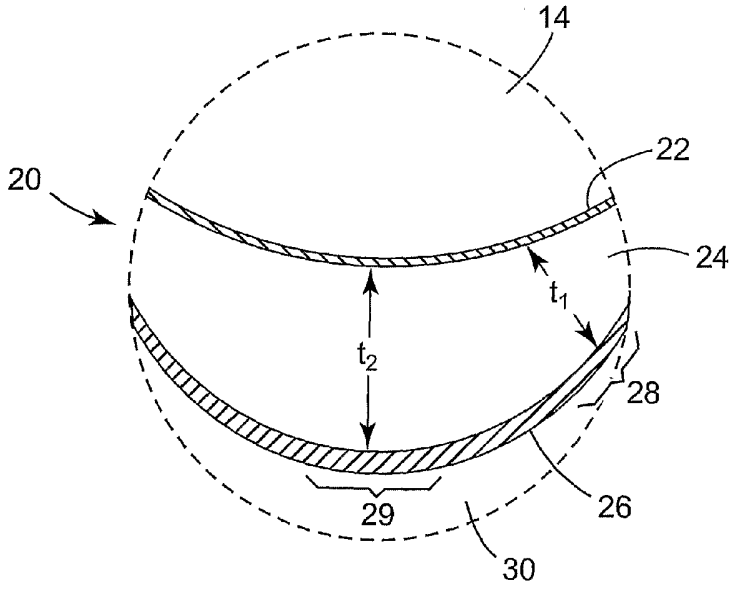

(57) Abstract: Color shifting retroreflective articles can provide features such as decorative effects, evidence of tampering, security authentication or positional information. In some embodiments, the color shifting retroreflective article includes a layer of microspheres (14), and a reflective coating that is disposed in optical association with the layer of microspheres. The reflective coating includes a spacer layer (24) disposed between a semitransparent first reflective layer (22) and a second reflective layer (26). The first reflective layer includes a reflective layer disposed adjacent the layer of microspheres (t1, t2). At least one layer of the reflective coating includes a non-uniform thickness associated with each of a plurality of microspheres such that light incident on the article from a first direction is retroreflected at a first color and light incident on the article from a second direction is retroreflected at a second color visibly different from the first color.

WO 2005/066667 A1

FR, GB, GR, HU, IE, IS, IT, LT, LU, MC, NL, PL, PT, RO, SE, SI, SK, TR), OAPI (BF, BJ, CF, CG, CI, CM, GA, GN, GQ, GW, ML, MR, NE, SN, TD, TG).

For two-letter codes and other abbreviations, refer to the "Guidance Notes on Codes and Abbreviations" appearing at the beginning of each regular issue of the PCT Gazette.

Published:

— *with international search report*

COLOR SHIFTING RETROREFLECTOR AND METHOD OF MAKING SAME

Background

[0001] Retroreflective articles have the ability to redirect obliquely incident light back towards the light source. This unique ability has led to the wide-spread use of retroreflective articles on various substrates. For example, retroreflective articles can be used on flat inflexible substrates, such as road signs and barricades; on irregular surfaces, such as corrugated metal truck trailers, license plates, and traffic barriers; and on flexible substrates, such as road worker safety vests, a jogger's shoes, roll up signs, and canvas-sided trucks.

[0002] One type of retroreflective article includes beads. Such beaded articles commonly use a multitude of glass or ceramic microspheres to retroreflect incident light. Typically, the microspheres are partially embedded in a support film, and a specular reflecting material is provided between the layer of microspheres and the support film. The reflecting material can be a metal layer (for example, an aluminum coating as disclosed in U.S. Patent Nos. 3,700,478 (Bingham `478) and 4,648, 932 (Bailey)), an inorganic dielectric mirror made up of multiple layers of inorganic materials that have different refractive indices (for example as disclosed in U.S. Patent Nos. 3,700,305 (Bingham `305) and 4,763,985 (Bingham `985)) or an organic reflective coating made up of multiple polymer layers that have different refractive indices (for example as disclosed in U.S. Patent No. 6,172,810 B1 (Fleming et al. `810)).

[0003] Categories of beaded retroreflective articles include exposed lens, enclosed lens, and encapsulated lens types. Exposed lens beaded articles have a layer of microspheres, the front sides of which are exposed to the environment. Enclosed lens beaded articles have a protective layer such as a transparent polymer resin contacting and surrounding the front side of the microspheres. Encapsulated lens articles have an air gap surrounding the front side of the microspheres and a transparent film hermetically sealed to a support film to protect the microspheres from water, dirt, or other environmental elements.

[0004] Other references involving optical articles include U.S. Patent Nos. 5,877,895 (Shaw et al. '895) and 6,083,628 (Yializis).

Summary

[0005] When an untinted retroreflective article is viewed at normal or near-normal observation angles with white light, the retroreflected image usually is also white. When viewed at highly oblique angles near the article's angular limit for retroreflectivity, the image may exhibit some color fringing, an effect normally regarded as undesirable. However, if the retroreflective article is made to exhibit perceptible color shifting at observation angles less than the article's angular limit for retroreflectivity, the resulting color effects can provide useful features including decorative effects, evidence of tampering, security authentication or positional information. For example, the visibility and conspicuity of an object can be enhanced by not only retroreflecting light back to its source, but also by making the color of the retroreflected light dependent on information about the object, such as its orientation to the light source and the object's color shifting properties.

[0006] In one aspect, the present disclosure provides a color shifting retroreflective article that includes a layer of microspheres, and a reflective coating disposed in optical association with the layer of microspheres. The reflective coating includes an at least partially transparent spacer layer disposed between a semitransparent first reflective layer and a second reflective layer. The first reflective layer may be disposed, for example, adjacent and between the layer of microspheres and the spacer layer. The second reflective layer may be semitransparent or opaque and may be disposed, for example, adjacent the spacer layer. At least one layer of the reflective coating includes a non-uniform thickness associated with each of a plurality of microspheres such that light incident on the article from a first direction is retroreflected at a first color and light incident on the article from a second direction is retroreflected at a second color visibly different from the first color.

[0007] In another aspect, the present disclosure provides a color shifting retroreflective article that includes a layer of microspheres, and a reflective coating that is disposed in optical association with the layer of microspheres. The reflective coating includes a semitransparent first reflective layer adjacent the layer of microspheres. The reflective

coating also includes an at least partially transparent spacer layer adjacent the first reflective layer, and a second reflective layer adjacent the spacer layer such that the spacer layer is between the first and second reflective layers. The reflective coating reflects visible light non-uniformly, and a predetermined first area of the reflective coating associated with each microsphere of at least a plurality of microspheres includes a first thickness and a predetermined second area of the reflective coating associated with each microsphere of at least a plurality of microspheres includes a second thickness different from the first thickness.

[0008] In one aspect, the present disclosure provides a color shifting retroreflective article that exhibits a visually perceptible change in the color of retroreflected light at observation angles not near the article's angular limit for retroreflectivity.

[0009] In another aspect, the present disclosure provides a method for making a color shifting retroreflective article that includes providing a layer of microspheres, and forming a reflective coating in optical association with the layer of microspheres. Forming the reflective coating includes depositing a semitransparent first reflective layer adjacent the layer of microspheres. Forming the reflective coating further includes depositing an at least partially transparent spacer layer on the first reflective layer, and depositing a second reflective layer on the spacer layer. The reflective coating is formed to provide for each of a plurality of microspheres a non-uniform thickness in at least one of the respective layers of the reflective coating such that light incident on the article from a first direction is retroreflected at a first color and light incident on the article from a second direction is retroreflected at a second color visibly different from the first color.

[0010] In another aspect, the present disclosure provides a method for making a color shifting retroreflective article that includes providing a layer of microspheres, and forming a reflective coating in optical association with the layer of microspheres. Forming the reflective coating includes depositing a semitransparent first reflective layer adjacent the layer of microspheres. Forming the reflective coating further includes depositing an at least partially transparent spacer layer on the first reflective layer, and depositing a second reflective layer on the spacer layer such that the spacer layer is between the first and second reflective layers. The reflective coating reflects visible light non-uniformly, where a predetermined first area of the reflective coating associated with each microsphere of at

least a plurality of microspheres includes a first thickness and a predetermined second area of the reflective coating associated with each microsphere of the at least a plurality of microspheres includes a second thickness different from the first thickness.

[0011] The above summaries are not intended to describe each disclosed embodiment or every implementation of the present invention. The Figures and the Detailed Description that follow more particularly exemplify illustrative embodiments.

Brief Description of the Drawing

[0012] **FIG. 1** is a cross-sectional schematic diagram of one embodiment of a portion of a color shifting retroreflective article.

[0013] **FIG. 2** is an enlarged schematic view of a portion of a microsphere taken from region **2** of **FIG. 1**.

[0014] **FIG. 3** is a schematic diagram of one embodiment of a coating apparatus.

[0015] **FIG. 4** is a chromaticity diagram using CIE x-y chromaticity coordinates for the color shifting retroreflective article of the Example.

[0016] **FIG. 5** is a photograph of a portion of the color shifting retroreflective article of the Example taken using scanning electron microscopy.

Detailed Description

[0017] **FIG. 1** is a cross-sectional schematic diagram of a portion of one embodiment of a beaded retroreflective article **10**. The retroreflective article **10** includes optical elements in the form of a layer of microspheres **12** partially embedded in a binder layer **30**. A reflective coating **20** is disposed between the layer of microspheres **12** and the binder layer **30** such that the reflective coating **20** is in optical association with the layer of microspheres **12**. As used herein, the term "optical association" refers to the reflective coating **20** being positioned relative to the layer of microspheres **12** such that a significant portion of light transmitted through each microsphere **14** can strike the reflective coating **20** and be reflected back into the microsphere **14**. Optional substrate layer **40** can be used to add structural support. The beaded retroreflective article **10** as illustrated in **FIG. 1** is typically referred to as an "exposed lens" beaded retroreflective article. An "exposed lens" beaded retroreflective article is one where the optical elements, in this case microspheres

14, are exposed to the ambient environment, namely air. Optionally, a cover layer (not shown) may be disposed over at least a portion of the layer of microspheres **12** opposite the reflective coating **20** such that it covers or encapsulates the exposed portions of the microspheres **14** to make "enclosed lens" or "encapsulated lens" beaded retroreflective articles. Examples of exposed lens articles are described, e.g., in Bingham '478; Bingham '985 and in U.S. Patent No. 5,812,317 (Billingsley et al.). Examples of encapsulated lens products are described, e.g., in U.S. Patent Nos. 4,896,943 (Tolliver et al.); 5,066,098 (Kult et al.) and 5,784,198 (Nagaoka).

[0018] The microspheres **14** used in a beaded product of the disclosure preferably are substantially spherical in shape to provide uniform and efficient retroreflection. The microspheres **14** preferably also are highly transparent to minimize light absorption so that a large percentage of incident light is retroreflected. The microspheres **14** often are substantially colorless but may be tinted or colored in some other fashion. The microspheres **14** may be made from glass, a non-vitreous ceramic composition, or a synthetic resin. In general, glass and ceramic microspheres are preferred because they tend to be harder and more durable than microspheres made from synthetic resins. Examples of microspheres that may be useful are disclosed in U.S. Patent Nos. 1,175,224 (Bleeker); 2,461,011 (Taylor et al.); 2,726,161 (Beck et al. '161); 2,842,446 (Beck et al. '446); 2,853,393 (Beck et al. '393); 2,870,030 (Stradley et al.); 2,939,797 (Rindone); 2,965,921 (Bland); 2,992,122 (Beck et al. '122); 3,468,681 (Jaupain); 3,946,130 (Tung et al. '130); 4,192,576 (Tung et al. '576); 4,367,919 (Tung et al. '919); 4,564,556 (Lange '556); 4,758,469 (Lange '469); 4,772,511 (Wood et al. '511) and 4,931,414 (Wood et al. '414).

[0019] The microspheres **14** typically have an average diameter of about 10 to 500 μm. It may be preferred that the microspheres have an average diameter of about 20 to 250 μm. Microspheres smaller than these ranges tend to provide lower levels of retroreflection, and microspheres larger than these ranges may impart an undesirably rough texture to the retroreflective article **10** or may undesirably reduce its flexibility in embodiments in which such flexibility is a desired property. Microspheres **14** used in the present disclosure typically have a refractive index of about 1.2 to 3.0. It may be preferred that the microspheres **14** have a refractive index of about 1.6 to 2.7. It may be more preferred that the microspheres **14** have a refractive index of about 1.7 to 2.5.

[0020] The layer of microspheres **12** is partially embedded in binder layer **30** such that the binder layer **30** is adjacent the reflective coating **20**. Binder layer **30** may include any suitable material or materials, e.g., polymers such as acrylics, urethanes, epoxies, rubber, olefins, polyvinyl chloride, ethylene vinylacetate copolymers or polyesters. The binder layer **30** may be formed using any suitable technique as is further described, e.g., in Billingsley et al. `317. In some embodiments, the reflective coating **20** or one of the layers of the reflective coating **20** may act as the binder layer such that a separate binder layer **30** is not included in the article **10**.

[0021] **FIG. 2** shows a magnified view of a portion of the microsphere **14** indicated by region **2** in **FIG. 1**. Reflective coating **20** includes a first reflective layer **22**, a second reflective layer **26**, and a transparent spacer layer **24** disposed between the first reflective layer **22** and second reflective layer **26**. The first reflective layer **22** may be made, for example from one or more metals in one or more layers and is thin enough to be semitransparent. As used herein, the term "semitransparent" when used with respect to a reflective layer refers to a layer that is partially reflective and partially transmissive for visible light. As used herein, the term "metal" refers to elemental metals and metal alloys. Examples of suitable metals include aluminum, chromium, nickel, nickel-chromium alloy, stainless steel, silver. The first reflective layer **22** may also be a stack of layers each containing one or more inorganic or organic materials, with two or more such layers having refractive indices that differ sufficiently to reflect light. As used herein, the phrase "organic materials" refers to monomers, oligomers and polymers of organic or organometallic materials. Examples of suitable inorganic materials are described, e.g., in Bingham `305 and Bingham `985. Examples of suitable organic materials are described, e.g., in Bingham `305, Bingham `985 and Fleming et al. `810. Thus in some embodiments, the first reflective layer **22** is a single metal layer; in other embodiments, the first reflective layer **22** can include multiple layers. In some embodiments, the first reflective layer **22** is at least 25% transparent. In some embodiments, the first reflective layer **22** is about 50% transparent and 50% reflective. In some embodiments, the first reflective layer **22** has a thickness that is at least about 3 nm. In some embodiments, the first reflective layer **22** has a thickness that is less than about 200 nm.

[0022] Although **FIG. 2** illustrates the first reflective layer **22** as being positioned on and in contact with the microsphere **14**, one or more additional layers may be positioned between the first reflective layer **22** and the layer of microspheres **12**. For example, an intermediate layer or layers may be included between the layer of microspheres **12** and the first reflective layer **22** of the reflective coating **20**. Such intermediate layers are described, e.g., in Billingsley et al. '317. Such intermediate layers may be used in retroreflective articles to improve the retroreflection optics. Depending on the index of refraction of the microspheres **14**, and whether the article is an exposed lens retroreflector or an encapsulated retroreflector, these intermediate layers are on the order of 10 μm thick and can be used to place the reflective coating **20** at the focal point of the microsphere **14**.

[0023] The second reflective layer **26** may be positioned on the spacer layer **24** opposite the first reflective layer **22**. Although **FIG. 2** illustrates the second reflective layer **26** as being positioned on and in contact with the spacer layer **24**, one or more additional layers may be positioned between the second reflective layer **26** and the spacer layer **24**. The second reflective layer **26** may also include any suitable metal or metals, e.g., aluminum, chromium, nickel, nickel-chromium alloy, stainless steel, silver, and may also be formed from a stack of layers each containing one or more inorganic or organic materials, with two or more such layers having refractive indices that differ sufficiently to reflect light. Thus in some embodiments, the second reflective layer **26** includes a single layer; in other embodiments, the second reflective layer **26** may include multiple layers. In some embodiments, the second reflective layer **26** is substantially opaque. In some embodiments, the second reflective layer **26** has a thickness that is at least about 20 nm. In some embodiments, the second reflective layer **26** has a thickness that is less than about 200 nm. In some embodiments, the second reflective layer **26** may also be the binder layer **30**.

[0024] The first reflective layer **22** and the second reflective layer **26** may be formed or deposited using any suitable technique, e.g., vacuum metallization, sputter coating, evaporation, chemical vapor deposition (CVD), and plasma enhanced CVD. These and other suitable techniques will be familiar to those skilled in the art.

[0025] In some embodiments, the color shifting retroreflective article **10** may include one or more additional layers. For example, an adhesion promoter may be provided

between the layer of microspheres **12** and the reflective coating **20** as is further described herein. Other exemplary additional layers may contain silane coupling agents for adhesion promotion as is described, e.g., in U.S. Patent No. 5,976,669 (Fleming).

[0026] Disposed between the first reflective layer **22** and the second reflective layer **26** is the spacer layer **24**. The spacer layer **24** may include any suitable at least partially transparent material or materials, e.g., inorganic dielectric materials such as metal oxides, nitrides, oxynitrides, carbides, fluorides, and borides; or solid organic materials including molecules, oligomers, and polymers. In some embodiments, the spacer layer **24** can include a dielectric material. In some embodiments, the spacer layer **24** can include a monolithic acrylate polymer. The spacer layer **24** may include one or more layers.

[0027] In the embodiment illustrated in **FIG. 2**, the spacer layer **24** has a non-uniform thickness associated with one or more microspheres **14** in the layer of microspheres **12**. The average thickness of the spacer layer **24** can for example be at least about 70 nm. In some embodiments, the spacer layer **24** can have an average thickness that is less than about 1000 nm.

[0028] The spacer layer **24** may be formed using any suitable technique, e.g., evaporation, plasma deposition, solution coating, extrusion coating, gravure coating, or spray coating. These and other suitable techniques will be familiar to those skilled in the art. In some embodiments, the spacer layer **24** is formed using flash evaporation as is further described herein.

[0029] In some embodiments, at least one layer of the reflective coating **20** includes a non-uniform thickness associated with each microsphere **14** of a plurality of microspheres of the layer of microspheres **12**. Such non-uniform thickness enables light incident on the color shifting retroreflective article **10** from a first direction to retroreflect at a first color and light incident on the article **10** from a second direction to retroreflect at a second color visibly different from the first color.

[0030] For example, as shown in **FIG. 1**, incident light **I** that enters a microsphere **14** from a first direction (which in this case is approximately perpendicular to layer **12**) can be refracted toward the center of the microsphere **14**, reflected off the reflective coating **20** behind the microsphere **14**, and redirected out of the microsphere **14** in the general direction of the incident light, as indicated by reflected light beam **R**. When the incident

light **I** encounters the front of the reflective coating **20**, a portion of the light is reflected by the first reflective layer **22**, and another portion passes through the first reflective layer **22** and into the spacer layer **24**. At least a portion of the transmitted light is then reflected by the second reflective layer **26** and retransmitted through the spacer layer **24**. At least a portion of the retransmitted light passes through the first reflective layer **22**, where it may constructively or destructively interfere with the portion of light that was reflected by the first reflective layer **22**. As also as shown in **FIG. 1**, incident light **I'** that enters a microsphere **14** from a second direction (which in this case is oblique with respect to layer **12** but not near the angular limit for retroreflectivity) can be refracted toward the center of the microsphere **14**, reflected off the reflective coating **20** behind the microsphere **14**, and redirected out of the microsphere **14** in the general direction of the incident light, as indicated by reflected light beam **R'**. Incident light **I** and reflected beam **R** travel through a different thickness in reflective coating **20** compared to incident light **I'** and reflected beam **R'**, thereby causing the color of reflected beam **R'** to differ visibly from the color of reflected beam **R**. This color effect can be visually perceived at observation angles less than the angular limit for retroreflectivity, e.g., by changing the observation angle from direction **I** to direction **I'**.

[0031] In the embodiment illustrated in **FIGS. 1-2**, the spacer layer **24** includes a non-uniform thickness. In some embodiments, the first reflective layer **22** or the second reflective layer **26** may include a non-uniform thickness. In such embodiments, the article may exhibit not only an angular-dependent shift in color but also an angular-dependent shift in the intensity of retroreflected light. In other embodiments, more than one layer of the reflective coating **20** may include a non-uniform thickness. For example, as shown in **FIG. 2**, the reflective coating **20** may include a first area **28** where the spacer layer **24** has an average thickness **t1** as measured along a radial from near the center of the microsphere **14**. In a second area **29** of the reflective coating **20**, the spacer layer **24** may have an average thickness **t2**. In the embodiment shown in **FIG. 2**, thickness **t2** is greater than thickness **t1**.

[0032] The thickness of one or more of the layers of the reflective coating **20** may vary in any suitable manner to produce a non-uniform thickness. For example, the thickness may follow a thickness gradient. In the embodiment shown in **FIG. 2**, spacer layer **24** has

a non-uniform thickness variation having a crescent-like cross-sectional shape behind the microsphere **14**.

[0033] The thickness of the spacer layer **24** may be a small multiple of a quarter wavelength of light for constructive interference (allowing for the index of refraction of the dielectric material). When light is retroreflected through such a spacer layer, light with the appropriate wavelength may have the reflected and transmitted beams in phase for constructive interference. Light of other colors may have at least partial destructive interference. When an article **10** with such a spacer layer **24** is observed at a fixed angle in white light, the article **10** may reflect a strong characteristic color, e.g., blue or green. The spacer layer **24** may also have a thickness such that the article **10** will retroreflect colored light when illuminated at normal incidence with white light. This combination of retroreflection and color may make it easier to perceive the article, and when combined with the disclosed color shifting can make the article and its position or condition much more conspicuous than if the article functioned merely as a diffuse or specular white or colored reflector.

[0034] The color reflected from the article **10** can depend on the optical path length of light passing through a microsphere **14** and its respective reflective coating **20**. When the article **10** is observed with light at substantially normal incidence (i.e., substantially normal to the layer of microspheres **12** of **FIG. 1**), a certain color, e.g., green, is seen. As described herein, a portion of light incident substantially normal to the layer of microspheres **12** of article **10** will pass through the first reflective layer **22** and traverse the spacer layer **24** proximate second area **29** of the article **10**. In second area **29**, the spacer layer has an average thickness **t2**. The light will, therefore, travel approximately two times thickness **t2** before a portion passes back through the first reflective layer **22** and the microsphere **14**. When the angle of incidence and reflection from the article **10** is oblique rather than normal, the total optical path length through the reflective coating **20** is shorter in the embodiment illustrated in **FIG. 2**, because at least a portion of light entering at an oblique angle traverses a reduced thickness region of spacer layer **24** such as the region proximate first area **28** where the spacer layer **24** has an average thickness **t1** that is less than thickness **t2**. Thus, when the article **10** is observed at an oblique angle, a shorter wavelength color, for example, blue, can be observed.

[0035] In other words, light incident on the article **10** from a first direction is reflected at a first color and light incident on the article **10** from a second direction is retroreflected at a second color that can be visibly different from the first color. The color shifting retroreflective article **10**, therefore, reflects light non-uniformly. It may be preferred that the first direction is substantially normal to the layer of microspheres **12**. Further, it may be preferred that the first and second direction differ by at least 10°. It may be more preferred that the first and second direction differ by at least 30°.

[0036] In general, color may be measured using the CIE 1931 Standard Colorimetric System. This system uses a two-dimensional diagram that includes points specified by chromaticity coordinates (x,y), which represent the chromaticities of color stimuli in the CIE color matching system. The color of an article or region of an article can be specified by a point (x,y) or region (expressed in terms of more than one chromaticity coordinate (x,y)) on the CIE chromaticity diagram (see, e.g., **FIG. 4**). The first and second colors reflected by the color shifting retroreflective article **10** can be characterized by CIE chromaticity coordinates (x1y1), (x2y2), respectively. It may be preferred that the greater of | x2-x1| and |y2-y1| is at least 0.05. It may be more preferred that the greater of | x2-x1| and |y2-y1| is at least 0.1. *See*, e.g., J.A. Dobrowolski et al., "Research on thin film anticounterfeiting coatings at the National Research Council of Canada," Applied Optics, 28(14):2702-2717 (1989); and Shaw et al. '895.

[0037] The layers used in the reflective coating **20** to form the spacer layer **24** can be disposed in optical association with the layer of microspheres **12** using techniques now known or later developed which are suitable for disposing layers of materials that have desired thicknesses. Such techniques can include solvent-borne coating techniques, liquid reactive coating techniques, extrusion coating techniques, gravure coating techniques, physical and chemical vapor deposition techniques, plasma deposition techniques, film lamination techniques, and the like.

[0038] Exemplary techniques of coating polymer layers include the pre-polymer vapor deposition methods taught in U.S. Patent No. 6,503,564 (Fleming et al. '564). Briefly, these methods involve condensing a pre-polymer vapor onto a structured substrate, and curing the material on the substrate. These methods can be used to form polymer coatings that have controlled chemical composition and that preserve the underlying profile of the

structured substrate. Multiple coatings of the same or different material can be applied in this fashion to form a spacer layer in a reflective coating.

[0039] Preferred methods of making reflective coatings in optical association with the layer of microspheres of the color shifting retroreflective articles of the present disclosure can include aspects of the coating process shown in **FIG. 3**. The process can be performed at atmospheric pressure, optionally enclosing the coating region in a chamber **118** (e.g., for providing a clean environment, for providing an inert atmosphere, or for other such reasons), or at reduced pressure where chamber **118** is a vacuum chamber.

[0040] As shown in **FIG. 3**, color shifting retroreflective article **112** is provided in chamber **118**. Color shifting retroreflective article **112** may include any suitable color shifting retroreflective article as described herein. Color shifting retroreflective article **112** may include a layer of microspheres attached to a carrier film as is described, e.g., in U.S. Patent No. 6,355,302 (Vandenberg et al.). The layer of microspheres may include microspheres **111**. In some embodiments, article **112** may include a first reflective layer (e.g., first reflective layer **22** of **FIG. 2**) formed prior to placement of the color shifting retroreflective article **112** in the chamber **118**. Alternatively, an optional deposition station **130** (e.g., a metallization station) may be included in chamber **118** to deposit a first reflective layer adjacent the layer of microspheres using any suitable technique, e.g., vacuum metallization, sputtering, evaporation, chemical vapor deposition (CVD), and plasma enhanced CVD.

[0041] Prior to deposition of the first reflective layer, the layer of microspheres may be treated to promote adhesion of the first reflective layer to the layer of microspheres. Any suitable technique may be used to treat the layer of microspheres, e.g., plasma treatment, corona treatment, flame treatment, or UV/ozone treatment. Further, one or more intermediate layers may be formed on the layer of microspheres prior to deposition of the first reflective layer as is further described herein.

[0042] A spacer layer (e.g., spacer layer **24** of **FIG. 2**) is then deposited on the first reflective layer using coating material **100**. Coating material **100**, supplied in the form of a liquid monomer or pre-polymer, can be metered into evaporator **102** via pump **104**. As described in detail herein, the coating material **100** can be evaporated by one of several techniques, including flash evaporation and carrier gas collision vaporization. It may be

preferred that the coating material **100** is atomized into fine droplets through optional nozzle **122**, the droplets being subsequently vaporized inside evaporator **102**. Optionally, a carrier gas **106** can be used to atomize the coating material **100** and direct the droplets through nozzle **122** into evaporator **102**. Vaporization of the liquid coating material **100**, or droplets of the liquid coating material **100**, can be performed via contact with the heated walls of the evaporator **102**, contact by the optional carrier gas **106** (optionally heated by heater **108**), or contact with some other heated surface. Any suitable operation for vaporizing the liquid coating material **100** is contemplated for use in this disclosure.

[0043] After vaporization, the coating material **100** can be directed through a coating die **110** and onto the first reflective layer of color shifting retroreflective article **112**. A mask (not shown) can optionally be placed between the coating die **110** and the color shifting retroreflective article **112** to coat selected portions of the first reflective layer. Optionally, the surface of the first reflective layer can be pretreated using an electrical discharge source **120**, such as a glow discharge source, silent discharge source, corona discharge source, or the like. The pretreatment step is optionally performed to modify the surface chemistry, for example, to improve adhesion of coating material **100** to the first reflective layer, or for other such purposes. In addition, the layer of microspheres, the surface of the first reflective layer, or both can optionally be pretreated with an adhesion promoter, as discussed herein.

[0044] It may be preferred that the color shifting retroreflective article **112** is maintained at a temperature at or below the condensation temperature of the monomer or pre-polymer vapor exiting the coating die **110**. Color shifting retroreflective article **112** can be placed on, or otherwise disposed in temporary relation to, the surface of drum **114**. The drum **114** allows the retroreflective article **112** to be moved past the coating die **110** at a selected rate to control the layer thickness. The drum **114** can also be maintained at a suitable bias temperature to maintain the retroreflective article **112** at or below the pre-polymer vapor's condensation temperature. After condensing the curing material **100** on the article **112**, the liquid monomer or pre-polymer layer can be cured to form the spacer layer. Curing the material generally involves irradiating the material on the substrate using visible light, ultraviolet radiation, electron beam radiation, ion radiation or free radicals (as from a plasma), or heat or any other suitable technique. When the article **112** is mounted

on a rotatable drum **114**, a radiation source **116** preferably is located downstream from the monomer or pre-polymer vapor source so that the coating material **100** can be continuously applied and cured on the surface of the first reflective layer. Multiple revolutions or passes of the substrate can be employed to successively deposit and cure monomer vapor onto layers that were deposited and cured during previous revolutions. In some embodiments, the spacer layer may be cured after the second reflective layer is deposited on the spacer layer as is further described herein.

[0045] After the coating material **100** is cured by radiation source **116** to form the spacer layer, the color shifting retroreflective article **112** passes an optional deposition station **140** (e.g., a metallization station) where a second reflective layer (e.g., second reflective layer 26 of **FIG. 2**) may be deposited on the spacer layer using any suitable technique, e.g., vacuum metallization, sputtering, evaporation, chemical vapor deposition (CVD), and plasma enhanced CVD. Alternatively, the second reflective layer may be deposited by reversing drum **114** and employing deposition station **130**. The second reflective layer may also be deposited after the color shifting retroreflective article **112** has been removed from the chamber **118**. After depositing the second reflective layer, a binder layer or a substrate may be formed on the reflective coating opposite the layer of microspheres as is further described herein.

[0046] Those skilled in the art will appreciate that the apparatus shown in **FIG. 3** may be modified to apply the first or second reflective layers as a stack of layers each containing one or more inorganic or organic materials, with two or more such layers having refractive indices that differ sufficiently to reflect light. Those skilled in the art will also appreciate that the apparatus shown in **FIG. 3** may be modified to apply additional coating materials as desired. For example, inorganic, organometallic, or non-polymeric layers may be deposited using suitable methods, now known or later developed, including sputtering, chemical vapor deposition, electroplating, condensing from a solvent, and other such methods. These additional layers may be deposited directly on the layer of microspheres before the first reflective layer is deposited, after the first reflective layer is deposited, or after the spacer layer is deposited.

[0047] In some embodiments, an adhesion promoter can be coated between the layer of microspheres and the reflective coating or between the first reflective layer and the

spacer layer. Adhesion promoters can be selected to improve interlayer adhesion, e.g., between the reflective coating and the layer of microspheres or between the first reflective layer and the spacer layer. For example, a silane coupling agent can be used that promotes adhesion between polymer layers of the multilayer reflective coatings of the present disclosure and optical elements which can be, for example, glass or ceramic microspheres. Exemplary silane coupling agents include aminopropyltriethoxysilane, glycidoxypropyltrimethoxysilane, methacryloxypropyltrimethoxysilane, and vinyltrimethoxysilane. Also, titanate coupling agents can be used as adhesion promoters, examples of which include isopropyl tri(dioctyl)phosphato titanate, dimethacryloxoethylene titanate, and titanium(tetraisopropoxide). Silazanes such as hexamethyldisilazane can also be used as adhesion promoters. Examples of silane coupling agents are disclosed in U.S. Patent No. 5,200,262 (Li).

[0048] Apparatuses suitable for carrying out various aspects of the method illustrated in **FIG. 3** are described, for example, in Fleming et al. `564 and in U.S. Patent Nos. 6,012,647 (Lyons et al. `647); 6,045,864 (Lyons et al. `864); 4,722,515 (Ham); 4,842,893 (Yializis et al. `893); 4,954,371 (Yializis `371); 5,097,800 (Shaw et al. `800) and 5,395,644 (Affinito). Apparatuses and portions of apparatuses that may be suitable for carrying out these and other aspects of the method illustrated in **FIG. 3** are described in more detail in the cited documents.

[0049] Exemplary monomers and oligomers suitable for use in the process shown in **FIG. 3** include acrylates, methacrylates, acrylamides, methacrylamides, vinyl ethers, maleates, cinnamates, styrenes, olefins, vinyls, epoxides, silanes, melamines, hydroxy functional monomers and amino functional monomers. Suitable monomers and oligomers can have more than one reactive group, and these reactive groups may be of different chemistries on the same molecule. Pre-polymers can be mixed to achieve a broad range of optical properties such as a desired index of refraction in one or more layers of the reflective coating. It can also be useful to coat reactive materials from the vapor phase onto a substrate already having chemically reactive species on its surface, examples of such reactive species including monomers, oligomers, initiators, catalysts, water, or reactive groups such as hydroxy, carboxylic acid, isocyanate, acrylate, methacrylate, vinyl, epoxy, silyl, styryl, amino, melamines and aldehydes. These reactions can be initiated

thermally or by radiation curing, with initiators and catalysts as appropriate to the chemistry or, in some cases, without initiators or catalysts. When more than one pre-polymer starting material is used, the constituents may be vaporized and deposited together, or they can be vaporized from separate evaporation sources.

[0050] The deposited pre-polymer materials can be applied in a substantially uniform, substantially continuous fashion, or they can be applied in a discontinuous manner, for example, as islands that cover only a selected portion or portions of the optical elements. Discontinuous applications can be provided in the form of characters, numerals, or other indicia by using, for example, a mask or other suitable techniques, including subsequent removal of undesired portions.

[0051] Pre-polymer vapor deposition is particularly useful for forming thin films having a thickness of about 0.01 μm to about 50 μm. Thicker layers can be formed by increasing the exposure time of the substrate to the vapor, by increasing the flow rate of the fluid composition to the atomizer, or by exposing the substrate to the coating material over multiple passes. Increasing the exposure time of the retroreflective article to the vapor can be achieved by adding multiple vapor sources to the system or by decreasing the speed at which the article travels through the system. Layered coatings of different materials can be formed by sequential coating depositions using a different coating material with each deposition, or by simultaneously depositing materials from different sources displaced from each other along the substrate travel path.

[0052] A variety of techniques may be used to produce a spacer layer that includes a non-uniform thickness for each of several microspheres of the color shifting articles described herein. One such exemplary technique is to condense different amounts of monomer in different thicknesses directly. Such techniques are described, e.g., in Shaw et al. `895. Alternatively, a uniform thickness of monomer may be deposited in all areas and then the spacer layer thickness may be shrunk to different extents in different areas for each microsphere. By controlling the degree of polymerization of the spacer layer, the thickness of the spacer layer may be controlled. Such techniques are also further described, e.g., in Shaw et al. `895.

[0053] Table I lists a few examples of polymer and pre-polymer materials that can be disposed to form the spacer layer using various methods. The known refractive index of

the monomer or the polymer made from the monomer is given for each material. Different refractive indices can be achieved by choosing these or other starting materials that either have a desired refractive index or that can be mixed with one or more other materials to obtain a desired refractive index. Other polymers that may be suitable are disclosed, for example, in Fleming et al. `564.

TABLE I

Polymer or pre-polymer material	Supplier of monomer	Refractive index (monomer)	Refractive index (polymer)
Poly(vinyl naphthalene)	Aldrich (Milwaukee, WI)	--	1.6818
Poly(styrene)	Aldrich	1.547	1.592
Poly(lauryl methacrylate)	Aldrich	1.445	1.474
Poly(trimethyl cylclohexyl methacrylate)	Aldrich	1.456	1.485
Poly(pentafluoro-styrene)	Aldrich	1.406	--
Poly(trifluoroethyl methacrylate)	Aldrich	1.361	1.437
Poly(dibromopropene)	Aldrich	1.5573	--
Poly(benzyl methacrylate)	Aldrich	1.512	1.568
Poly(ethylene glycol phenyl ether acrylate)	Aldrich	1.518	--
Poly(pentadecafluoro-octyl acrylate)	3M (St. Paul, MN)	1.328	1.339
Poly(ortho-sec-butyl dibromophenyl acrylate)	3M	1.562	1.594
Ethoxylated trimethylol-propane triacrylate	Sartomer (Exton, PA)	1.4695	--
Tris(2-hydroxy ethyl) isocyanurate triacrylate	Sartomer	1.4489	--
Ethoxylated Bisphenol A diacrylate	Sartomer	1.4933	--
1,6 hexanediol diacrylate	Sartomer	1.456	--
Isooctyl acrylate	Sartomer	1.4346	--
Isobornyl acrylate	Sartomer	1.4738	--
Tripropylene glycol diacrylate	Sartomer	1.44	

[0054] The disclosed color shifting retroreflective articles may be used in a variety of applications. For example, the articles can provide decorative effects for use in vehicular identification badges, advertising or signage. The articles can be affixed to substrates such

as passports, driver licenses or identification cards to provide evidence of tampering or security authentication. The articles can provide positional information based on the color of retroreflected light. The articles can have other uses that will be apparent to those skilled in the art whenever a visually perceptible change in the color of retroreflected light is desired for informational or other purposes.

[0055] The invention will now be described with reference to the following non-limiting example, in which all parts and percentages are by weight unless otherwise indicated.

Example

[0056] High index of refraction glass beads having an index of refraction of 1.93 and a 60 μm nominal diameter were partially embedded into a polyethylene layer on a polyester film carrier forming a beadcoat carrier having a layer of microspheres. A reflective coating was formed on the layer of microspheres in three separate coating passes. Between each coating pass the chamber was opened to the atmosphere. The beadcoat carrier was loaded into a vacuum chamber and the pressure was reduced to 2.7×10^{-5} torr. The beadcoat was first plasma treated with nitrogen plasma at 100 watts power, then a 4 nm (target thickness) chrome layer was sputter coated using 12,250 watts power with an argon gas to form a semitransparent first reflective metal layer. The target line speed was about 15 meters/minute (50 feet/minute), and the actual speed was about 12 meters/minute (40 feet/minute) due to apparent slippage. The vacuum chamber was opened to permit inspection of the beadcoat carrier with chrome first reflective metal layer. The carrier was then reloaded into the vacuum chamber and the pressure reduced to 3.5×10^{-6} torr. A 600 nm acrylate spacer layer was deposited at a web speed of 50 feet/minute. The acrylate spacer layer was formed from a mixture containing 48.5% IRR-214 cyclic diacrylate from UCB Chemicals, 48.5% lauryl acrylate, and 3% EBECRYL™ 170 acrylated acidic compound from UCB Chemicals. In a third pass, 30 nm of aluminum was vapor deposited from resistively heated evaporative boats to form the second reflective metal layer.

[0057] A polyurethane adhesive binder layer was applied to the color shifting retroreflective article positioned on the beadcoat carrier. The adhesive binder layer was made by mixing 10.6 grams CAPA™ 720 (now CAPA 7201A) block copolymer of epsilon-caprolactone and poly (1,4-butyleneglycol) from Solvay Chemicals; 18.0 grams

SYN FAC™ 8009 alkoxylate from Milliken Corporation; 3.4 grams PERSTORP™ TP30 acrylic polyol from Perstorp Inc.; 3 drops dibutyltin dilaurate; 60.4 grams of a polyurethane prepolymer made by reacting MONDUR™ ML diphenylmethane diisocyanate from Bayer Corp. with CAPA 720 block copolymer in a 4:1 mole ratio; and 4.6 grams of a silane adhesion promoter. The silane adhesion promoter was made from a mixture of 2.44 grams of a diethoxy silane synthesized by reacting 3.05 parts A074 aminopropylmethyl diethoxy silane from Witco Corp. and 1.625 parts propylene carbonate, and 2.46 grams of a triethoxy silane synthesized by reacting 3.63 parts A1100 aminopropyl triethoxy silane from Witco Corp. and 1.675 parts propylene carbonate. The resulting reactive polyurethane mixture was coated with a notch bar coater set at a 0.15 mm (6 mil) gap and cured 3 minutes at 66 °C, then a 100% polyester fabric substrate was applied on the semi-cured adhesive and cured at 10 minutes at 104 °C. After 4 weeks, the polyester film substrate was stripped away to yield the exposed lens color shifting retroreflective article. The material had a grayish blue-green appearance under ambient light conditions. In retroreflection, the material appeared blue or green and shifted to green or blue as the orientation of the sample shifted. The coefficient of retroreflection (Ra) was 214 at a 0.2° observation angle and –4° entrance angle. After 25 home laundering cycles this sample retained more than 50% of its original Ra.

[0058] **FIG. 4** is a chromaticity diagram using CIE x-y chromaticity coordinates for the color shifting retroreflective article of the Example. An area of about 21 cm by 24 cm of the color shifting retroreflective article was examined using the CIE 2° observer and illuminant A. The observation angle was fixed at 0.33°, which is the usual value for night time color measurements, and the entrance angle was changed in 2° steps from 0 to 60°. The resultant CIE color coordinates for night time color vary in a smooth, continuous spiral-like curve from yellow-green, green, blue, violet, purple, pink, orange, and finally white. These values are actually averages of several colors shifting because of the variation over the area of the sample that was examined at one time.

[0059] **FIG. 5** is a photograph of a portion of the color shifting retroreflective article of the Example taken using scanning electron microscopy. A cross-section of the coated glass microspheres was examined with a scanning electron microscope. **FIG. 5** shows the reflective coating formed on the layer of microspheres. The coating is very thin, contours

the structure of the surface of the beads, and approximates the target thickness. As can be seen in **FIG. 5**, the reflective coating includes a non-uniform thickness associated with each microsphere.

[0060] All references cited herein are expressly incorporated herein by reference in their entirety into this disclosure. Illustrative embodiments of this disclosure are discussed and reference has been made to possible variations within the scope of this disclosure. These and other variations and modifications in the disclosure will be apparent to those skilled in the art without departing from the scope of the disclosure, and it should be understood that this disclosure is not limited to the illustrative embodiments set forth herein. Accordingly, the invention is not to be limited only by the claims provided below.

We claim:

1. A color shifting retroreflective article, comprising:

a layer of microspheres; and

a reflective coating disposed in optical association with the layer of microspheres, wherein the reflective coating comprises an at least partially transparent spacer layer disposed between a semitransparent first reflective layer and a second reflective layer, and at least one layer of the reflective coating comprises a non-uniform thickness associated with each of a plurality of microspheres such that light incident on the article from a first direction is retroreflected at a first color and light incident on the article from a second direction is retroreflected at a second color visibly different from the first color.

2. The article of claim 1, wherein the reflective coating consists essentially of the first reflective layer, the spacer layer, and the second reflective layer.

3. The article of claim 1, wherein the non-uniform thickness associated with each of the plurality of microspheres exhibits a thickness gradient.

4. The article of claim 1, wherein the spacer layer comprises the non-uniform thickness.

5. The article of claim 1, wherein the first color and second color are characterized by CIE chromaticity coordinates (x_1,y_1), (x_2,y_2), respectively, wherein the first direction and the second direction differ by 30°, and further wherein the greater of $|x_2 - x_1|$ and $|y_2 - y_1|$ is at least 0.05.

6. The article of claim 5, wherein the greater of $|x_2 - x_1|$ and $|y_2 - y_1|$ is at least 0.1.

7. The article of claim 5, wherein the first direction is substantially normal to the layer of microspheres.

8. The article of claim 1, wherein the article exhibits an angular-dependent shift in both the color and intensity of retroreflected light.

9. A color shifting retroreflective article, comprising:

a layer of microspheres; and

a reflective coating disposed in optical association with the layer of microspheres, wherein the reflective coating comprises:

a semitransparent first reflective layer adjacent the layer of microspheres;

an at least partially transparent spacer layer adjacent the first reflective layer; and

a second reflective layer adjacent the spacer layer such that the spacer layer is between the first and second reflective layers;

wherein the reflective coating reflects visible light non-uniformly, and a predetermined first area of the reflective coating associated with each microsphere of at least a plurality of microspheres comprises a first thickness and a predetermined second area of the reflective coating associated with each microsphere of at least a plurality of microspheres comprises a second thickness different from the first thickness.

10. The article of claim 9, wherein the article retroreflects colored light when illuminated at normal incidence with white light.

11. The article of claim 9, wherein the article exhibits an angular-dependent shift in both the color and intensity of retroreflected light.

12. A method for making a color shifting retroreflective article, comprising:

providing a layer of microspheres; and

forming a reflective coating in optical association with the layer of microspheres, wherein forming the reflective coating comprises:

depositing a semitransparent first reflective layer adjacent the layer of microspheres;

depositing an at least partly transparent spacer layer on the first reflective layer; and

depositing a second reflective layer on the spacer layer;

wherein the reflective coating is formed to provide for each of a plurality of microspheres a non-uniform thickness in at least one of the respective layers of the reflective coating such that light incident on the article from a first direction is retroreflected at a first color

and light incident on the article from a second direction is retroreflected at a second color visibly different from the first color.

13. The method of claim 12, wherein depositing the spacer layer comprises:
condensing a pre-polymer vapor on the first reflective layer; and
curing the condensed pre-polymer vapor.

14. The method of claim 13, wherein depositing the spacer layer further comprises vaporizing a liquid composition containing a monomer or an oligomer to form the pre-polymer vapor.

15. The method of claim 14, wherein vaporizing the liquid composition comprises flash evaporating the liquid composition to form the pre-polymer vapor.

16. The method of claim 14, wherein vaporizing the liquid composition comprises atomizing the liquid composition into droplets and vaporizing the droplets.

17. The method of claim 13, wherein curing the condensed pre-polymer vapor comprises exposing the condensed pre-polymer vapor to radiation.

18. The method of claim 13, wherein curing the pre-polymer vapor occurs simultaneously with condensing the pre-polymer vapor.

19. The method of claim 13, wherein the pre-polymer vapor includes one or more of acrylates, methacrylates, acrylamides, methacrylamides, vinyl ethers, maleates, cinnamates, styrenes, olefins, vinyls, epoxides, silanes, melamines, hydroxyl functional monomers or amino functional monomers.

20. The method of claim 12, wherein the method further comprises forming a binder layer on the reflective coating opposite the layer of microspheres.

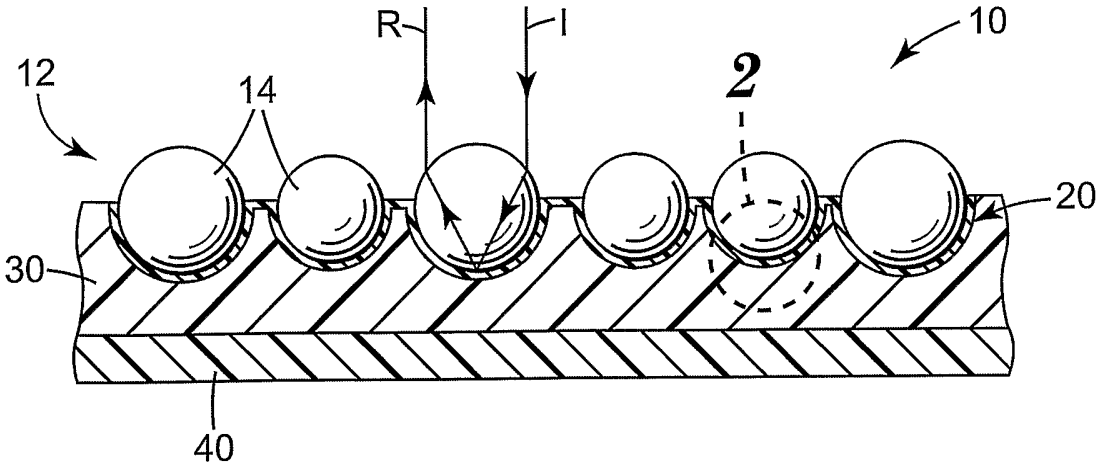

FIG. 1

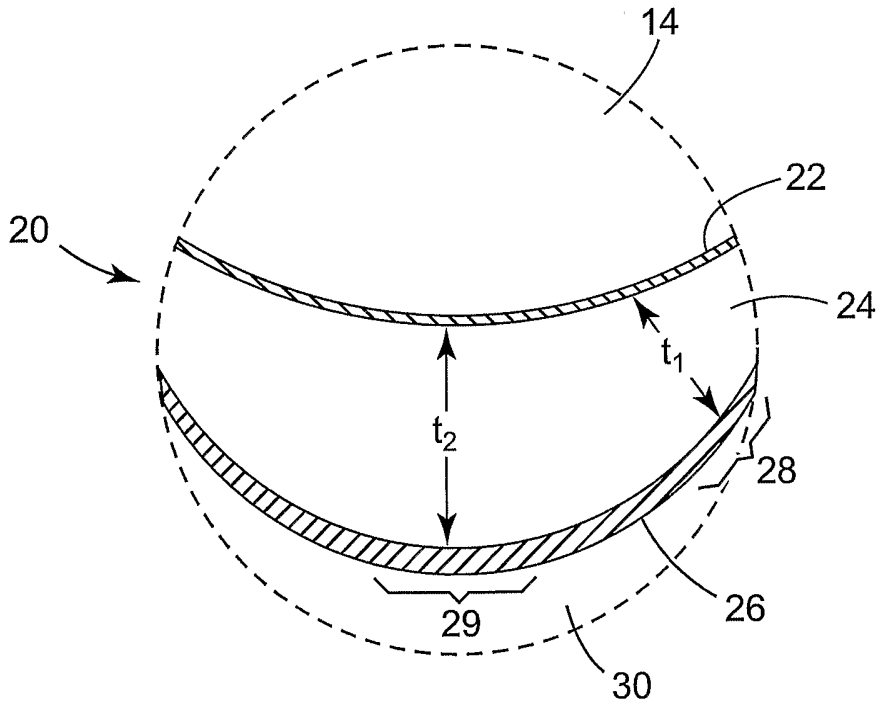

FIG. 2

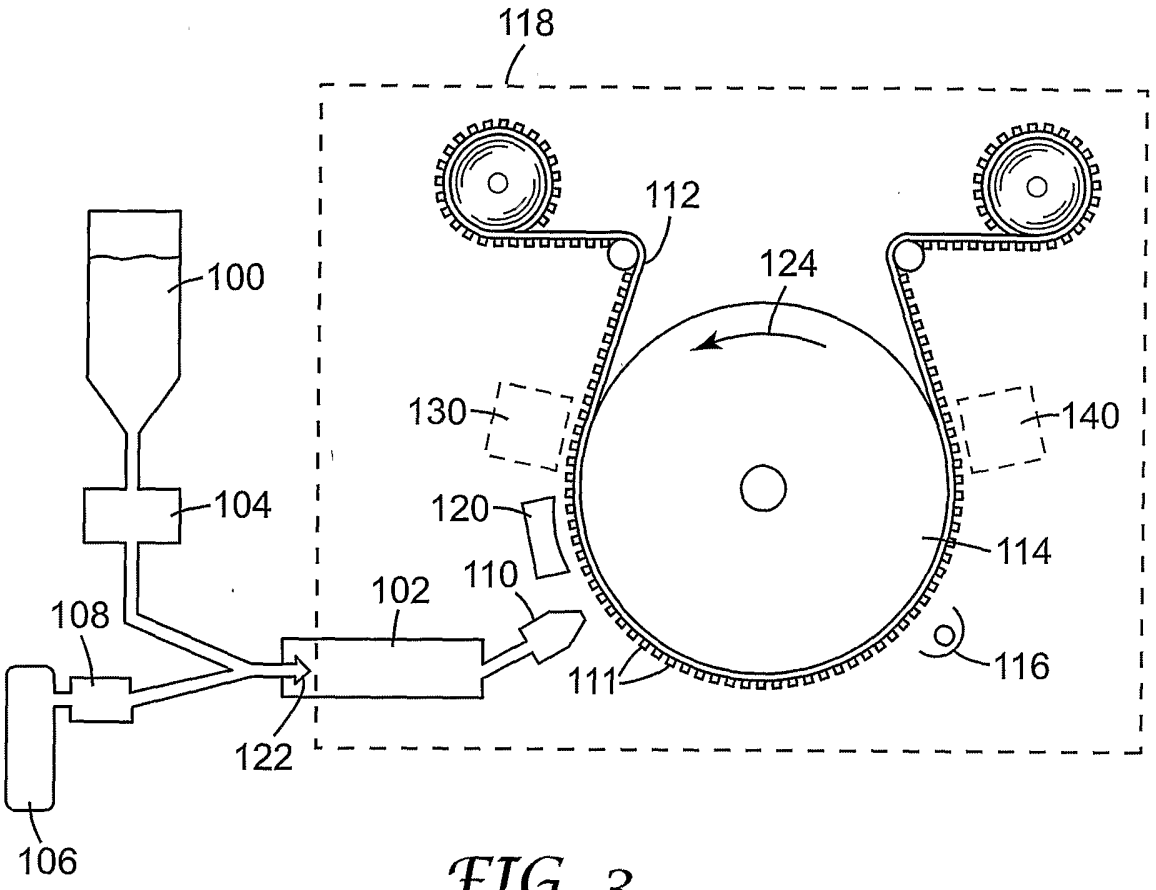

FIG. 3

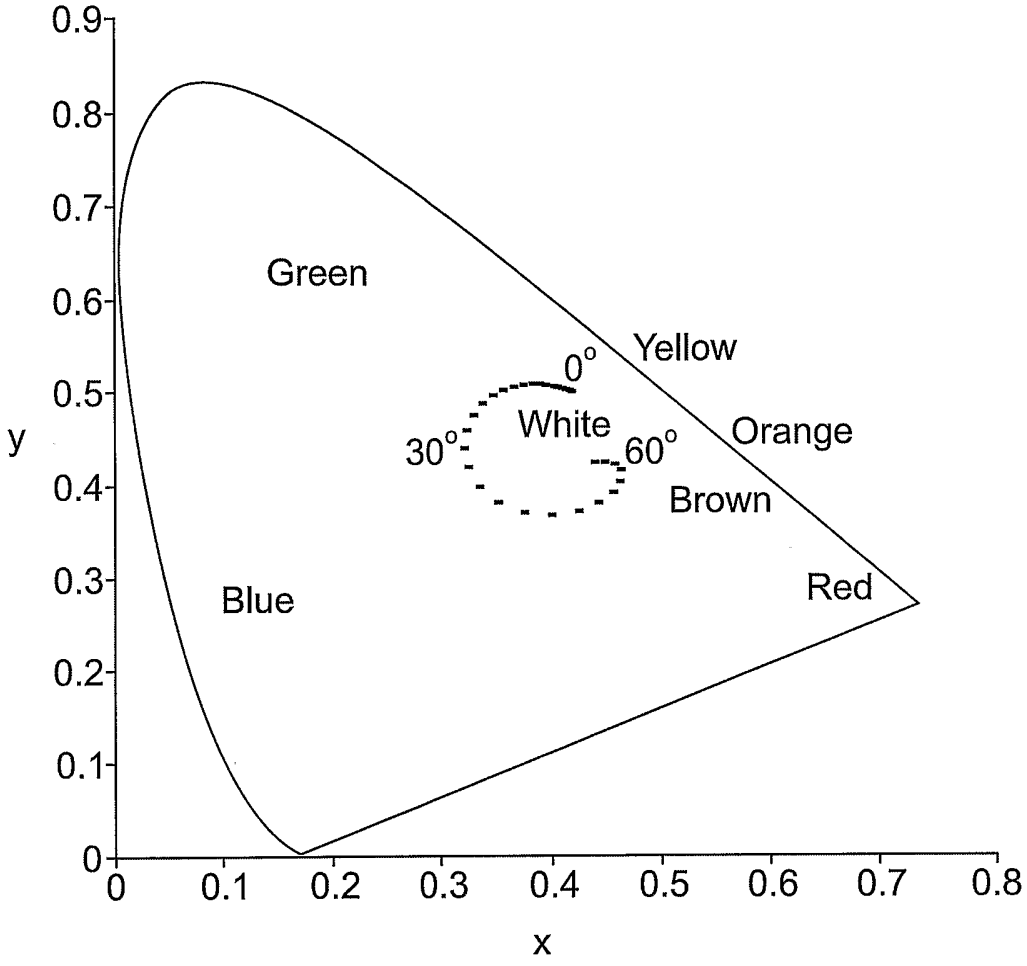
0.9
0.8
0.7
0.6
0.5
0.4
0.3
0.2
0.1
0
y
0
0.1
0.2
0.3
0.4
0.5
0.6
0.7
0.8
x
Green
Yellow
0°
White
30°
60°
Orange
Brown
Red
Blue

FIG. 4

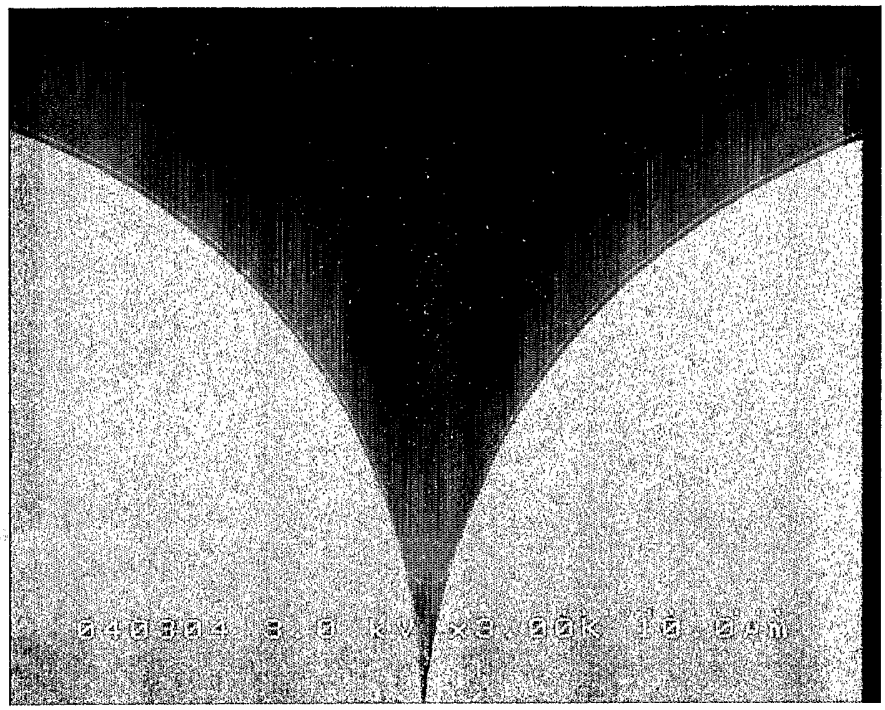

FIG. 5

INTERNATIONAL SEARCH REPORT

Int nal Application No
PCT/US2004/043549

A. CLASSIFICATION OF SUBJECT MATTER
IPC 7 G02B5/128

According to International Patent Classification (IPC) or to both national classification and IPC

B. FIELDS SEARCHED

Minimum documentation searched (classification system followed by classification symbols)
IPC 7 G02B

Documentation searched other than minimum documentation to the extent that such documents are included in the fields searched

Electronic data base consulted during the international search (name of data base and, where practical, search terms used)

EPO-Internal, PAJ

C. DOCUMENTS CONSIDERED TO BE RELEVANT

Category °	Citation of document, with indication, where appropriate, of the relevant passages	Relevant to claim No.
A	WO 97/01776 A (MINNESOTA MINING AND MANUFACTURING COMPANY) 16 January 1997 (1997-01-16) page 21, line 4 - page 25, line 3	1-20
A	US 4 099 838 A (COOK ET AL) 11 July 1978 (1978-07-11) column 4, line 13 - column 5, line 8; figures 2,3	1-20
A	WO 01/29587 A (3M INNOVATIVE PROPERTIES COMPANY) 26 April 2001 (2001-04-26) page 6, line 6 - line 20; figure 1	1,7

-/--

[X] Further documents are listed in the continuation of box C.

[X] Patent family members are listed in annex.

° Special categories of cited documents :

"A" document defining the general state of the art which is not considered to be of particular relevance

"E" earlier document but published on or after the international filing date

"L" document which may throw doubts on priority claim(s) or which is cited to establish the publication date of another citation or other special reason (as specified)

"O" document referring to an oral disclosure, use, exhibition or other means

"P" document published prior to the international filing date but later than the priority date claimed

"T" later document published after the international filing date or priority date and not in conflict with the application but cited to understand the principle or theory underlying the invention

"X" document of particular relevance; the claimed invention cannot be considered novel or cannot be considered to involve an inventive step when the document is taken alone

"Y" document of particular relevance; the claimed invention cannot be considered to involve an inventive step when the document is combined with one or more other such documents, such combination being obvious to a person skilled in the art.

"&" document member of the same patent family

Date of the actual completion of the international search	Date of mailing of the international search report
6 April 2005	18/04/2005

Name and mailing address of the ISA	Authorized officer
European Patent Office, P.B. 5818 Patentlaan 2 NL - 2280 HV Rijswijk Tel. (+31-70) 340-2040, Tx. 31 651 epo nl, Fax: (+31-70) 340-3016	Rödig, C

INTERNATIONAL SEARCH REPORT

International Application No
PCT/US2004/043549

C.(Continuation) DOCUMENTS CONSIDERED TO BE RELEVANT

Category °	Citation of document, with indication, where appropriate, of the relevant passages	Relevant to claim No.
A	PATENT ABSTRACTS OF JAPAN vol. 2002, no. 03, 3 April 2002 (2002-04-03) & JP 2001 318214 A (UNITIKA SPARKLIGHT KK), 16 November 2001 (2001-11-16) abstract	1,9
A	US 4 082 426 A (BROWN ET AL) 4 April 1978 (1978-04-04) column 2, line 39 - column 3, line 30; figures 1,2	1,9

INTERNATIONAL SEARCH REPORT

Int ial Application No
PCT/US2004/043549

Patent document cited in search report	Publication date	Patent family member(s)	Publication date
WO 9701776 A	16-01-1997	AU 6338096 A	30-01-1997
		WO 9701776 A1	16-01-1997
US 4099838 A	11-07-1978	NONE	
WO 0129587 A	26-04-2001	AU 4169000 A	30-04-2001
		CA 2388295 A1	26-04-2001
		CN 1379862 A ,C	13-11-2002
		DE 60003833 D1	14-08-2003
		DE 60003833 T2	27-05-2004
		EP 1221061 A1	10-07-2002
		ES 2197089 T3	01-01-2004
		JP 2003512643 T	02-04-2003
		WO 0129587 A1	26-04-2001
JP 2001318214 A	16-11-2001	NONE	
US 4082426 A	04-04-1978	AU 499946 B1	03-05-1979
		CA 1070282 A1	22-01-1980
		DE 2753253 A1	01-06-1978
		DK 519777 A ,B,	27-05-1978
		FR 2372447 A1	23-06-1978
		GB 1584208 A	11-02-1981
		IT 1091000 B	26-06-1985
		JP 1103826 C	16-07-1982
		JP 53068596 A	19-06-1978
		JP 56046123 B	31-10-1981
		NL 7712896 A ,C	30-05-1978
		SE 422248 B	22-02-1982
		SE 7713220 A	27-05-1978
		ZA 7707026 A	27-09-1978