Aug. 6, 1968 C. A. LEE ETAL 3,395,658

SEWING METHOD AND APPARATUS FOR MAKING SEWN FABRIC

Filed April 29, 1966 2 Sheets-Sheet 1

Fig 1

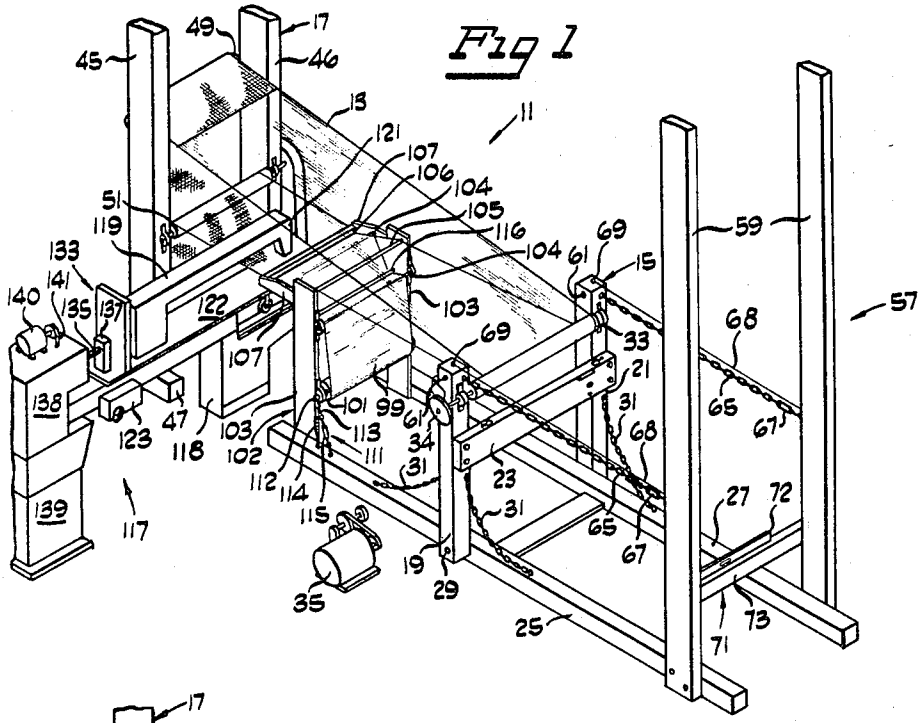

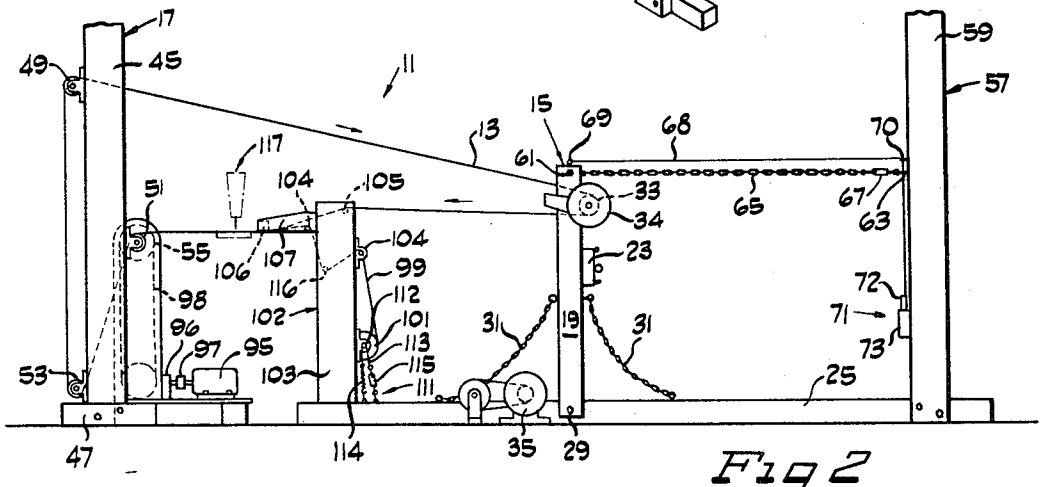

Fig 2

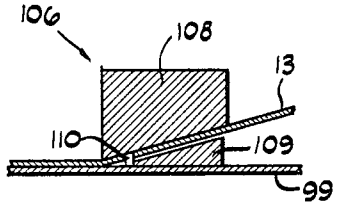

Fig 3

INVENTORS
CHARLES A. LEE
WARREN R. FURBECK

BY Anderson, Luedeka, Fitch, Even & Tabin
ATTORNEYS

Aug. 6, 1968 C. A. LEE ETAL 3,395,658

SEWING METHOD AND APPARATUS FOR MAKING SEWN FABRIC

Filed April 29, 1966 2 Sheets-Sheet 2

Fig 4

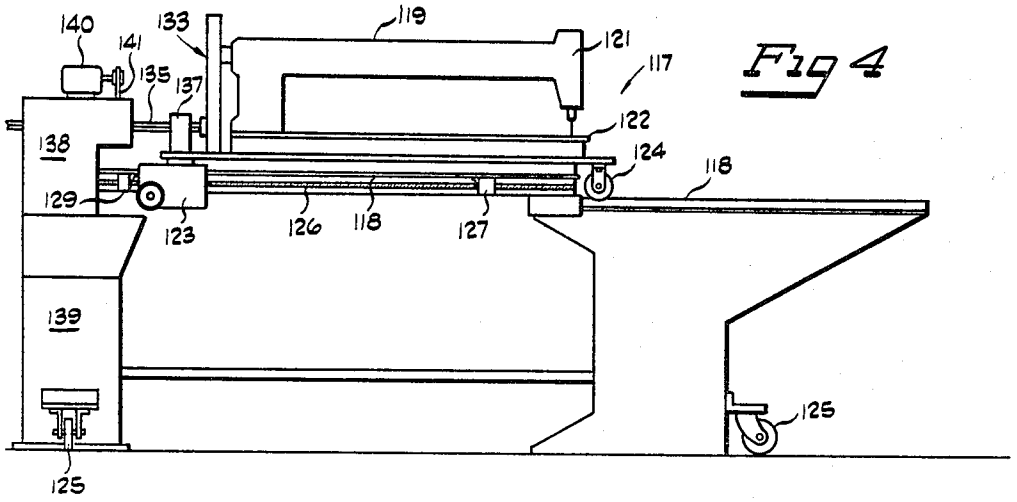

Fig 5

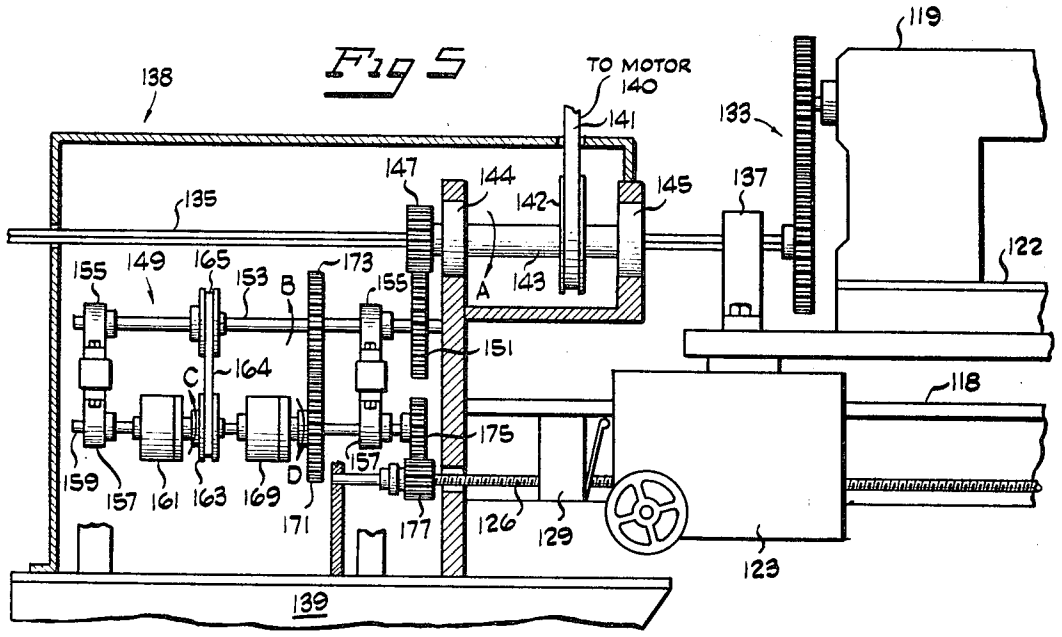

Fig 6

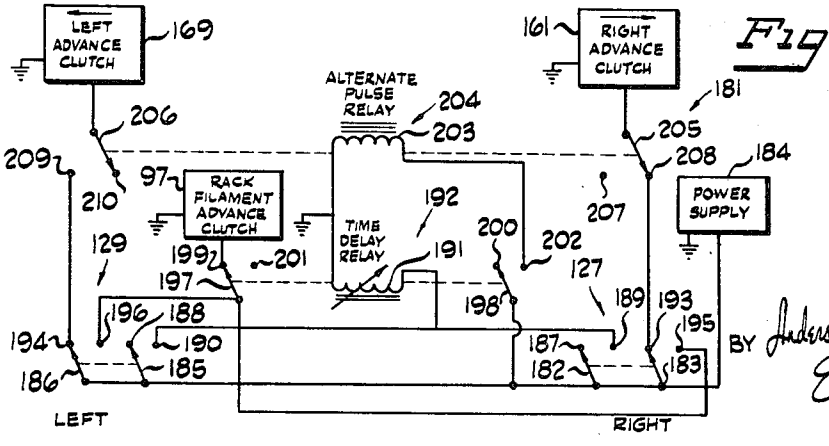

INVENTORS
CHARLES A. LEE
WARREN R. FURBECK
BY Anderson, Luedeka, Fitch Even & Tabin
ATTORNEYS

United States Patent Office 3,395,658 Patented Aug. 6, 1968

3,395,658

SEWING METHOD AND APPARATUS FOR MAKING SEWN FABRIC

Charles A. Lee and Warren R. Furbeck, Knoxville, Tenn., assignors, by mesne assignments, to Appleton Wire Works Corporation, Appleton, Wis., a corporation of Wisconsin

Filed Apr. 29, 1966, Ser. No. 546,251
9 Claims. (Cl. 112—2)

ABSTRACT OF THE DISCLOSURE

Mesh fabric is made by sewing a number of laterally independent and parallel rack filaments together by stitching back and forth across the rack filaments. A sewing apparatus is provided in which the sewing machine is caused to traverse the rack filaments back and forth over a given path by driving the machine in one direction and sensing when the sewing reaches a first predetermined position, whereupon a signal is developed which is used to stop the transverse sewing and actuate the advance of the rack filaments by a predetermined distance. Thereupon the sewing machine reverses its path and sews back across the rack filaments to a second position. The arrival at the second position is sensed by producing a signal which stops the transverse sewing and further advances the rack filaments by a predetermined distance. Thereupon the sewing again proceeds transversely across the rack filaments in the original direction. Preferably, a filler fabric is sewn to the rack filaments at the same time.

This invention relates to a method and apparatus for forming fabrics by sewing. More particularly, it relates to a sewing method and apparatus for making fabrics in which sewn filaments are sewn in one direction across rack filaments running in another direction.

This invention is directed to a sewing method and apparatus for making fabrics such as the fabrics described in the co-pending application of Charles A. Lee, Serial No. 431,030, filed Feb. 8, 1965, for "Sewn Fabric and Method of Manufacture." Such fabrics are formed by stitching sewn filaments across a plurality of rack filaments, preferably with non-woven filler filaments therebetween. The sewing method and apparatus of the present invention is suitable for various types of operations. It is particularly suitable for the fabrication of endless fabrics as described in the co-pending application of Charles A. Lee and Warren R. Furbeck, Serial No. 546,380, filed Apr. 29, 1966, for "Method and Apparatus for Making Endless Sewn Fabric." It is also particularly suitable for the continuous fabrication of a continuous fabric as described in the co-pending application of Charles A. Lee and Warren R. Furbeck, Serial No. 546,379, filed Apr. 29, 1966, for "Method and Apparatus for the Continuous Manufacture of Sewn Mesh Fabric."

As described in the aforesaid Lee and Furbeck application for "Method and Apparatus for Making Endless Sewn Fabric," loops of rack filament are disposed in substantially parallel relation in a predetermined endless path defined by a plurality of rolls disposed in predetermined relative position to form a rack. The rack may then be squared and predetermined equalized tension placed in the loops of rack filament, as by pulling on one of the rolls. The filaments are then ready for the sewing operation, although prior to the sewing, non-woven filler filaments may be deposited upon the rack filaments so that the sewn filaments may sew the filler filaments to the rack filament.

The sewing operation is performed at a sewing station disposed along the predetermined path, around which the loops are moved endlessly. The sewing operation may be performed automatically by sewing back and forth transversely of the rack filaments and advancing loops of the rack filament a predetermined amount after each traverse. With the rack filament disposed upon the rolls, the loops may be advanced by driving one of the rolls, thus advancing the loops over the predetermined path. The fabric is thus formed as the loops are moved around the predetermined path. The sewing is continued until the first row of stitches returns to the sewing station. At this point, the sewing operation is completed.

For most applications of the sewn fabric, it is necessary that it then be stabilized. Stabilization may be effected in various ways, depending upon the materials of which the fabric is made and upon the particular use to which it is to be put. The stabilization may usually be effected by heat treatment or by adding a bonding agent or by both. This stabilization may be achieved as described in greater detail in the aforesaid Lee and Furbeck application for "Method and Apparatus for Making Endless Sewn Fabric."

Alternatively, the rack filaments may be disposed in substantially parallel relation for longitudinal movement along a continuous path defined by a plurality of rolls disposed in predetermined relative position to form a rack, as described in the aforesaid Lee and Furbeck application for "Method and Apparatus for the Continuous Manufacture of Sewn Mesh Fabric." These rack filaments may then be sewn together with the apparatus of the present invention, and the sewn fabric thus formed may then be stabilized in the manner described in the aforesaid Lee and Furbeck application for "Method and Apparatus for the Continuous Manufacture of Sewn Mesh Fabric."

It is therefore a primary object of the present invention to provide a method and apparatus for making fabric by sewing loops of rack filaments together with sewn filaments to form a mesh fabric. Another object of the invention is to provide a method and apparatus for making such a fabric in which non-woven filler filaments are sewn to the rack filaments by sewn filaments. Still another object of the invention is to provide a sewing method and apparatus for sewing back and forth transversely of rack filaments to sew the rack filaments together, advancing the rack filaments a predetermined amount after each traverse and reversing the direction of sewing upon each advance. Further objects and advantages of the present invention will become apparent from consideration of the following description taken in conjunction with the following drawings wherein:

FIGURE 1 is a perspective view of a rack for forming fabrics by sewing according to the present invention, illustrating the formation of an endless fabric by sewing transversely of the loops of rack filament;

FIGURE 2 is a side elevation of the apparatus as shown in FIGURE 1;

FIGURE 3 is an enlarged sectional view of the comb illustrated in FIGURE 2;

FIGURE 4 is an enlarged side elevation of the sewing means shown in FIGURE 1;

FIGURE 5 is an enlarged view, partly in section, of the driving mechanism for the sewing means shown in FIGURE 4; and

FIGURE 6 is a diagrammatic illustration of the electrical circuitry for controlling the operation of the driving mechanism shown in FIGURE 5.

In general, the fabrication of sewn fabric involves three successive operations:

(1) The disposition of rack filaments upon a rack;
(2) The sewing together of the rack filaments; and
(3) The finishing or stabilizing of the sewn fabric thus

produced. It is the second operation to which the present invention is directed.

In FIGURE 1 there is illustrated a rack **11** upon which rack filaments **13** are disposed. As shown, the rack **11** includes two spaced frames **15** and **17** having means for mounting elongated support members in the form of rolls thereon. The frame **15** comprises a pair of spaced parallel uprights **19** and **21**. The uprights **19** and **21** may be constructed of wood or other suitable material. To maintain a spaced relation between the uprights a cross support member **23** is secured thereto. The lower ends of the uprights **19** and **21** are each secured to a respective fixed longitudinal member **25**, **27** by a single bolt **29** which passes through the end of the upright and through the fixed member, thereby permitting limited rotary movement of the uprights about the fixed members. The fixed members **25** and **27** may be secured to the floor. To prevent the frame **15** from falling over as the apparatus is being placed in operation, support chains **31** are provided which are secured between the uprights **19** and **21** and the fixed members **25** and **27** as shown in FIGURE 1.

Journaled in the upright members and positioned slightly below the upper ends thereof is a stretch roll **33** which may be coupled by means of a pulley **34** and suitable belts to a motor **35** for the winding on operation.

The rear frame **17** includes spaced uprights **45** and **46** the lower ends of which are secured to fixed members **47** which in turn may be secured to the floor. The uprights **45** and **46** should be secured against motion as by bracing them or affixing their upper ends to the ceiling. Rotatably mounted upon the uprights **45** and **46** are three rolls, an upper roll **49**, an intermediate roll **51** and a lower roll **53**. As illustrated in FIGURE 1 the axle of the intermediate roll **51** has affixed thereto a pulley **55** for rotatably driving the roll **51** in a manner to be hereinafter more clearly described.

The support rolls **33**, **49**, **51** and **53** generally define an endles path over which the loops of rack filament **13** are disposed in performing the first operation of disposing loops of rack filament **13** on the rack **11** and over which the rack filaments **13** are moved in the subsequent sewing and stabilizing operations. The stretch roll **33** is mounted for movement about the bolts **29** in order to adjust the length of the path and maintain proper tension in the rack filament **13** after it has been disposed on the rack **11**. To provide a means for adjusting the position of the stretch roll **33** and the tension within the filament **13**, a tensioning means **57** is provided. In the illustrated embodiment, the tensioning means **57** comprises a pair of upright support members **59**, the lowermost ends of which are rigidly secured to the fixed members **25** and **27**. The support members **59** should be secured against movement as by appropriate bracing or by securing their upper ends to a ceiling. The frame **15** is provided with two bolts **61** positioned opposite hooks **63** provided upon the uprights **59**. Secured between the bolts **61** and hooks **63** are chains **65** each having a turnbuckle **67** serving as a means for adjusting the distance between the fixed uprights **59** and respective movable uprights **19** and **21** and for placing proper tension in the rack filament **13**.

It is generally desirable that the finished fabric be of uniform length across its entire width. To this end, it is preferable that the lengths of the respective filaments all be substantially the same. The uprights **19** and **21** are therefore adjusted to provide equal path lengths at both ends of the roll **33**. This adjustment may be by any suitable method as by trial and error or accurate measurement. This adjustment may be effected by use of the turnbuckles **67**. At the same time, it is contemplated that the tension in the loops of filament **13** or in the sewn fabric may be adjusted from time to time during the fabrication process. Since this adjustment of tension is also effected by use of the turnbuckles **67**, and since the turnbuckles **67** are independently adjusted, means is provided for assuring that the rack remains square during such adjustment of the turnbuckles **67**.

As illustrated, a simple means for keeping the rack square comprises a pair of cords **68** each attached at one end to a respective one of uprights **19**, **21** as by an eye **69**. The other ends of the cords **68** are passed over guides **70** to an indicating means **71**, which may comprise a carpenter's level **72** disposed on a support **73** in turn supported at each end by a respective one of cords **68**. With the rack initially square, the cords **68** are tied at such lengths that the level **72** is horizontal. Then any relative difference in the distances between the uppermost ends of the uprights **19** and **21** and the respective support members **59** will be readily detected by the indicating means **71**. If the respective turnbuckles **67** are adjusted while keeping the level **72** horizontal, the rack **11** is kept square.

The first operation, that of disposing loops of rack filament **13** in predetermined laterally spaced relation upon the rack **11**, may be performed as described in the aforesaid Lee and Furbeck application for "Method and Apparatus for Making Endless Sewn Fabric." The filament **13** may be made of any of a number of materials used in textiles. For example, it may be made of synthetic fibers such as polyester fibers sold under the trademark Dacron. However, many other materials, such as other synthetic fibers, natural fibers, metal and even paper, can be used, depending upon the use to which the finished fabric is to be put. The number of loops and the size of the filament **13** depends upon the material of which the filament **13** is made as well as upon the desired properties of the finished fabric. The rack filament **13** provides strength to the finished fabric and must therefore be large enough for the purpose; at the same time it must not diminish other desirable properties of the fabric, such as its permeability. For making one type of filter fabric, it has been found suitable to use a Dacron filament of 220 denier with 16 loops per inch.

Irrespective of how the rack filaments **13** are laid in place on the rack **11**, they are preferably disposed in predetermined substantially parallel relationship along the endless path defined by the rolls **33**, **49**, **51**, **53**. Tension may be maintained in the filaments by the tensioning means **57**. The filaments **13** may then be advanced along the predetermined path past a sewing station, where they are sewed together to form a sewn mesh fabric. The rack filaments may be advanced by driving the roll **51**. As shown, a drive motor **95** is coupled through a magnetic clutch **97** to a gear box **96** which in turn is connected by a drive chain **98** to the roll **51**.

Although it is within the scope of the invention to fabricate a sewn mesh fabric without additional filler material, it is generally desired to make the fabric to include such filler. The filler acts to provide certain qualities to the finished fabric as may be desired for particular uses. The filler may be made of various materials and in various forms. A filler suitable as filler for filter fabrics has been found to be filler formed of randomly disposed synthetic fibers such as polyester fibers sold under the trademark Dacron. Such fibers are sold in non-woven sheet form in which the fibers are bonded together. One useful form is sold under the trademark Reemay Spunbonded and comes in various thicknesses, thereby permitting selection of properties for the fabric, such as its porosity or permeability. A size found useful for making filter fabric is sold as Style 240.

Filler material **99** is preferably supplied from a roll **101** which is rotatably mounted upon a frame **102** comprising uprights **103** which are secured to the fixed members **25** and **27**. The filler sheet **99** is directed over a pair of guide bars **104** also secured upon the frame **102**. These guide the sheet **99** to the sewing station where it is to be sewn to the rack filaments **13**.

The rack filaments **13** are themselves guided to the sewing station by a guide bar **105** and a comb **106**. The bar **105** and the comb **106** are removably mounted upon the

frame 102 and are secured in place at the positions indicated after the loops of rack filament 13 have been disposed upon the rack 11 in the manner described above. The comb 106 is supported on the frame 102 by a pair of arms 107. As shown best in FIGURE 3, the comb 106 comprises an upper comb bar 108 and a lower comb bar 109, between which extend comb teeth 110. The rack filament 13 extends between the upper comb bar 108 and the lower comb bar 109 with individual loops of rack filament 13 being captured between respective successive comb teeth 110. The filler 99 rides on the underside of the lower comb bar 109. The loops of rack filament 13 and the filler 99 are thus directed to the sewing station in the desired relationship.

It is desired that the filler 99 be delivered smooth and unwrinkled. To this end a retarding force is applied to the filler 99 as it leaves the roll 101. Thus, when the filler is pulled away in the course of fabrication of the fabric, the filler sheet 99 is stretched flat. The retarding force may be derived from a brake 111 which applies retarding torque to the axle 112 of the roll 101. The brake 111 may, as shown, comprise a brake band 113, urged against the axle 112 by a spring 114. The tension on the spring and hence the braking force is adjusted by a turnbuckle 115. A relatively heavy rod 116 may be floated on the filler sheet 99 to aid in keeping it smooth and unwrinkled.

To start the sewing operation, the end of the filler sheet 99 may be hand carried to the sewing station at which is disposed a sewing means 117. The sewing means 117 is then operated to sew the filler 99 to the loops of rack filament 13. The operation may then proceed automatically.

As illustrated in greatest detail in FIGURE 4, the sewing means 117 comprises a support 118 for supporting a sewing machine 119 for movement transversely across the rack filaments 13 in a reciprocating manner. The sewing machine 119 may be of standard construction, having a sewing head 121 and a sewing bed 122 with a throat therebetween sufficient to permit the sewing head 121 to traverse the rack filaments 13. The sewing machine 119 is mounted upon a slidable support member 123 and bearing rollers 124 to facilitate movement along the path defined by the support 118.

The sewing means 117 may be permanently mounted at the sewing station, or it may, as shown, be mounted on rollers 125 and rolled into operating position after the filament 13 has been wound on the rack 11, and then locked in position. The sewing machine 119 is caused to move back and forth across the support 118 by the action of a screw 126 which is driven in a manner described in greater detail below in connection with FIGURES 5 and 6. The screw 126 is driven first one way and then the other. It engages the slidable member 123 to drive the sewing machine 119 mounted thereon.

The position of the sewing machine 119 as it reaches the longitudinal edges of the rack filaments 13 is sensed by a pair of limit switches 127, 129. Both limit switches may be double pole, double throw microswitches mounted upon the support 118. The microswitches 127 and 129 may, as shown, be actuated by the support 123 which is driven back and forth with the sewing machine 119 as shown in FIGURE 4. Limit switch 127 senses when the sewing machine 119 has reached the right limit, and limit switch 129 senses when the sewing machine 119 has reached the left limit of its desired travel.

The sewing machine 119 is driven through a gear train 133 by a drive shaft 135 journaled in a bearing 137. A driving mechanism 138 is mounted on a pedestal 139, which pedestal supports the support 118. The driving mechanism is shown in greater detail in FIGURE 5. The motive power is developed by an electric motor 140 which is coupled by a belt 141 to a pulley 142 mounted on a shaft 143. The shaft 143 is coupled to the drive shaft 135. Preferably the drive shaft 135 is made square, and the shaft 143 is made with a mating square opening therethrough. This provides positive action for rotating the drive shaft 135 while permitting it to slide longitudinally as the sewing machine 119 is reciprocated. The shaft 143 is journaled in bearings 144 and 145. A pinion gear 147 is rigidly mounted on the shaft 143 for driving machine traversing mechanism 149.

The pinion gear 147 is meshed with a spur gear 151 for driving a shaft 153 rotatably mounted in bearings 155. Positioned below the shaft 153 and rotatably mounted in bearings 157 is a shaft 159. Mounted for selective rotation about the shaft 159 is a right advance clutch 161 coupled to a pulley 163 driven through a belt 164 by a pulley 165 mounted on the shaft 153. Also mounted for selective rotation about the shaft 159 is a left advance clutch 169 coupled to a gear 171 engaged with a gear 173 mounted upon the shaft 153. Provided upon one end of the shaft 159 is a gear 175 which is engaged with a similar gear 177 mounted upon the advance screw 126. The advance screw 126 is threaded through the support member 123 so that rotary movement of the screw 126 causes the member 123 to traverse the support 118.

The shaft 143 is driven by the motor 140 in the direction indicated by the arrow A. This of course drives the shaft 153 in the opposite direction, as indicated by the arrow B. This in turn drives the pulley 163 in the same direction, as indicated by the arrow C, while at the same time driving the gear 171 in the opposite direction, as indicated by the arrow D. The clutches 161, 169, which may be conventional electrically energized magnetically operated clutches, selectively drivingly engage either the pulley 163 or the gear 171 with the shaft 159, thus driving the shaft 159 one way or the other. With the clutch 161 engaged, the shaft 159 turns in the direction indicated by the arrow C, thus turning the screw 126 to advance the support 123 and the sewing machine 119 to the right as shown in FIGURE 5. Similarly, with the clutch 169 engaged, the shaft 159 turns in the direction indicated by the arrow D, thus turning the screw 126 to move the support 123 and the sewing machine 119 to the left. The operation of the clutches is controlled by a control system 181, which may be in the form illustrated in FIGURE 6.

Referring to FIGURE 6, the control system 181 includes the double pole, double throw microswitches 127 and 129, which are the sensing elements for the control system. The switches 127, 129 are shown in their normal condition into which they are biased when the sewing machine 119 is between the limits. Switch 127 includes a pair of movable contacts 182, 183, each connected at all times to a power supply 184. Switch 129 includes a pair of movable contacts 185, 186 also connected at all times to the power supply 184.

Contacts 182 and 185 normally engage fixed contacts 187 and 188, respectively, these contacts 187, 188 being open circuited. When switch 127 is operated, the movable contact 182 is moved into contact with a fixed contact 189. Similarly, when switch 129 is operated, the movable contact 185 is moved into contact with a fixed contact 190. The contacts 189, 190 are connected to the actuating coil 191 of a time delay relay 192 of the double pole, double throw type. Thus the relay 192 is actuated when either of the limit switches 127, 129 is operated.

Contact 183 normally engages a fixed contact 193, and contact 186 normally engages a fixed contact 194. When switch 127 is operated, the movable contact 183 is moved into contact with a fixed contact 195. Similarly, when switch 129 is operated, the movable contact 185 is moved into contact with a fixed contact 196. Contacts 195, 196 are both connected to a movable contact 197 of the relay 192. The other movable contact 198 of the relay 192 is connected to the power supply 184.

Time delay relay 192 is biased so that contact 197 normally engages a fixed contact 199 and contact 198 normally engages a fixed contact 200. Contact 199 is connected to the rack filament advance clutch 97, and

contact **200** is open circuited. When the time delay relay **192** operates, contact **197** moves to contact a fixed contact **201**, which is open circuited, and contact **198** moves to contact a fixed contact **202**, which is connected to the actuating coil **203** of an alternate pulse relay **204**, which is also of the double pole, double throw type.

The relay **204** includes two movable contacts **205** and **206**. Contact **205** is connected to the right advance clutch **161**, and contact **206** is connected to the left advance clutch **169**. The operation of the relay **204** moves the contact **205** from one to the other of fixed contacts **207** and **208**, at the same time moving the contact **206** from one to the other of fixed contacts **209** and **210**. Contacts **207** and **210** are open circuited. Contact **208** is connected to contact **193**, and contact **209** is connected to contact **194**. Operation of the relay **204** thus alternately open circuits one or the other of the advance clutches **161**, **169**. With the switches and relays in the positions shown in FIGURE 6, the sewing machine will be advanced to the right.

For purposes of describing the operation of the traversing mechanism **149** and the control system **181**, it will be assumed that the positions of the switches and relays are as shown in FIGURE 6 and that the sewing machine **119** is moving along the support **118** towards the right as viewed in FIGURE 5. As the sewing machine **119** is traversing its path along the support **118**, the filament advance clutch **97** is disengaged and the loops of rack filament **13** are stationary upon the rack **11**. The pulley **142** is driven, causing the drive shaft **135** to rotate, thereby actuating the sewing machine **119** through the gear train **133**. As shown in FIGURE 6, the right advance clutch **161** is engaged, thereby coupling the pulley **163** to the shaft **159** and advancing the sewing machine **119** to the right along the support **118**.

When the sewing machine **119** reaches its right limit of travel, the right microswitch **127** is operated, disconnecting the movable terminal **183** from the fixed terminal **193**, thereby deenergizing the right advance clutch **161**, preventing further advance of the machine **119**. At the same time, the movable contact **183** is moved to engage contact **195**, thus energizing the rack filament advance clutch **97**. Energization of the rack filament advance clutch **97** causes the rack filament **13** to advance along the path of the rack **11**. Also at the same time, the operation of the switch **127** moves the movable contact **182** into contact with the contact **189**, thereby energizing the time delay relay **192**. However, as is conventional with time delay relays, the relay **192** remains open for a predetermined interval of time.

After the predetermined interval has elapsed, the relay **192** will pull in, causing the movable terminal **197** to break with the terminal **199** and thereby deenergizing the clutch **97** and stopping the advance of the loops of rack filament **13**. The loops of filament **13** are thus advanced by a predetermined increment along the rack **11**. As the relay **192** pulls in, it moves the movable contact **198** into contact with contact **202**, thus actuating the alternate pulse relay **204**. As is conventional with alternating pulse relays, each actuation causes it to reverse states. Hence, under the condition assumed, the actuation of the relay **204** moves the contact **205** away from contact **208** and moves the contact **206** into contact with the contact **209**.

Since the microswitch **129** is in its normal condition, the engaging of contact **206** with contact **209** energizes the left advance clutch **169**, thereby coupling the gear **171** with the shaft **159** and advancing the sewing machine **119** to the left. As the sewing machine moves left, the microswitch **127** returns to its normal state. This moves contact **182** out of engagement with the contact **189**, thus deenergizing the relay **192**, which returns to its normal state. Although this brings contact **197** into engagement with contact **199**, the rack filament advance clutch **97** is not energized because the contact **183** is disengaged from contact **195** upon release of the microswitch **127**. Although this at the same time engages contacts **183** and **193**, the right advance clutch **161** is not energized because the contact **205** was earlier disengaged from contact **208**.

The control system **181** is then back in its normal condition, with all connections as shown in FIGURE 6 except for the alternate pulse relay **204**, which is in its alternate state. The sewing machine **119** continues its advance to the left until the left limit microswitch **129** is actuated, whereupon a series of operations occurs corresponding to that described above upon actuation of the right limit microswitch **127**. In this manner, the sewing machine **119** is caused to traverse the loops of rack filament **13**, sewing parallel rows of stitches back and forth across the loops, thereby sewing the filler **99** thereto.

It may be noted that, with the arrangement illustrated and described, the sewing machine **119** is continually operated during the switching and reversing operation; however, if desired the stitching may be stopped while the rack filaments **13** are advanced along the rack **11**.

The sewing operation may now be briefly described. After the rack filament **13** is disposed upon the rack **11**, the comb **106** is put in place to guide the loops of rack filament **13** to the sewing station. The guide bar **105** is inserted to guide the loops into the comb **106** at the desired angle. Proper tension is applied to the loops of rack filament **13** by adjusting the turnbuckles **67**. A desirable tension has been found to be about 1.5 pounds per loop for a Dacron filament of 220 denier. The filler **99** is then withdrawn from the roll **101** and directed over guides **104** and under the comb **106** to the sewing station. The filler **99** is disposed against the loops of rack filament **13** on the bed **122** of the sewing machine **119**.

The sewing machine **119** traverses back and forth across the loops of rack filament **13**, sewing the filler **99** thereto, the loops of rack filament **13** and the filler **99** being advanced a predetermined amount after each traverse. This makes equally spaced substantially parallel rows of stitches. It may be necessary to pull the filler **99** along separately for a few rows, but thereafter they are readily pulled along by the rack filament **13**.

The sewing machine **119** itself may have a conventional sewing head **121**. It may make any of a variety of stitches, including lock stitches and chain stitches. A single thread chain stitch has the advantage that it does not require a bobbin beneath the bed **122**; such bobbins are almost necessarily small and therefore hold so little thread that the sewing operation must be stopped to replenish the thread in the bobbin. This makes completely automatic operation difficult. Any of a number of materials may be used for the sewn filaments, including those mentioned above for the rack filament **13**. For making filter fabrics, it has been found suitable to use Dacron filaments of 220 denier for both the rack and the sewn filiments. With such rack filament **13** wound as above described at 16 loops per inch and with a filler of Reemay Spunbonded fibers, Style 240, the fabric was found to be suitable as a filter fabric when the sewn filaments were stitched in rows at 8 stitches per inch with the rows one-third inch apart.

The sewing operation may continue automatically until the sewn portion approaches the comb **106**. The comb **106** is then removed and the sewing is continued automatically until a complete endless loop of fabric is formed. For stability it is usually desirable that the filler **99** be lapped for at least one row of stitches. The filler **99** may then be cut off the roll **101**, and the sewn fabric is ready for the finishing operation. The stabilizing operation may include heat stabilization or the addition of a bonding agent or both and may be performed as described in the aforesaid Lee and Furbeck application for "Method and Apparatus for Making Endless Sewn Fabric."

Although various preferred embodiments of the present invention have been herein described, numerous modifications may be made therein within the scope of the

present invention. Thus, although the sewing apparatus has been described above in some detail in respect to the manufacture of endless sewn fabric, the invention may also be used in the continuous manufacture of sewn fabric as described in the aforesaid Lee and Furbeck application for "Method and Apparatus for the Continuous Manufacture of Sewn Mesh Fabric." The invention is limited only by the claims.

What is claimed is:

1. A method of manufacturing a mesh fabric comprising the steps of supporting a plurality of laterally independent rack filaments in spaced parallel relation upon a plurality of elongated members mounted in fixed relationship to each other, said filaments being supported for movement in a predetermined first path past a station, at said station sewing along a second path transverse to said filaments between two predetermined limits to sew said filaments together, advancing said filaments a predetermined distance along said first path when said sewing reaches one of said limits of travel, and reversing the direction of sewing upon said advance of said filaments so as to traverse said filaments reciprocally between said limits.

2. A method of manufacturing a mesh fabric comprising the steps of supporting a plurality of laterally independent rack filaments in spaced parallel relation upon a plurality of elongated members mounted in fixed relationship to each other, said rack filaments being supported for movement in a predetermined first path past first and second stations, at said first station depositing non-woven filler filaments on said rack filaments, at said second station sewing between two predetermined limits along a second path transverse to said rack filaments to sew said rack filaments to said filler filaments, advancing said rack filaments with said filler filaments thereon a predetermined distance along said first path when said sewing reaches one of said limits of travel, and reversing the direction of sewing upon said advance of said filaments so as to traverse said rack filaments reciprocally between said limits.

3. An apparatus for the manufacture of a mesh fabric comprising a rack including a plurality of elongated members mounted in fixed relationship to each other for receiving a plurality of rack filaments in spaced relation thereupon and supporting said filaments for movement in a predetermined first path past a station, first drive means for advancing said filaments along said first path past said station, sewing means positioned at said station for movement along a path transverse to said filaments for sewing said filaments together, second drive means for moving said sewing means along said transverse path from a first position to a second position, means responsive to the positioning of said sewing means at said second position for disengaging said second drive means and momentarily actuating said first drive means to advance said filaments a predetermined distance along said first path, third drive means for moving said sewing means along said transverse path from said second position to said first position, means responsive to the positioning of said sewing means at said first position for disengaging said third drive means and momentarily actuating said first drive means to advance said filaments a predetermined distance along said first path, and means for engaging one of said second and third drive means upon said advance of said filaments so as to traverse said filaments reciprocally between said first and second positions.

4. An apparatus for the manufacture of a mesh fabric comprising a rack including a plurality of elongated members mounted in fixed relationship to each other for receiving a plurality of rack filaments in spaced relation thereupon and supporting said filaments for movement in a predetermined first path past a station, first drive means for advancing said filaments along said first path past said station, sewing means positioned at said station for movement along a path transverse to said filaments for sewing said filaments together, second drive means for moving said sewing means along said transverse path from a first position to a second position, means responsive to the positioning of said sewing means at said second position for disengaging said second drive means and momentarily actuating said first drive means to advance said filaments a predetermined distance along said first path without stopping the operation of said sewing means, third drive means for moving said sewing means along said transverse path from said second position to said first position, means responsive to the positioning of said sewing means at said first position for disengaging said third drive means and momentarily actuating said first drive means to advance said filaments a predetermined distance along said first path without stopping the operation of said sewing means, and means for engaging one of said second and third drive means upon said advance of said filaments so as to traverse said filaments reciprocally between said first and second positions.

5. An apparatus for the manufacture of a mesh fabric comprising a rack including a plurality of elongated members mounted in fixed relationship to each other for receiving a plurality of rack filaments in predetermined spaced relation thereupon and supporting said filaments for movement in a predetermined first path past a station, first drive means for advancing said filaments along said first path past said station, sewing means positioned at said station for movement along a path transverse to said filaments for sewing said filaments together, motive means coupled to said sewing means for actuating the sewing operation thereof, second drive means for moving said sewing means along said transverse path between a first position and a second position, coupling means for coupling said motive means to said second drive means for moving said sewing means reciprocally between said first position and said second position at a rate proportional to the rate of the sewing operation of said sewing means, means responsive to the positioning of said sewing means at either one of said first and second positions momentarily actuating said first drive means to advance said filaments a predetermined distance along said first path.

6. An apparatus for the manufacture of a mesh fabric comprising a rack including a plurality of elongated members mounted in fixed relationship to each other for receiving a plurality of rack filaments in predetermined spaced relation thereupon and supporting said filaments for movement in a predetermined first path past a station, first drive means for advancing said filaments along said first path past said station, sewing means positioned at said station for movement along a path transverse to said filaments for sewing said filaments together, motive means coupled to said sewing means for actuating the sewing operation thereof, second drive means for moving said sewing means along said transverse path between a first position and a second position, first coupling means for coupling said motive means to said second drive means for moving said sewing means from said first position to said second position at a rate proportional to the rate of the sewing operation of said sewing means, second coupling means for coupling said motive means to said second drive means for moving said sewing means from said second position to said first position at a rate proportional to the rate of the sewing operation of said sewing means, means responsive to the positioning of said sewing means at said first position for disengaging said second coupling means and momentarily actuating said first drive means to advance said filaments a predetermined distance along said first path without stopping the sewing operation of said sewing means, means responsive to the positioning of said sewing means at said second position for disengaging said first coupling means and momentarily actuating said first drive means to advance said filaments a predetermined distance along said first path without stopping the operation of said sewing means, and means for engaging one of said first and second coupling means upon said advance of said filaments so as to traverse said fila-

ments reciprocally between said first and second positions.

7. Apparatus according to claim 6 wherein said motive means includes a first shaft rotated in one direction, said second drive means includes a second rotatable shaft, said first coupling means couples said first shaft through a first clutch to said second shaft to rotate said second shaft in a first direction, and said second coupling means couples said first shaft through a second clutch to said second shaft to rotate said second shaft in the direction opposite to said first direction.

8. A method of manufacturing a mesh fabric comprising the steps of supporting a plurality of rack filaments in spaced relation upon a plurality of elongated members mounted in fixed relationship to each other, said filaments being supported for movement in a predetermined first path past a station, at said station sewing in a first direction along a second path transverse to said filaments to sew said filaments together, sensing when said sewing reaches a first predetermined position along said second path by responding to such condition and producing a first signal indicative thereof, in response to said first signal advancing said filaments a predetermined distance along said first path, upon said advance of said filaments reversing the direction of sewing thereby sewing in a direction opposite to said first direction along said second path, sensing when said sewing reaches a second predetermined position along said second path by responding to such condition and producing a second signal indicative thereof, in response to said second signal further advancing said filaments a predetermined distance along said first path, and upon said further advance of said filaments again reversing the direction of sewing so as to traverse said filaments along said second path reciprocally between said first and second positions.

9. A method of manufacturing a mesh fabric comprising the steps of supporting a plurality of rack filaments in spaced relation upon a plurality of elongated members mounted in fixed relationship to each other, said filaments being supported for movement in a predetermined first path past first and second stations, at said first station depositing non-woven filler filaments on said rack filaments, at said second station sewing in a first direction along a second path transverse to said rack filaments to sew said rack filaments to said filler filaments, sensing when said sewing reaches a first predetermined position along said second path by responding to such condition and producing a first signal indicative thereof, in response to said first signal advancing said rack filaments with said filler filaments thereon a predetermined distance along said first path, upon said advance of said filaments reversing the direction of sewing thereby sewing in a direction opposite to said first direction along said second path, sensing when said sewing reaches a second predetermined position along said second path by responding to such condition and producing a second signal indicative thereof, in response to said second signal further advancing said filaments a predetermined distance along said first path, and upon said further advance of said filaments again reversing the direction of sewing so as to traverse said filaments along said second path reciprocally between said first and second positions.

References Cited

UNITED STATES PATENTS

2,059,845	11/1936	Bowersox.	
3,160,124	12/1964	Cash	112—2

FOREIGN PATENTS

903,164	2/1954	Germany.
14,196	9/1933	Great Britain.

JORDAN FRANKLIN, *Primary Examiner.*

J. R. BOLER, *Assistant Examiner.*