Sept. 19, 1944. E. NASSOUR 2,358,530

METHOD OF PRODUCING FIGURES FOR ANIMATED PHOTOGRAPHY

Original Filed Oct. 16, 1939 2 Sheets-Sheet 1

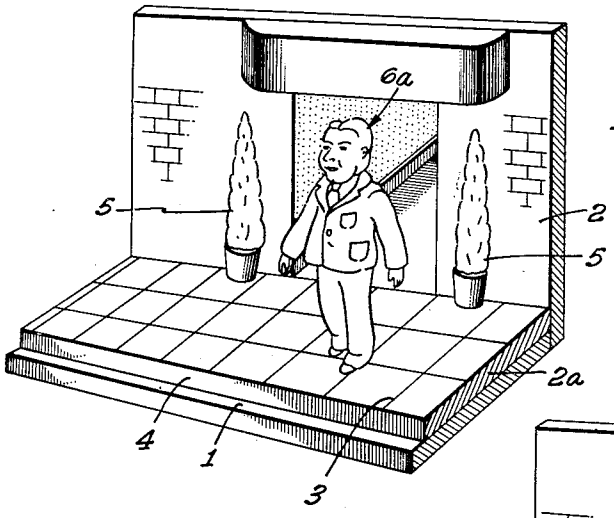

FIG. 1.

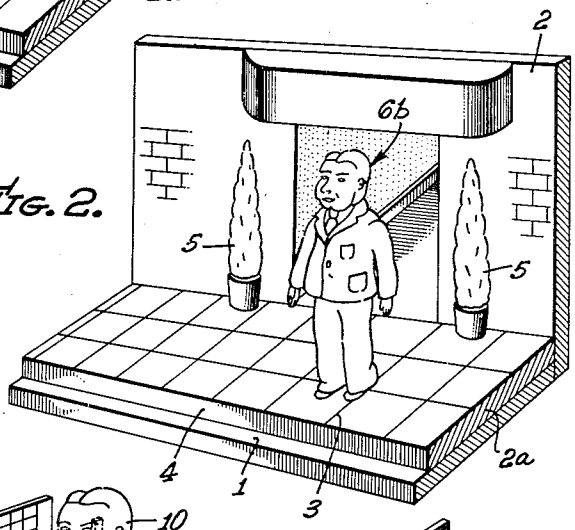

FIG. 2.

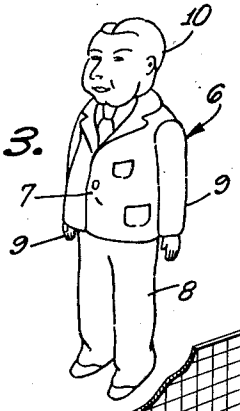

FIG. 3.

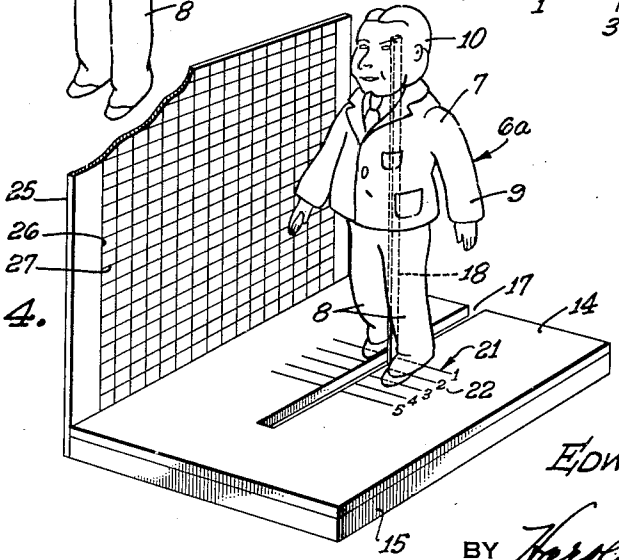

FIG. 4.

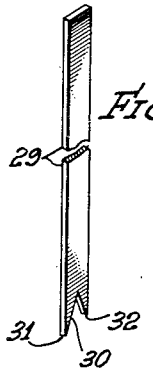

FIG. 9.

EDWARD NASSOUR,
INVENTOR.

BY Harold R. Scattergood

ATTORNEY.

Sept. 19, 1944. E. NASSOUR 2,358,530

METHOD OF PRODUCING FIGURES FOR ANIMATED PHOTOGRAPHY

Original Filed Oct. 16, 1939 2 Sheets-Sheet 2

FIG. 5.

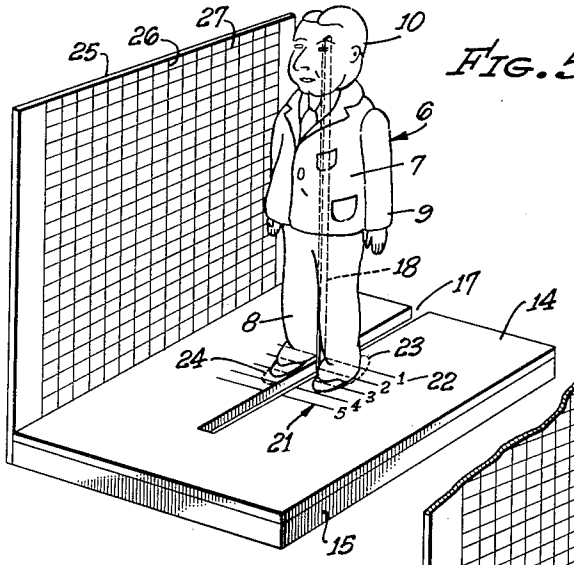

FIG. 6.

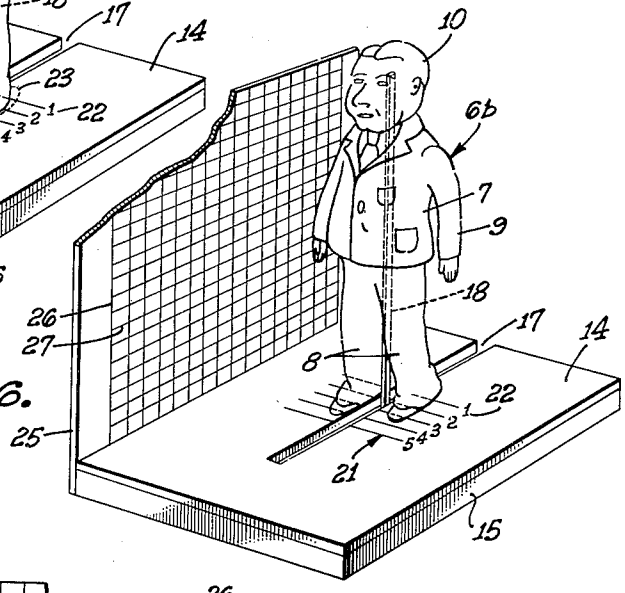

FIG. 7.

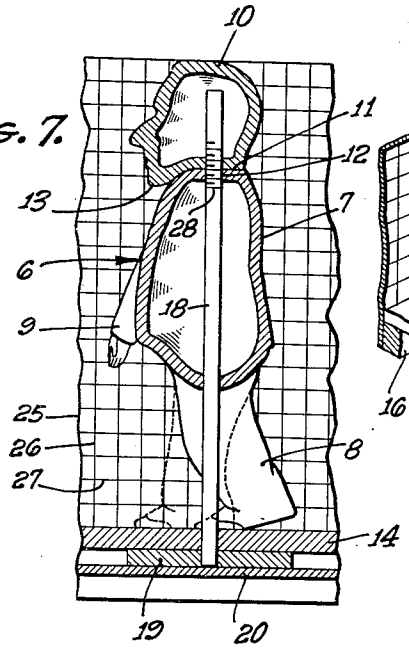

FIG. 8.

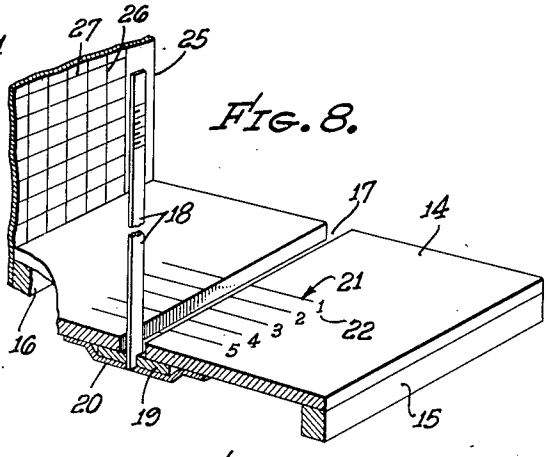

HOWARD NASSOUR,
INVENTOR.

BY Harold W. Hattingly

ATTORNEY.

Patented Sept. 19, 1944

2,358,530

UNITED STATES PATENT OFFICE

2,358,530

METHOD OF PRODUCING FIGURES FOR ANIMATED PHOTOGRAPHY

Edward Nassour, Los Angeles, Calif.

Original application October 16, 1939, Serial No. 299,644. Divided and this application February 1, 1943, Serial No. 474,282

4 Claims. (Cl. 88—16)

My invention relates to the production of animated pictures and has particular reference to a method of making dolls or other figures to be photographed in different animated aspects in the production of a series of pictures or motion picture film in which the dolls or other models will appear to have life-like motion.

This application is a division of my copending application Serial No. 299,644, filed October 16, 1939, and entitled "Apparatus for producing animated pictures" which issued as Patent No. 2,310,254 on February 9, 1943.

It has been the practice to produce animated pictures by means of step by step photography of sets of drawings or paintings in which each drawing or painting differs from the others of the set by depicting those objects or characters which are to be animated as being in a slightly different animative aspect.

Attempts have been made in the past to provide an improved illusion of realism over that derived by the photography of drawings or paintings. These prior attempts to produce such improved animated pictures have been characterized by the employment of flexible or plastic figures which are placed on a stage setting and photographed by a step by step process, the posture or animative aspect of these figures being altered between successive photographs taken and such alteration of the figures being permitted by reason of their flexible construction.

While these attempts do provide a greater illusion of realism than was provided by the previous methods of production, they have not been entirely satisfactory because of certain inherent disadvantages residing in the methods employed. Among these disadvantages is found the extreme difficulty with which these plastic figures are modeled into the next animative aspect without altering such parts of those figures as should remain unchanged. Inadvertent alteration of the parts intended to remain unchanged spoils the animation effect by tending to give a fuzzy or ragged contour to the pictures so photographed. Furthermore, a great deal of time is required in performing the photographing operation since much time is consumed between successive exposures in arranging and altering the aspect of the figure and its location on the setting so that this method of producing animated pictures is very costly.

Certain of the difficulties and disadvantages noted above can be overcome or eliminated by providing a plurality of duplicate figures, each different from the other by slight changes in position of limbs, torso or other parts of the figure, such changes representing the motion through which those parts should go in a series of steps to produce the desired animation. The first of these individual but slightly different figures is placed upon a suitable setting or background and photographed. Then the figure representing the next step in the animation is substituted for the original figure and a second photograph is made, and this process is repeated for each of the remaining figures in the sequence necessary to produce the illusion of animation, with the result that a much more realistic or life-like appearance may be given to the figures than would be possible if a single figure were used and the position of its limbs, torso or other parts was required to be altered between successive photographs.

However, in the making of such a series of individual figures, those parts of the figure not involved in the animation should be identical in all of the figures, and it is extremely difficult to individually form, carve or model the series of figures without some inadvertent alteration in those parts.

It is, therefore, an object of my invention to provide a method by which a series of individual figures may be made whereby portions of the figure involved in the animation may be provided in the different aspects of the animation but in which those parts of the figures not involved in the animation may be assured of identical shape, size and configuration.

Another object of my invention is to provide a method of modeling figures as set forth in the preceding paragraph which consists in producing a set or series of identical figures and then modeling or changing those parts of the figures involved in the animation to alter the relative positions of the component parts of the entire figure in accordance with the individual animation steps through which it is desired to cause the figure to appear to be moving.

It is an additional object of my invention to provide a method of making figures of the character set forth in which a plurality of sets of figure parts are molded and then assembled to provide a set of complete figures, each having a different posture or animative aspect.

Other objects and advantages of my invention will be apparent from a study of the following specifications, read in connection with the accompanying drawings, wherein:

Fig. 1 is a perspective view representative of a miniature stage and illustrating a miniature

figure placed thereon in a fixed animated position;

Fig. 2 is a view substantially identical to Fig. 1 but illustrating a second animated aspect and position of the figure which is shown in Fig. 1;

Fig. 3 is a perspective view illustrating the appearance of one form of miniature figure which may be used in the practice of my invention and illustrating the appearance of such figure before it is subjected to any modeling operations for the purpose of altering the posture or animative aspect of the figure;

Fig. 4 is a perspective view illustrating the manner in which a figure, such as that illustrated in Fig. 3 may be supported upon a guiding apparatus and modeled to provide the desired animative position associated with a specified location of the figure in the environment in which it is to be photographed;

Fig. 5 is a perspective view similar to Fig. 4 but illustrating the appearance of a figure and the guiding apparatus when the figure illustrated in Fig. 4 is removed and a second figure is substituted therefor and disposed in a position corresponding to a new location in the environment in which that figure is to be photographed;

Fig. 6 is a perspective view similar to Fig. 5 and showing the changes in the aspect of the figure illustrated in Fig. 5 which may be made by a modeler to cause that figure to assume the animative aspect properly associated with the second location of that figure in the environment in which it is to be photographed;

Fig. 7 is a longitudinal section through one of the figures and the guiding apparatus illustrating the manner in which the figure is supported upon the guiding apparatus for manipulation by the modeler;

Fig. 8 is a fragmentary perspective view with parts shown in section to illustrate the details of construction of one form of guiding apparatus which may be employed in the practice of the method of my invention; and

Fig. 9 is a perspective view illustrating a guiding member which may be employed to assist in properly locating the completed figure on the setting in which it is to be photographed.

Referring to the drawings, I have illustrated in Figs. 1 and 2 a typical miniature stage setting which might be used in the production of an animated series of pictures or motion picture film by sequentially photographing the set upon which will be successively placed one by one the individual models or figures representing the successive steps or positions the arms, legs or other parts of the figure would assume in the animation of such figure in motion relative to the set.

The particular typical set illustrated comprises a stage floor 1 disposed before a scenic back drop 2. The scenic back drop 2 may be embellished as desired and in the form illustrated is painted or inscribed to represent the front entrance of a building. In this case the stage floor 1 is fitted with another slab 2*a* which may be marked, as at 3, representative of squares which are normally marked off on concrete sidewalks. The upper slab 2*a* is preferably made somewhat narrower than the floor 1 of the set so that a forward edge 4 thereof may represent a curb defining the difference in elevation between the sidewalk and the street. Miniature stage properties, such as representations 5 of potted trees, may be disposed upon the stage floor as desired.

I have illustrated in Fig. 1 a miniature figure 6*a* comprising one of a set of similar figures 6, each of which is a replica or complete perspective representation of an object, the animation of which it is desired to portray. By complete perspective representation, I mean that the figures are substantial duplicates usually on a reduced scale of the objects they represent and that the figures are complete and entire, permitting them to be photographed at substantially any angle.

I have chosen for the purpose of illustration a man as the animated object represented by the figures 6, the figure 6*a* being one of the figures 6 having its component parts placed in such position as to represent an arrested animative aspect of a man leaving the entrance to the building and walking toward the curb. In case it is desired to photograph a sequence in an animated picture representative of a man leaving the front of the building and walking across the sidewalk to the curb, the photographer would employ a motion picture camera to expose one or more frames of a motion picture film to a scene such as that represented by Fig. 1. Thereupon the figure 6*a* would be removed from the miniature stage set and another similar figure 6*b* (see Fig 2) would be substituted therefor.

The figure 6*b* is identical with the figure 6*a* in all respects except that the arms and legs and head thereof occupy slightly different positions relative to each other and relative to the torso so as to represent a later animative aspect of the figure during the traversal of its course from the front of the building to the curb at the edge of the sidewalk.

As soon as the figure 6*b* has been placed in its new desired position the miniature stage set is again photographed by the motion picture camera. This operation of photographing the set with one of the figures 6 in place, removing that figure and substituting another similar figure representative of a later animative aspect of the scene, photographing the set with the substituted figure in place and so forth is continued until the desired sequence is completely photographed to provide a film which comprises successive photographs corresponding to successive phases of the animation.

The figures 6*a*, 6*b* and other additional and similar figures are all preferably modeled and prepared ready for photographing prior to the performing of the photographing process so that the removal of the figure 6*a* and the substitution of the next figure 6*b* in its new position on the miniature stage set may be performed without appreciable delay.

I have devised a method of preparing each of the figures constituting the set of figures 6 which permits a complete set of these figures to be prepared prior to the time the desired sequence is to be photographed so as to permit the most economical use of time in the photographing operation. Each of the figures employed is preferably molded from clay or similar material and constructed along the lines illustrated in Fig. 7. Each of the figures preferably includes a body or torso portion 7 to which is attached by any suitable means legs 8 and arms 9. A head 10 is preferably molded separately and formed with a flat undersurface 11 at the neck line adapted to rest upon a similar horizontal surface 12 disposed at the upper end of the torso 7. The chin line of the figure, such as that indicated at 13 in Fig. 7, is preferably brought down below the level of the surfaces 11 and 12 so as to constitute a guard or shield to hide the junction be-

tween the head and the torso. The torso 7, legs 8, arms 9 and head 10 are all preferably made hollow by the employment of any of the well known hollow molding processes.

In the practice of the method of my invention a considerable number of identical figures 6 are molded from clay or other material capable of remaining somewhat plastic for a considerable period of time. Such figures, if designed for use in filming the above noted sequence, are preferably all molded in the form illustrated in Fig. 3; that is with the legs straight, the arms hanging loosely at the sides and the head having a face with substantially no expression reflected therein. Each of these figures will then be molded by an artist or other person skilled in the manipulation of such plastic figures into independent figures representative of different animative aspects of the sequence to be filmed, such as those represented by the figures 6a and 6b.

I prefer to employ a guiding and indexing apparatus as an aid to the modeler in reforming or altering the postures and aspects of each of the figures constituting the set of identical figures 6. This apparatus may be constructed along the lines illustrated in Figs. 7 and 8 and include a horizontally disposed base portion 14 which may be supported in spaced relation to a bench top or similar working surface by means of longitudinally extending supporting members 15 and 16. The base portion 14 is provided with a longitudinally extending slot 17 adapted to receive a vertically extending supporting rod 18. The rod 18 is mounted for slidable movement along the slot 17 as by means of a plate member 19 secured to the lower end of the rod 18 and received in a guide channel 20 affixed to the undersurface of the base portion 14 and extending along the slot 17. It will be observed that with this construction the rod 18 may be slid along the slot 17 and be maintained in a substantially vertical position at any point along the slot.

The base portion 14 is also preferably inscribed with a set of indexing marks, such as those indicated at 21 in Fig. 8. These marks are spaced apart a distance equal to the distance the figure to be photographed is intended to be moved between successive photographing operations. Each of the marks 21 is preferably identified with an index number (22 in Fig. 8) which corresponds to the identifying markings which will be placed upon each of the figures after they are modeled.

The steps of preparing the individual members of the set is illustrated in Figs. 4, 5 and 6. Referring to Fig. 4 I have illustrated therein one of the figures 6 as having been placed upon the guide rod 18, this rod being received in suitable openings formed in the upper and lower ends of the torso 7 and in the lower surface of the head 10. This figure is also represented as having had its arms, legs and face altered from the positions which those members occupied at the time the figure was removed from the mold to a new position causing the figure to assume an animative aspect representative of the first photographing operation and identical with that illustrated in Fig. 1. This being the first of the figures to be photographed in the sequence, this modeling operation is performed with the guide rod 18 disposed opposite the first of the index marks 21. As soon as the artist who performs this modeling operation has imparted to the figure the desired animative characteristics, the position of the arms and legs and the facial expression are carefully noted and the artist also records the leg positions by marking upon the base portion 14 the outline of the figure's feet so that after the figure is removed there will be left these marks indicative of the positions occupied by the feet of the first figure 6a. This figure 6a is then removed from the supporting rod 18 and subsequently hardened by any suitable means as by firing.

The artist then takes a second one of the figures 6 and after moving the guide rod forwardly to a position opposite the second one of the indexing marks 21 places the figure 6b thereon. The position of the apparatus and the figure 6b at this phase of the modeling operation is indicated in Fig. 5. It will be observed that the positions of the arms and legs differ materially from the positions which were occupied by the corresponding members of the preceding figure 6a, this difference in position being clearly observed through the use of the marks 23 and 24 which were made by the modeler in outlining the feet of the figure 6a. Using these marks as a guide the modeler then models the still plastic figure to bring the various members of the figure into positions representative of the second animative aspect of the sequence to be photographed, this disposition of the parts being indicated in Fig. 6. As soon as this figure is modeled to the artist's satisfaction, the figure is removed for hardening as was the figure next preceding. This operation is continued until a complete set of figures representing all of the animative aspects of the sequence to be photographed are prepared and ready for use. Each of the figures may be ornamented by painting or staining after they have been fired.

In the particular sequence of operations illustrated, it will be noted that in Fig. 4 the figure 6a is apparently carrying the weight upon its left foot, the right foot being disposed a short distance off of the surface upon which the figure is standing so as to be carried forward in the simulation of a step being taken by the figure. Attention is called to the fact that in modeling the next figure 6b the position of the left foot relative to the surface upon which the figure is standing must remain unchanged since the weight of the figure is being carried upon that foot. The artist accordingly marks the outline of the left foot as indicated by the marks 23 upon the base portion 14 so that when the guide rod 18 is moved to a position corresponding to the second animative position, the left leg of the figure 6 will be then modeled and displaced rearwardly until the left foot is disposed in a position congruent with the marks 23. In a similar manner the artist may, by means of the marks 24, indicate the desired position which is to be occupied by the right foot of the figure 6b so that when one of the figures 6 is disposed upon the guide 18 in the manner illustrated in Fig. 5 the amount of modeling and displacing of the right leg that must be performed may be readily observed.

Reference has been had hereinbefore to the fact that before removing from the supporting member 18 a finished modeled figure the artist carefully notes the positions of the arms, legs and head. I have found that the provision of a checkered background, such as that illustrated in Figs. 4 through 8, facilitates this operation of noting the relative positions of the parts. This background may, as illustrated, comprise a relatively thin sheet of material 25 secured in an

upright position to one edge of the base member 14 and disposed in a position extending parallel to the slot 17. The face of the sheet 25 which is directed toward the supporting member 18 is preferably marked in a checkered pattern by spaced horizontal and vertical lines 26 and 27. The manner in which the relative positions of the legs and arms may be noted is clearly brought out in Fig. 8. It will be seen by reference to this figure that by assigning proper identifying indicia to each of the horizontal lines 27 and each of the vertical lines 26, the locations of each of the parts of the figure will be readily noted by noting the apparent positions of these parts on such a checkered background.

While I have described the modeling operation as being concerned with the displacement of the arms and legs relative to the torso, it is to be understood also that this operation may be performed upon the still plastic heads to alter the facial expression of the figure in the desired steps so that if, as illustrated in Fig. 1, the model is leaving the building with a smiling expression on his face which is intended to become sober and unsmiling by the time he reaches the curb, the lips and cheek of the figure 6*a* may be distorted from their normal expressionless position to one of a man smiling.

In a similar manner the face of the figure 6*b* may be caused to assume an expression representative of a transitory phase between a smiling expression and a sober expression by modeling the normally inexpressive features molded on the figure 6 into the desired expression of a man smiling but not as broadly as the smile indicated on the face of the figure 6*a*.

With the figure construction which I have illustrated, it is possible to photograph certain animated sequences by merely interchanging heads upon a single body portion of the figure. For example, if it were desired to film a sequence portraying the figure talking or singing without any accompanying motion of arms and legs, it would be necessary only to prepare a single body portion having its arms and legs disposed in the desired positions and to prepare a number of heads to be substituted on the single body portion, each of the heads being modeled so as to represent successive phases in the animation of the figure characterizing the singing or speaking operation.

I have referred to the molding of each of the figures 6 as a two-part figure, that is, with the head molded in one part and the torso with arms and legs attached as a second part. I have discovered also that the modeling operation may be expedited if the molding operation is performed so as to provide a plurality of sets of independent parts which are merely assembled to form a set of the figures 6. In accordance with this method a set of heads, a set of right arms, right legs, left arms, left legs, and torsos would all be molded independently of each other.

In preparing the figures for photographing, the modeler would cause the torsos of all of the figures to be preliminarily fired and hardened sufficiently to be normally self-supporting and resistant to deformation since, in most cases, the configuration of the torsos does not change from one animative aspect to the next. In preparing the figure 6*a* the modeler would then attach the required arms and legs to the partially hardened torso while these arms and legs are still in their plastic state and then model these arms and legs into the positions representative of the desired animative aspect. After the figure 6*a* is prepared in this fashion, the entire figure may then be fired so as to complete the hardening of the torso and to completely harden the legs and arms attached thereto.

This method has the advantage of avoiding any danger of changing the contour or appearance of the torso inadvertently by modeling operations performed on the arms and legs. Furthermore, by only partially firing the torso so as to harden it and prevent distortion thereof, the artist is not precluded from firing the complete figure sufficiently to completely harden the arms and legs since the amount of over-firing which is in this fashion imparted to the partly hardened torso is not sufficient to cause burning thereof.

While the supporting rod 18 may be made of any desired shape and the holes provided in the various figures 6 for receiving the rod 18 may also be made of any desired shape, I have found that distinctly advantageous results ensue if the rod 18 is made of a rectangular or similar cross section providing a major axis which extends parallel to the slot 17 and is adapted to be closely received in elongated openings provided in the figures 6. Providing a supporting rod of this shape insures that the figure 6 will, at all times during the modeling operation, be held in the proper position facing along the length of the slot 17 and prevented from turning at an angle to the desired direction of movement of the model.

If desired a series of spaced indexing marks or graduations 28 may be provided on the rod 18 so that the vertical positioning of the torso 7 of the figure 6 may be readily controlled by observing the location of the upper surface 12 thereof relative to these indexing marks. By this means the body of each of a series of figures may be held in precisely the same vertical position or may be caused to appear in the completed sequence as having a smooth, flowing, vertical movement as in the case of a man walking.

The employment of rectangular holes in the body of the figures 6 for receiving the rectangular supporting rod 18 permits the use of a guiding or locating device 29, such as that illustrated in Fig. 9, to assist the photographer in properly locating each of the figures 6 in their correct locations on the setting in which they are to be photographed. This guiding or locating member 29 is preferably formed with a cross section identical with the contour of the holes which are provided in the body of the figures 6 so that the body portion of the figure may be slipped thereover. The lower end of the guiding member 29 may be provided with a V-shaped notch 30 defining a pair of spaced points 31 and 32. These points are preferably spaced from each other by a distance equal to the amount of forward movement represented by successive animative phases of the sequence to be photographed.

In employing the locating device 29 the points 31 and 32 are so disposed on the stage setting as to cause a line passing through these points to lie in the desired direction of movement of the animation represented by successive figures. Furthermore, the points 31 and 32 may be employed in caliper fashion to mark on the floor of the stage setting the next desired position of the next figure which is to be substituted for the figure which is mounted on the locating device 29. For example, assuming that the point 31 is disposed

to the front or in the desired direction of movement, a mark made by that point on the floor of the stage setting will comprise the location of the point 32 when the next figure is placed on the setting. After the figure had been located as desired by this means, the locating device 29 is removed upwardly through the figure leaving the figure standing in the proper desired location and then the head 10 thereof is placed on the figure and the figure and setting then photographed.

It will be observed that I have provided a method of preparing a set of figures to be used in this photographing process which permits each of the figures to be characterized by identical parts and embellishments in those places where such parts and embellishments are not altered by the animation of the figure.

It will be further observed that the method of preparing the figures which I have set forth hereinbefore permits the rapid and accurate modeling of a relatively large number of these figures in a much shorter time than would be required by any other known method of modeling. Attention is called to the fact that the accuracy and speed with which this modeling process may be carried out is enhanced through the use of the guiding and indexing apparatus.

While I have shown and described the preferred embodiment of my invention, I do not desire to be limited to any of the details of construction shown or described herein, except as defined in the appended claims.

I claim:

1. The method of making figures to be successively photographed in the production of animated pictures which comprises producing a plurality of sets of figure parts from a plastic material, each of the parts in each set being identical, partially hardening the parts comprising certain of the sets to resist distortion, assembling from the parts thus produced a plurality of figures each having one or more plastic parts and one or more partially hardened parts, modeling the plastic parts to impart to each of the assembled figures animative aspects different from those of the others, and then further hardening each of the assembled figures to complete the hardening of the previously partially hardened parts and to harden the other parts to resist further distortion.

2. The method of making figures to be successively photographed in the production of animated pictures which comprises molding a plurality of sets of figure parts from clay, each of the parts of each set being identical, partially firing the parts comprising certain of the sets to harden them sufficiently to resist distortion, assembling from the parts thus produced a plurality of figures each having one or more plastic parts and one or more partially hardened parts, modeling the plastic parts to impart to each of the assembled figures animative aspects different from those of the others, and then firing each of the assembled figures to complete the hardening of the previously fired parts and to harden the other parts to resist further distortion.

3. The method of making figures representative of successive phases in the animation of a living being having feet and legs during the action of walking on a surface which consists in molding a set of identical figures of said being from a plastic material, and modeling each of the figures in succession into positions representative of phases of said walking action different from those of the others by placing one of the molded figures upon a surface in a location representative of the location of the object in the corresponding one of said phases, marking on said surface the outline of those of said feet intended to be resting thereon, removing said one figure from said surface, placing each of the others of said figures before modeling upon said surface in successive locations representative of the successive locations of said object in the succeeding later phases, and modeling said other figures into positions bringing those of said feet intended to be resting on said surface into register with the outline on said surface of the next preceding figure to provide figures representative of successive later phases of said walking action.

4. The method of making figures representative of successive phases in the animation of a living being having feet and legs during the action of walking on a surface which consists in molding a set of identical figures of said being from a plastic material, during said molding providing in identical locations in each of said figures a rectangular opening, and modeling each of the figures in succession into positions representative of phases of said walking action different from those of the others by placing upon a horizontal supporting surface an upwardly extending guiding bar contoured to be closely received within the opening in said figures, said guiding bar being placed upon said surface in a location representative of the location of the object in the first phase of said walking action, placing one of the molded figures upon said supporting surface with said guiding bar received in said opening, marking on said surface the outline of those of said feet intended to be resting thereon, removing said one figure from said surface and from said bar, moving said bar on said surface to successive locations representative of the successive locations of said object in the succeeding later phases of said walking action, placing the others of said figures before modeling upon said surface and upon said guiding bar in each of the successive locations thereof, and modeling said other figures into positions bringing those of said feet intended to be resting on said surface into register with the outline on said surface of the next preceding figure to provide figures representative of successive later phases of said walking action.

EDWARD NASSOUR.