J. B. GATHRIGHT.

FAUCET.

No. 251,775. Patented Jan. 3, 1882.

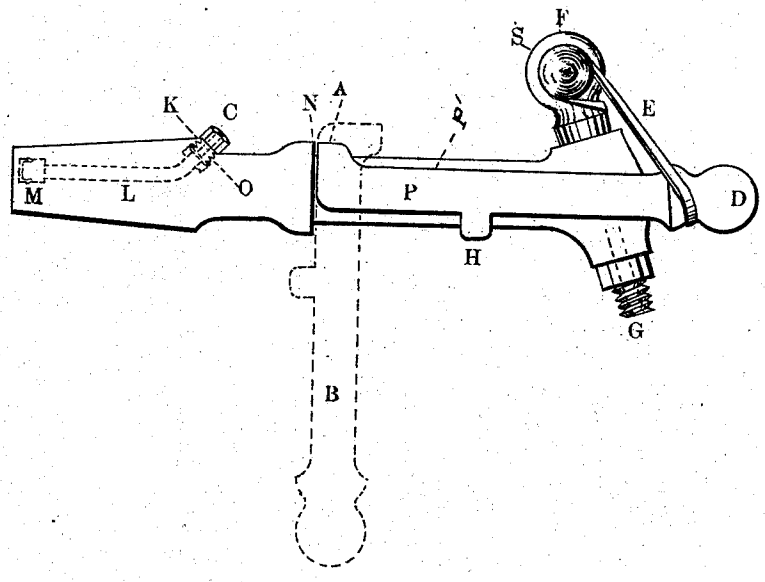

WITNESSES:

G. W. Brady

William R. Stevens

INVENTOR.

Josiah B. Gathright

N. PETERS, Photo-Lithographer, Washington, D. C.

UNITED STATES PATENT OFFICE.

JOSIAH B. GATHRIGHT, OF LOUISVILLE, KENTUCKY.

FAUCET.

SPECIFICATION forming part of Letters Patent No. 251,775, dated January 3, 1882.

Application filed February 9, 1880.

To all whom it may concern:

Be it known that I, JOSIAH B. GATHRIGHT, a citizen of the United States, residing at Louisville, in the county of Jefferson and State of Kentucky, have invented certain new and useful Improvements in Faucets; and I do hereby declare the following to be a full, clear, and exact description of the invention, such as will enable others skilled in the art to which it appertains to make and use the same, reference being had to the accompanying drawing, and to the letters or figures of reference marked thereon, which form a part of this specification.

The figure of the drawing shows an ordinary faucet in other respects with my improved driving-head attached in one of the ways hereinafter described.

My invention consists in so constructing the driving-head of the faucet that a blow upon it is imparted to the faucet at a point behind the plug or cock, thereby avoiding the shock and frequent injury to this delicate part. The invention also enables me to construct the driving-head of cheaper and at the same time harder metal than that used for the body of the faucet. While brass is better adapted for the body of the faucet, the cheaper and harder metal iron is more suitable for driving-heads.

As will be seen in the drawing, the driving-head D branches into prongs P and P′, in front of the plug F, the prongs extending back and abutting against shoulder N on the barrel of the faucet. It may be constructed rigidly with or secured to the faucet, or entirely separate and of different metal, and removable at pleasure, as seen in the drawings. The bars H and A serve to connect and strengthen the prongs P and P′, and also to align the driving-head with the faucet, and facilitate holding it in proper position for driving. This construction also enables one to put the driving-head on and take it off at pleasure, or let it hang out of the way, as indicated by dotted figure B. A small elastic band, E, serves to hold the head in position. When the head is constructed as shown in the drawing it can be removed at pleasure; but I do not wish to confine myself to the particular construction shown by the drawing, as this improved driving-head, with necessary extensions to deliver the blow behind the plug, may be constructed and attached in a great variety of ways.

What I claim as new, and desire to secure by Letters Patent, is—

1. As an article of manufacture, a faucet having its driving-head constructed separately, as shown and described.

2. In a faucet, the driving-head constructed separately and adapted to deliver the blow behind the plug, as shown and described.

JOSIAH B. GATHRIGHT.

Witnesses:

J. E. MCGRATH,

G. W. BRADEN.