May 2, 1939. E. N. BOWMAN 2,156,425

REMOVABLE COLOSTOMY POCKET AND RETAINING BELT

Filed Nov. 16, 1936

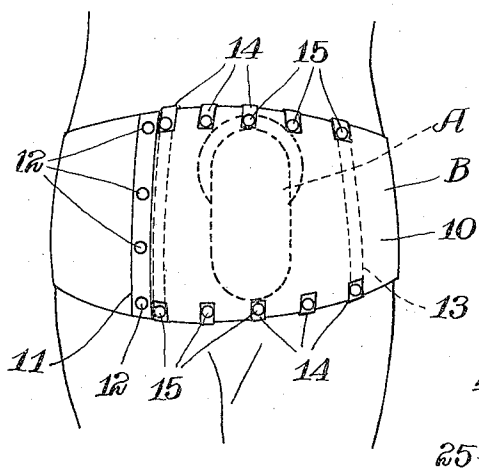

Fig. 1

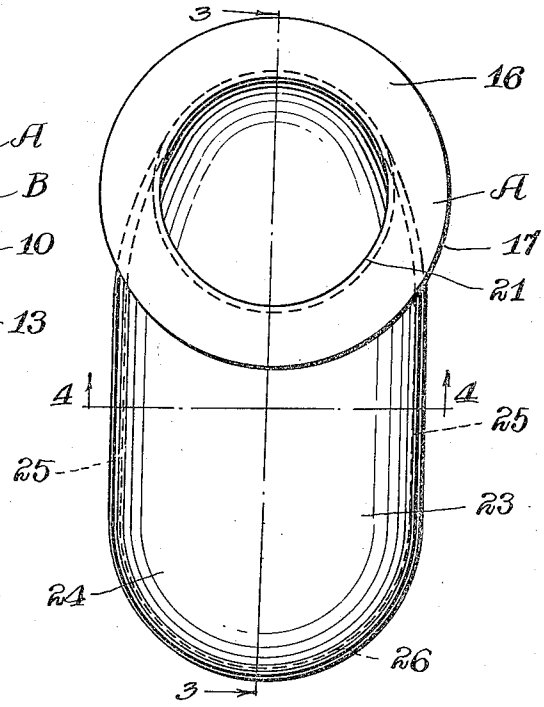

Fig. 2

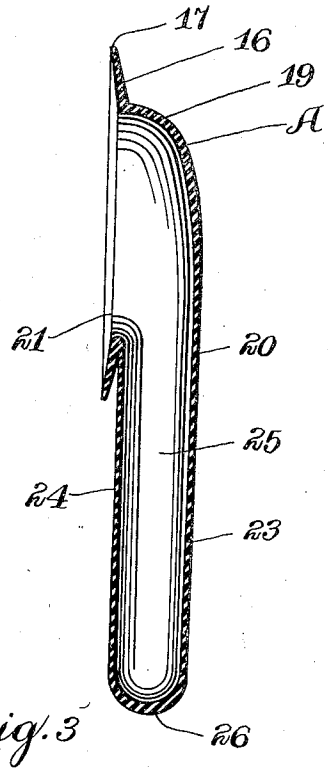

Fig. 3

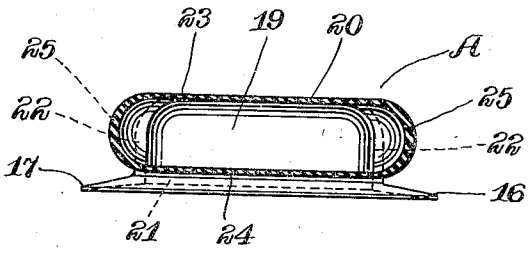

Fig. 4

Inventor
Emory N. Bowman

By Howard L. Fisher
Attorney

Patented May 2, 1939 2,156,425

UNITED STATES PATENT OFFICE

2,156,425

REMOVABLE COLOSTOMY POCKET AND RETAINING BELT

Emory N. Bowman, Rochester, Minn.

Application November 16, 1936, Serial No. 110,950

2 Claims. (Cl. 128—283)

My invention relates to a removable colostomy pocket and a retaining belt therefor, to hold the pocket in proper position. It is an object of my invention to provide a colostomy pocket which is enclosed in a belt so that the pocket itself will be entirely enclosed, and so as to present a closed surface to the colostomy opening when the pocket is being changed.

Colostomy belts have previously been used, and are known in the art. In a former patent to Myrtle A. Bowman, No. 2,002,931, such as belt was described. The belt is preferably formed with a removable inner lining member of rubber or the like which forms a removable pocket on one type. Pockets in the form of pouches held in place by straps have also been previously used. It has been difficult, however, to provide a sufficiently tight seal between such pockets and the body; and for this reason this type is not believed to be as effective as the belt type.

In the present invention, it is desired to provide a pocket which will fit closely against the body; and to hold this pocket in place by means of a belt in such a manner that the pocket is entirely enclosed, and so that the belt may act as a secondary protection. By this means, a constant protection may be afforded, as when the inner pocket is removed, the outer belt with its removable lining is in position over the opening. My pocket, when removed, may be readily cleaned, and may be turned inside out for this purpose.

Because of the fact that my colostomy pocket is to be enclosed within a flexible belt, it is necessary to provide a pocket which is formed of soft material, but which is reinforced in such a manner that the pocket will remain open at all times. Most pockets of this type would collapse if placed within the flexible outer belt. This would close the pocket, and do away with any advantageous features of the combination. This reinforcing is such that the even pressure of the belt over the entire surface of the pocket will be successfully resisted and the pocket held from collapse.

It is a feature of my invention that my pocket is formed with a substantially circular opening, and is provided with a depending pouch or sack. The circular opening makes my device adaptable for use over colostomy openings on both sides of the body, or for double openings. The material forming this pocket is at most places thin and readily flexible. However the portion extending over the opening, and the edges of the pocket, are of increased thickness, thereby maintaining the pocket open at all times regardless of the even outside pressure acting against the pocket and tending to collapse the same.

Most authorities agree that colostomy cups should not be worn all the time. Such cups are hard on the persons wearing them constantly, and ill effects are apt to result. By having the cup held in place by a belt as described, the wearer may be relieved by removing the pocket whenever desired with no ill effects. Furthermore, the belt extending over the cup or pocket tends to make this cup less visible beneath the clothes. Very naturally, the wearer would prefer to have the cup concealed as much as possible. The belt, extending over the cup, tends to make a much less noticeable arrangement.

These and other features as well as novel objects of my invention will be more clearly and fully set forth in the following specification and claims.

In the drawing forming a part of my specification:

Figure 1 is a front elevation view of my belt in proper position, showing my colostomy pocket enclosed therein.

Figure 2 is a front elevation view of my colostomy pocket.

Figure 3 is a cross-sectional view taken on the line 3—3 of Figure 2.

Figure 4 is a cross-sectional view taken on the line 4—4 of Figure 2.

My colostomy pocket A is adapted to be enclosed within the flexible belt B. The belt B is formed with a body portion 10 which may be formed of elastic material. The belt may be adjustable in length if desired. The ends of the belt are connected together along the line 11, and are held together by means of snaps 12 or by any other suitable means.

Extending over the colostomy area of the belt, I provide a thin rubber lining pocket member 13 having marginally protruding tabs 14 having snaps 15 thereupon which cooperate with cooperating snap means on the outer surface of the belt body portion 10. The lining member 13 is in this manner secured to the body portion of the belt in a manner so as to cause no undesirable pressure against the body of the wearer.

The pocket 13 is connected by the tabs 14 secured at both the top edge and the lower edge of the belt B. The inner lining member 13 in this way covers the entire area of the colostomy, and acts as a protection for the belt proper. No portion of the belt touches the body in the area of the colostomy, and accordingly only the inner rubber liner 13 need be changed and cleaned.

The pocket may be replaced with a substitute pocket during this period if desired.

My colostomy pocket A comprises a ring 16 adapted to contact the surface of the body. The ring 16 is provided with a thin feather edge 17, so that the edge of the ring will flex with the body, and will not dig into the surface of the body. This feather edge 17 may be seen in Figures 3 and 4 of the drawing. Because the ring 16 is substantially round, the pocket A is equally well suited for openings on either side of the body.

The surface of the ring 16 which contacts the body is not flat, but is concave, so that the thin feather edge 17 first contacts the body. The pressure of the belt B upon the pocket causes the ring 16 to be pressed substantially flat against the body, the edge bending with the pressure and providing a tight seal between the ring 16 and the surface of the body. If the pocket were formed of stiff or rigid material, it would be undesirable to use such a construction, as the thin feather edge 17 would dig into the body. However, as the pocket A is formed of softer material, such as rubber, this thin edge will conform with any irregularities in the surface of the body and maintain an effective seal.

From the inner edge of the ring 16 a pocket wall extends. As shown in Figure 3 of the drawing, the wall 19 at the top of the ring 16 projects outwardly and along a curve, merging into the outer wall 20 forming one wall of the pocket A. As shown in this figure, the wall 19 is thicker than the wall 20 of the depending pouch portion of the device; and this increase in thickness is sufficient to hold this wall 19 in proper position spaced from the opening 21 of the ring 16.

The side walls of the upper portion of the pocket extend outwardly from the inner edge of the ring 16. These side walls 22 may be seen in dotted outline in Figure 4 of the drawing. As may be seen from the drawing, these side walls are much thicker than the walls of the pocket itself, and therefore support the upper portion of the pocket A spaced from the opening 21 of the ring 16.

Figures 1, 3 and 4 of the drawing show the pocket A provided with a depending pouch portion 23 of which the wall 19 is one outer wall. An inner wall 24 extends substantially parallel to the outer wall 19 by arcuated sides 25, and a rounded arcuated bottom edge 26. The arcuated walls 25 and 26 are substantially thicker than the inner and outer walls 24 and 19, and do not as easily compress, thus resisting the effort of the belt B to flatten or collapse the depending pouch portion 23. The gradually increasing thickness of the walls, however, to a central point therein causes the edges of these walls 25 and 26 to flex more readily than the central portions thereof, thus providing a wall which will compress to some extent, and which will not dig into the body; but which will also not compress due to outside pressure of the belt thereupon.

The necessity of providing a pocket which will not compress for use in combination with a belt pressing the entire pocket against the body may be readily understood. The particular manner in which the pocket A is reinforced in order to prevent collapse of the body without providing an edge uncomfortable to the wearer may be readily understood. Virtually any type of edge, if stiff enough to hold the pocket open, will dig into the body of the wearer. The applicant provides a stiff edge with rounded tapering walls merging into the thinner inner and outer walls. The tapering of the thickness of these walls acts to cause them to bend just the desired amount, and to cushion the stiff central portion of the side and bottom walls.

It may be seen that my pocket A may be enclosed within the outer belt A and be pressed against the body of the wearer without causing excess discomfort. When the pocket A is removed, the belt B will still protect the wearer, the pocket 10 covering the colostomy opening and protecting the belt itself.

Although I have illustrated a preferred embodiment of my invention, it will be readily understood that various changes coming within the spirit of my invention may suggest themselves to those skilled in the art, and hence I do not wish to be limited to the specific form shown or uses mentioned, except to the extent indicated in the appended claims, which are to be interpreted as broadly as the state of the art will permit.

I claim:

1. A colostomy pocket comprising a marginal portion adapted to contact the body about the colostomy opening, a depending pouch portion connected to said marginal portion, said pouch portion comprising a pair of parallel walls connected by an edge wall, said edge wall being thicker than said inner and outer walls to prevent collapse of said pouch portion.

2. A colostomy pocket comprising a marginal portion adapted to contact the body about the colostomy opening, a depending pouch portion connected to said marginal portion, said pouch portion comprising a pair of parallel walls connected by a continuously arcuated edge wall, said edge wall being substantially thicker at its center than adjacent its connection with said parallel walls.

EMORY N. BOWMAN.