United States Patent

Moor

[15] **3,675,569**

[45] **July 11, 1972**

[54] **ROD COIL PRESS**

[72] Inventor: **Herman L. Moor**, Chicago, Ill.

[73] Assignee: **Braner Engineering, Inc.**, Chicago, Ill.

[22] Filed: **Oct. 5, 1970**

[21] Appl. No.: **78,006**

[52] **U.S. Cl.** ..... **100/7**, 100/3, 100/12, 100/26, 100/269 R

[51] **Int. Cl.** **B65b 13/02**

[58] **Field of Search** 100/3, 7, 12, 28, 264, 295

[56] **References Cited**

UNITED STATES PATENTS

3,548,739	12/1970	Glasson	100/7
3,129,658	4/1964	Valente	100/12 X
2,883,925	4/1959	Pritchard et al.	100/12 X
3,195,444	7/1965	McLean	100/12 X
3,212,429	10/1965	Fay et al.	100/12 X
3,498,212	3/1970	Boehm	100/12 X

Primary Examiner—Billy J. Wilhite
Attorney—Oltsch & Knoblock

[57] **ABSTRACT**

A rod coil press having a coil carrying arm swinging to and from loading, compacting and unloading positions. The arm is Y-shaped in cross section and one part thereof is extensible to a coil-diameter-controlling position and retractable to a coil-release position. A compactor unit shifts toward and from the arm which interfits therewith in compacting position. A strapping assembly is shiftable between retracted and operative positions and has a plurality of strapping mechanisms. Strap guides are carried by the coil carrying arm and the compactor unit and cooperate with the strapping mechanisms to apply a plurality of straps through the eye of the coil and around the exterior of the coil to be tensioned and sealed by the strapping mechanisms.

19 Claims, 13 Drawing Figures

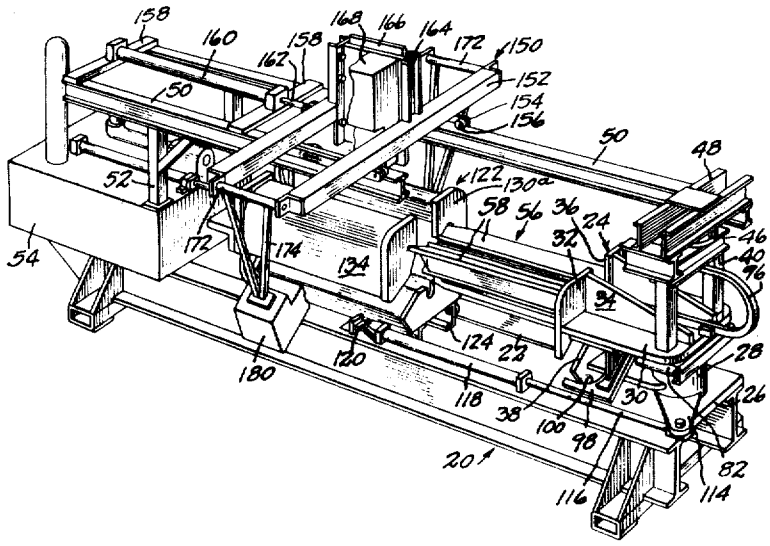

Fig. 1

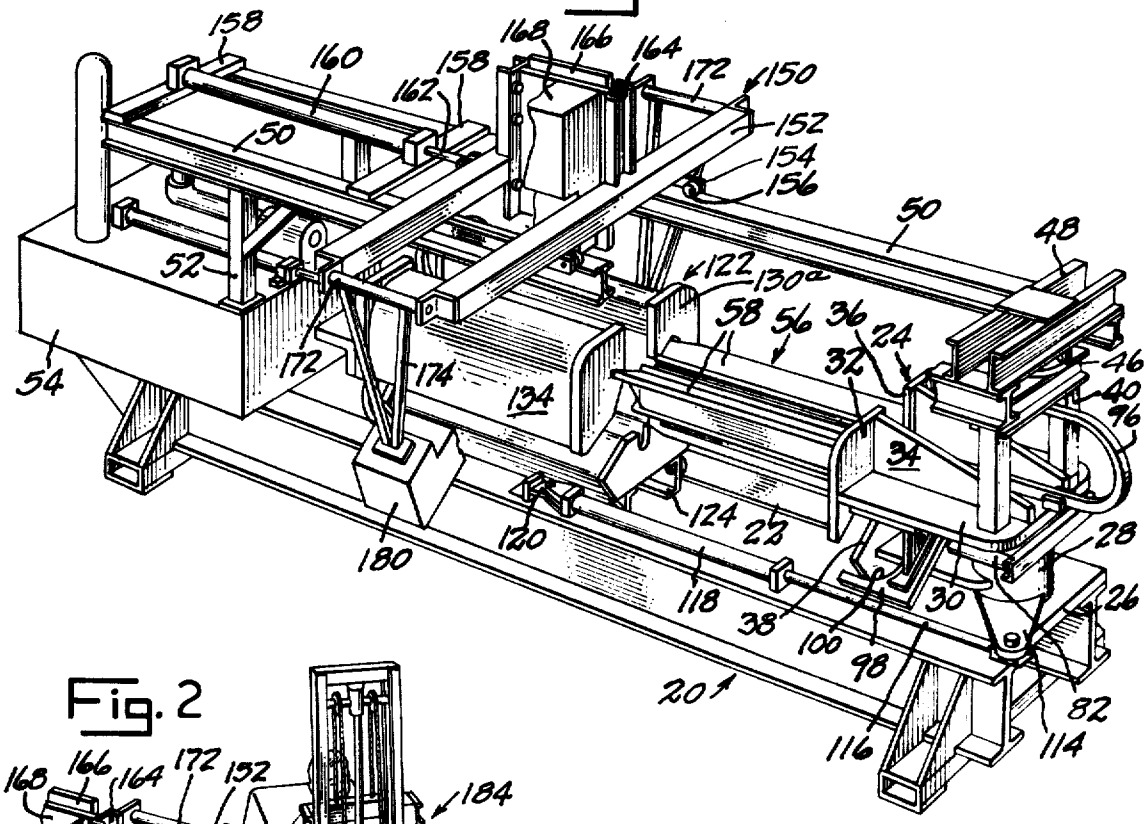

Fig. 2

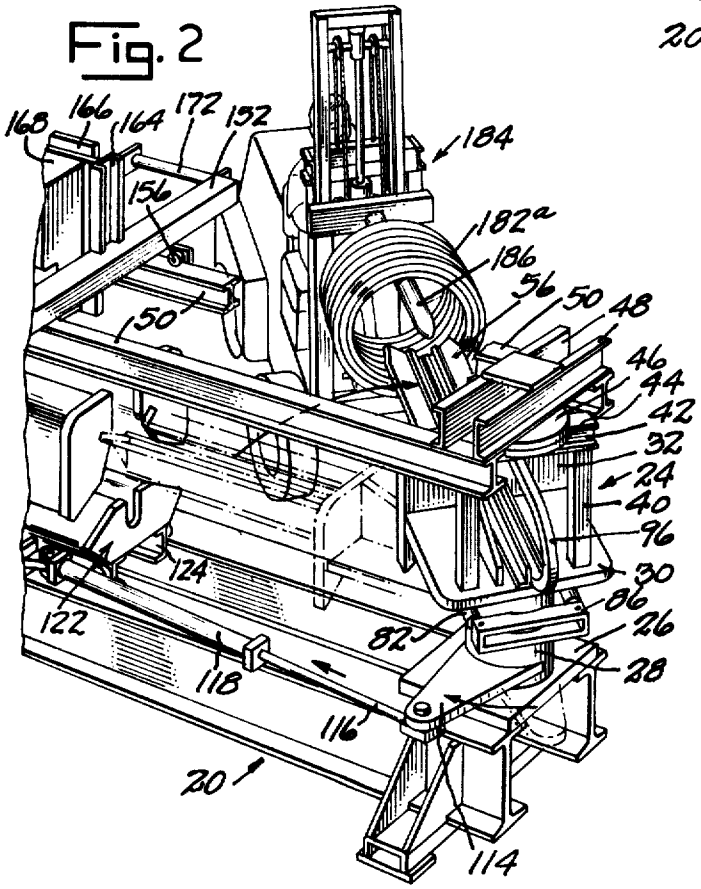

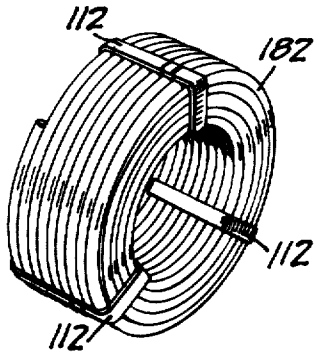

Fig. 3

INVENTOR.
HERMAN L. MOOR

BY
Oltsch & Knoblock
ATTORNEYS

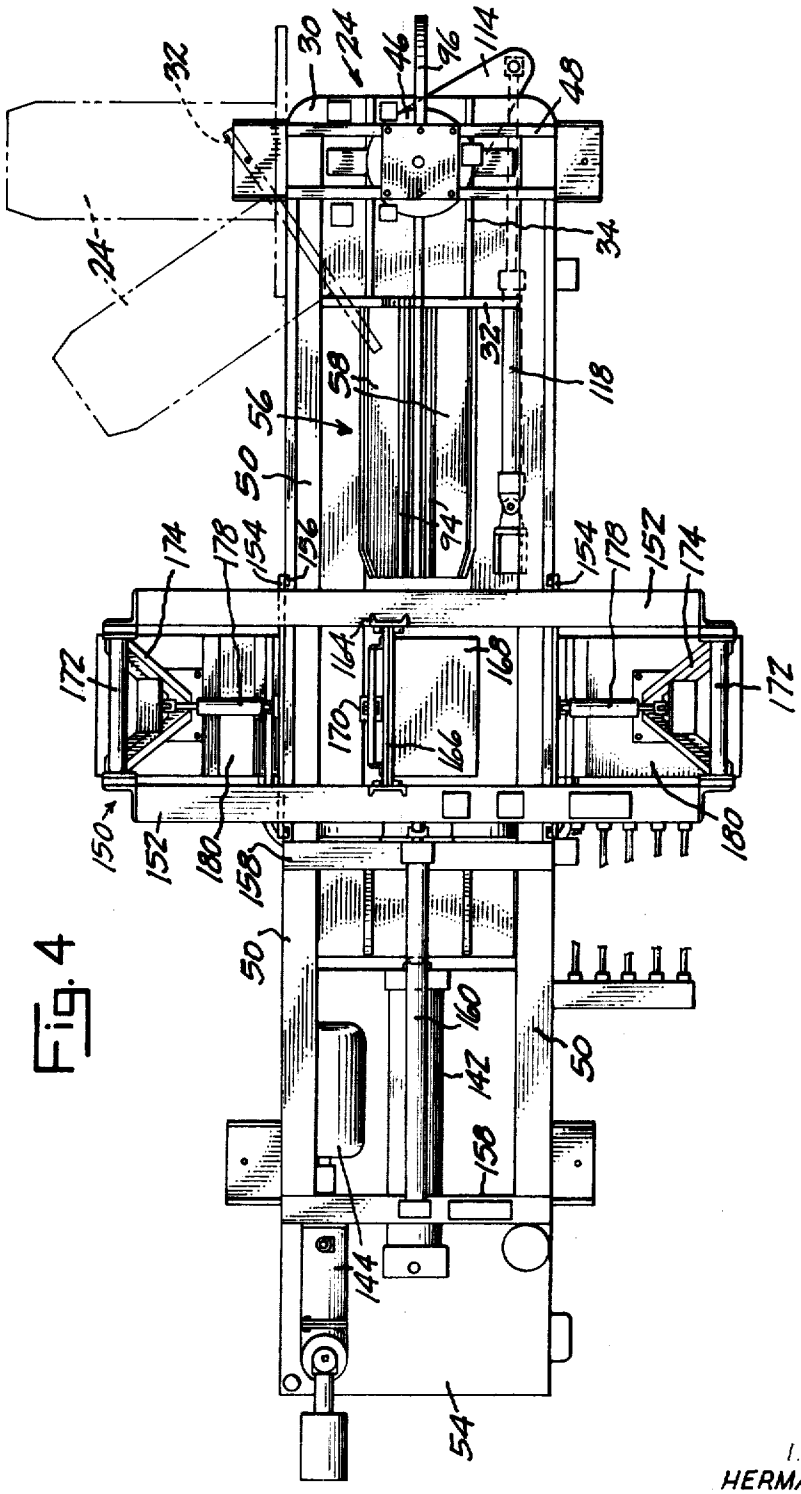

Fig. 4

INVENTOR.
HERMAN L. MOOR

BY
Oltsch & Knoblock
ATTORNEYS

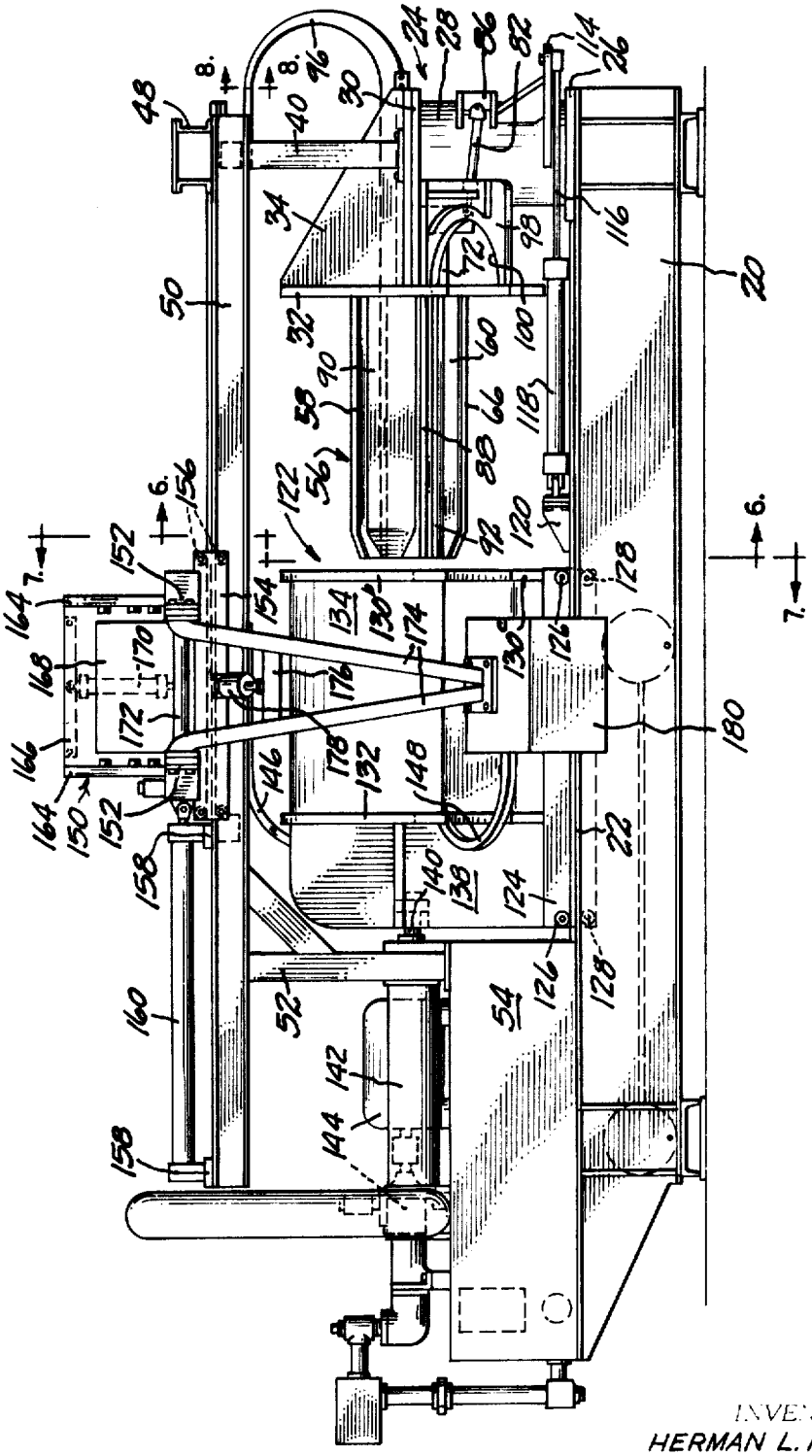

Fig. 5

INVENTOR.
HERMAN L. MOOR

BY
Oltsch & Knobloch

ATTORNEYS

Fig. 6

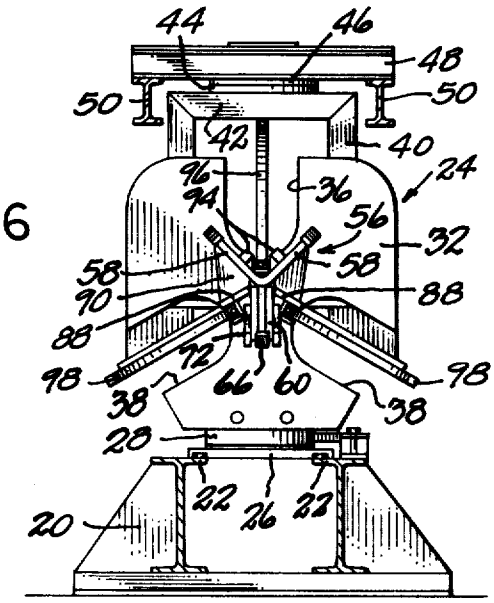

Fig. 8

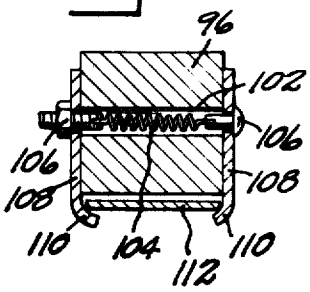

Fig. 7

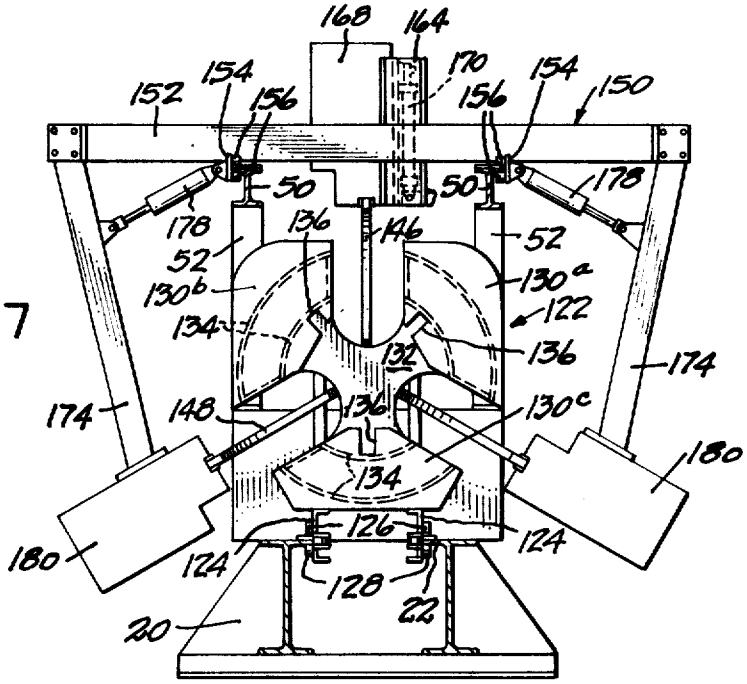

INVENTOR.
HERMAN L. MOOR

BY
Ottesen & Knobloch

ATTORNEYS

Fig. 9

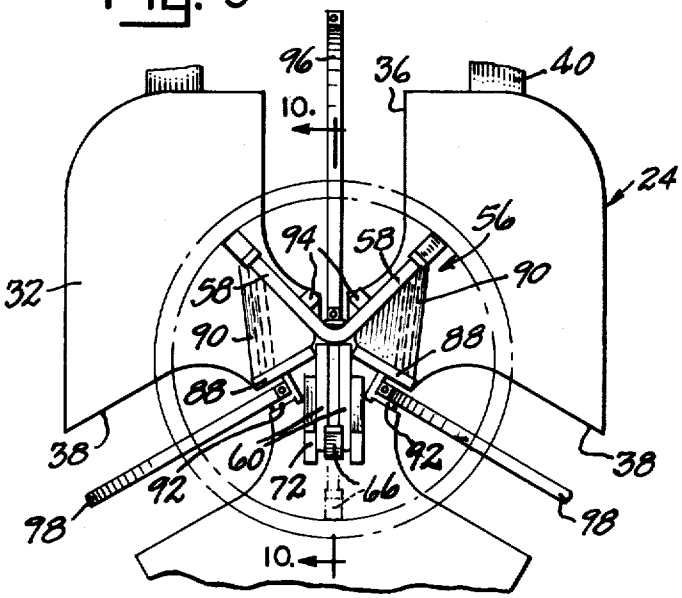

Fig. 12

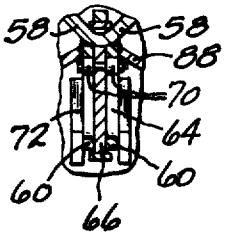

Fig. 13

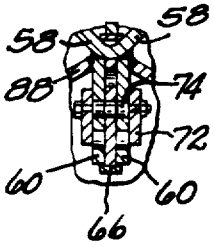

Fig. 10

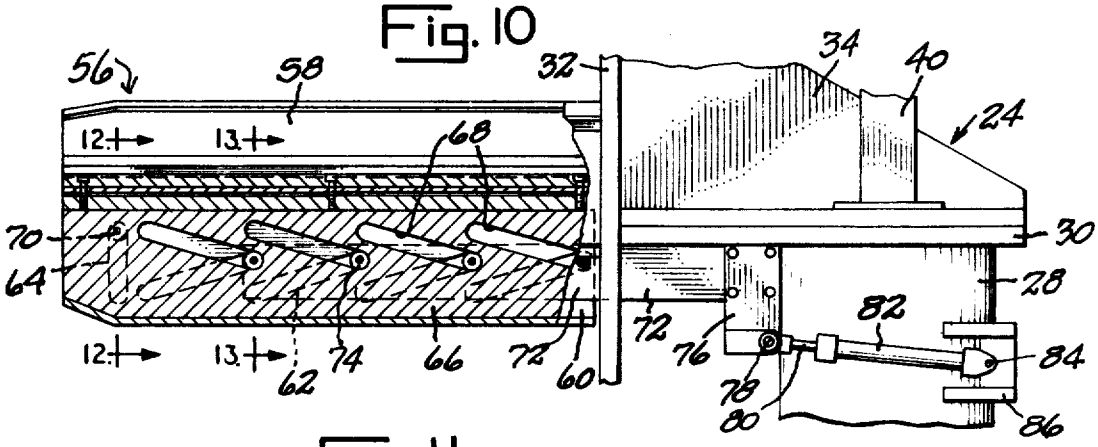

Fig 11

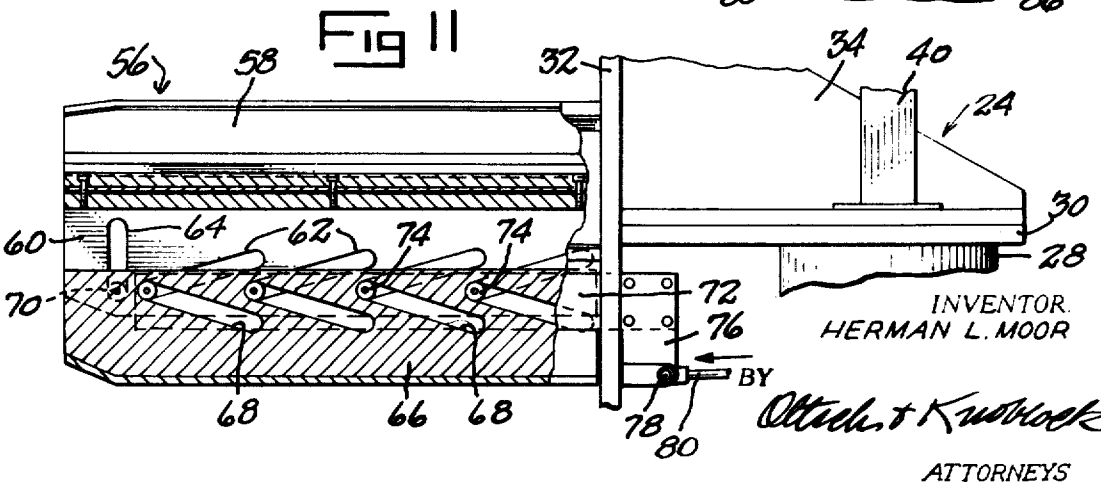

INVENTOR.
HERMAN L. MOOR

BY Ottesen & Kurbrock

ATTORNEYS

ROD COIL PRESS

This invention relates to improvements in a rod coil press. More particularly, it relates to a press for coils of steel rod from ¼ inch to 2 inch diameter which are compacted and strapped to facilitate handling, storage, shipment and annealing thereof.

Rod coil presses available heretofore have been subject to numerous limitations and objections. Thus prior presses have been unduly heavy, complicated, slow to operate, difficult to lubricate and maintain, and usually have been sensitive to wild loops or strands which interfere with closure of strap tracks or guides and to various other malfunctions and to damage thereof. Prior machines also have been characterized by limited capacity as to coil length and weight and by difficulty of maintaining a predetermined inner coil diameter.

It is a primary object of this invention to provide a device which overcomes or eliminates the problems and limitations of prior devices and which is subject to minimum requirements for lubrication and for operating maintenance.

A further object is to provide a device of this character having a novel construction of a coil carrier or horn.

A further object is to provide a device of this character having a coil carrier with novel means for sizing the interior diameter of the coil as it is being compacted.

A further object is to provide a device of this character having a novel arrangement of coil carrier and compactor which interfit in a manner to accommodate rapid and convenient application and tensioning of straps utilized to secure the coil in compacted condition.

A further object is to provide a device of this character having a coil carrier rotatable between an operative position aligned with a compactor and angularly displaced loading and unloading positions, and having strap guide means of novel character.

A further object is to provide a device of this character having a coil carrier or horn of substantially Y-shape in cross section and shiftable between retracted loading position and extended coil-diameter-controlling dimension, and which accommodates strapping guides and also accommodates the use of ram trucks, crane hooks or other carriers to rapidly and easily load a loose coil upon the carrier and to unload a compacted coil from the device.

A further object is to provide a device of this character having a novel, efficient and rugged construction and a novel combination and cooperating relation between coil carrying means, compacting means and strapping means.

Other objects will be apparent from the following specification.

In the drawings:

FIG. 1 is a perspective view of the device with parts aligned in condition to perform a compaction of a coil, and with parts broken away.

FIG. 2 is a fragmentary perspective view of the device illustrating the loading position thereof.

FIG. 3 is a perspective view of a compacted and strapped rod coil.

FIG. 4 is a top plan view of the device illustrating in dotted lines loading and unloading positions thereof.

FIG. 5 is a side elevational view of the device.

FIG. 6 is a sectional view of the device taken on line 6—6 of FIG. 5.

FIG. 7 is a vertical sectional view of the device taken on line 7—7 of FIG. 5.

FIG. 8 is a sectional view illustrating a construction of a strap guide and taken on line 8—8 of FIG. 5.

FIG. 9 is an enlarged fragmentary sectional view taken on line 6—6 of FIG. 5 and illustrating in full lines the coil releasing position and in dotted lines the extended position of the mechanism for regulating the inner diameter of the coil.

FIG. 10 is a longitudinal sectional view taken on line 10—10 of FIG. 9 and illustrating the coil carrier in retracted or coil releasing position.

FIG. 11 is a longitudinal sectional view taken on line 10—10 of FIG. 9 and illustrating the coil carrier in diameter-regulating or extended position.

FIG. 12 is a fragmentary transverse sectional view taken on line 12—12 of FIG. 10.

FIG. 13 is a fragmentary transverse sectional view taken on line 13—13 of FIG. 10.

My improved coil compacting device comprises a coil carrier or horn rotatably mounted upon a frame to swing to and from loading and unloading positions at an angle to the frame and a compacting position aligned with the frame. The coil carrier is of Y-shape in cross section, having one leg of the Y projecting downwardly and adjustable in length between an extended coil diameter-control position and a retracted release position. A compactor shiftable on the frame cooperates with the coil carrier to compact a rod coil on the carrier. The rotatable coil carrier also carries strap guides and cooperates with guides upon the compactor to accommodate banding of the coil in desired compacted dimensions or size by a plurality of metal bands or straps.

Referring to the drawings which illustrate the preferred embodiment of the invention, the numeral **20** designates an elongated rigid frame or base which may be of any suitable construction, and which preferably includes parallel longitudinal ways or tracks **22**.

A coil carrier assembly **24** is mounted at one end of the frame **20** to rotate upon a vertical axis. As here shown, a base plate **26** secured in horizontal position to the top of the frame **20** at the end thereof supports an upright tubular member **28** for rotation about its axis. Suitable bearings (not shown) accommodate rotation of member **28** upon plate **26**. A top plate **30** is secured on the upper end of tubular member **28** and projects forwardly and laterally therefrom. A vertical face plate **32** is secured to the forward or inner end of the top plate **30** and is reinforced by suitable gusset plates **34** secured thereto and to the top plate **30**. Face plate **32** is preferably interrupted by a cut-away **36** at the top center portion thereof, and by a pair of angularly downwardly extending side cut-aways **38**, as best seen in FIGS. **6** and **9**. Uprights **40** are secured to plate **30** and mount a horizontal member **42** which includes a disk or plate **44** upon which a turntable **46** is journaled by any suitable bearing means.

An overhead or elevated structure extends longitudinally of the frame **20** in spaced relation thereabove and horizontally. This overhead structure includes cross members **48** which are secured to the disk or turntable **46**. Spaced parallel horizontal longitudinal rail members **50** are connected to the ends of cross members **48**. The opposite ends of rail members **50** are supported by uprights **52** located at the opposite end of the device, and here shown as supported upon a tank or liquid reservoir **54** carried by base **20** and forming a part of a hydraulic system employed in the device.

An elongated cantilevered coil carrier or horn **56** is carried by and projects horizontally forwardly or inwardly from the face plate **32**. The coil carrier **56** includes an upper rigid horizontal unit of V-section providing a pair of upwardly diverging elongated horizontal arms, flanges or plates **58**. A pair of laterally spaced elongated vertical guide plates **60** depend from the upper arms **58** centrally thereof and extend longitudinally the full length of the arms **58**. Both guide plates **60** have a plurality or set of similar parallel elongated inclined slots **62** formed therein at spaced intervals along the length thereof, and also are provided adjacent their free ends with a vertical slot **64**.

A sizing plate **66** is positioned between and extends lengthwise of guide plates **60**. Sizing plate **66** has a plurality of parallel inclined slots **68** therein complementary to but inclined oppositely relative to the slots **62** in plates **60**. Sizing plate **66** also carries a cross shaft projecting therefrom and mounting rollers **70** positioned in the vertical slots **64** of guide plates **60**. An elongated yoke member **72** having a pair of elongated parallel horizontal yoke arms straddles the guide plates **60**. Yoke member **72** carries a plurality of longitudinally spaced cross shafts which mount rollers **74** adapted to roll in the inclined slots **62** and **68**, as seen in FIGS. **10**, **11** and **13**. Yoke **72** passes freely through an opening in the face plate **32** in a vertical passage thereof (not shown). Yoke **72** is pro-

vided with a yoke head **76** at its outer end, to which is pivotally connected at **78** the ram or piston rod **80** of a double-acting fluid pressure extensible and retractable member or cylinder **82**. The opposite end of member **82** is pivoted at **84** to a bracket **86** secured to the tubular or upright member **28**.

A pair of plates **88** extend lengthwise of the coil carrier **56** below the upper arms or plates **58** thereof, being welded thereto and to the guide plates **60** to extend in laterally downwardly inclined divergent relation from the upper margins of said guide plates **60**. Reinforcing plates **90** extend between the outer margins of the plates **88** and the outer portions of the upper arms or plates **58**, as best seen in FIGS. **6** and **9**. Longitudinal channel-forming members **92** are secured to the under sides of the downwardly divergent plates **88** to provide strap guides. Longitudinal ribs **94** are preferably provided on the upper faces of the V defined by the arms **58** to provide an upper strap guide.

Coil carrier assembly **24** also includes an upper curved strap guide **96** fixedly carried by plate **30** and bent through approximately 180° to preferably terminate at a level adjacent the level of the lower portion of the longitudinal rails **50**. Laterally downwardly inclined plates **98** project below plate **30** rearwardly or outwardly of face plate **32** and are provided with curved track guide surfaces **100** extending substantially 180°. The strap guides may be of any character found suitable, and one embodiment which may be utilized is illustrated in FIG. **8** wherein the curved guide member **96** is provided with a plurality of transverse passages **102** at spaced intervals along its length, each receiving a coil spring **104** which has an enlarged head or member **106** at each end bearing against the outer surface of a side guide plate **108**. Plates **108** are pressed against the sides of guide **96** by the spring. Projecting beyond the curved edge of guide **96** is an inturned marginal portion **110** adapted to releasably retain a metal strap member **112**.

Any suitable means may be employed to swing the coil carrier assembly **24** between the operative position thereof aligned with the frame, as illustrated in full lines in FIG. **4**, and loading and unloading positions thereof, as illustrated in dotted lines in FIG. **4**. As here illustrated, an arm **114** is secured to and projects laterally from the upright tubular member **28** and is pivotally connected to the piston rod **116** of a fluid pressure member whose cylinder **118** is pivotally connected to a bracket **120** secured to the frame **20** spaced from the tubular member **28**.

A compactor assembly **122** is mounted to traverse the frame **20** and is supported upon longitudinal members **124** which journal upper rollers **126** and lower rollers **128** at opposite ends thereof. Rollers **126**, **128** traverse the ways or tracks **22** of the frame. Members **124** support a part **130*c*** of a leading compactor plate and a trailing compactor plate **132** extending vertically and transversely. Plates **130**, **132** are spaced apart and interconnected by longitudinal compactor frame members **134**. The leading compactor plate **130** is formed in three segments, **130*a***, **130*b*** and **130*c***, as best seen in FIG. **7**, which are supported by frame parts **134** in spaced relation to provide gaps located similarly to the side cut-aways **38** of the face plate **32** of the coil carrier. Plate **132** is preferably of a configuration similar to that of plate **32** of the coil carrier assembly and provides means in association with compactor frame members **134** to position the leading compactor plate segments **130*a***, **130*b*** and **130*c***. Each of the leading compactor plate segments **130*a***, **130*b*** and **130*c*** is provided with a notch **136**, which notches are adapted to receive therein with clearance the plates **58** and **66** of the coil carrier arm or horn.

A reinforcing end structure **138** is secured to trailing plate **132** and to longitudinal members **124** and provides means for connection to the compactor assembly **122** of a ram or piston rod **140** of a double-acting fluid-pressure member whose cylinder **142** is suitably anchored to fixed parts of the apparatus, and which is associated with suitable fluid-pressure generating means, such as a motor-pump set **144**, in a fluid-pressure circuit which may also include the reservoir **54**.

Compactor assembly **122** has associated therewith an upper central strap guide **146** and a pair of downwardly laterally inclined strap guides **148** which respectively complement the strap guides **96** and **100** of the coil carrier assembly, and are aligned or registered therewith.

A strapping assembly is mounted on the frame rails **50** to traverse the same. The strapping assembly is provided with a rigid frame, including spaced elongated transverse frame members **152** and spaced longitudinal frame members **154** rigidly secured together. Longitudinal frame members extend alongside the rails **50** and each preferably carries a set of upper and lower rollers **156** at each end thereof. The rollers **156** of each set engage the upper and lower surfaces of the flanges or tracks of the rail member **50** to guide travel of the strapping assembly **150** along the rails. Cross members **158** span and are secured to the rails **50** at the ends thereof adjacent the supports **52** and serve to mount a double-acting fluid-pressure cylinder **160** from which projects a piston rod **162** secured to a transverse frame member **152** of the strapping assembly.

The frame of the strapping assembly includes vertical guides **164** carried by and projecting upwardly from the transverse frame members **152** centrally thereof and equispaced from rails **50** and compactor plate segments **130*a*** and **130*b***. A strapping mechanism **168** is secured to a traveling assembly member **166** which is vertically shiftable on the guides **164**. As here illustrated, the position of the strapping mechanism **168** may be controlled by a double-acting fluid-pressure cylinder-piston unit **170** having one end thereof connected to the traveling assembly member **166** and its opposite end secured to a cross member (not shown) connecting the transverse members **152**.

At each end of the strapping assembly is journaled a transverse rotatable bar **172**. A depending arm structure **174** is carried by each bar **172**, and as here shown is comprised of two downwardly converging rigid arms which are interconnected by a cross member **176** adjacent their upper ends and are connected at their lower ends. A pair of double-acting fluid-pressure cylinder-piston units **178** each have one end thereof pivotally connected to a longitudinal frame member **154** and the opposite end thereof connected to a cross member **176** of a depending arm structure **174**, thus providing means for controlling the pivoted positions of the two depending arm structures **174**. Each depending arm structure **174** mounts a strapping mechanism **180** at its lower end in a position adjacent to a strapping guide **148**.

A device of this character may be designed to compact coils having dimensions of the following order: a maximum weight of 8,000 pounds, a nominal inner diameter of 36 inches, a nominal outer diameter of 56 inches, a maximum uncompacted coil length of 54 inches and a minimum compacted coil length of 9 inches. The compacting and sizing pressures are preferably exerted by hydraulic cylinders which may have a maximum compacting pressure in the order of 70,000 pounds and a maximum radial sizing effort or pressure in the order of 18,000 pounds.

In the construction shown, the compacted coil **182** is retained by three metal straps or bands **112** displaced approximately 120° from one another and each passing through the eye of the coil and thence around the coil. It will be understood that, although the machine illustrated is designed to apply three metal straps to the coil, the construction may be altered to apply two straps or four straps if desired. The compacting and strapping of the coil convert the coil from an inherently weak and unstable unit subject to tangling with itself or with anything it touches to a unit which may be handled, stored, shipped and annealed, as incident to preparation for subsequent processing of the coiled rod, with minimum difficulty.

The operation of the machine is as follows: With the compactor assembly **122** and the strapping assembly **150** retracted to positions clear of the free end of the coil carrier or horn **56** and with the sizing plate **66** of the horn retracted to the posi-

tion shown in FIG. 10 and in full lines in FIG. 9, the coil carrier assembly 24 is swung to an angular position relative to the frame 20 by actuation of the cylinder 118, for example, to the position illustrated in FIG. 2. The horn 56 is preferably swung to a position extending from 45° to 90° relative to the frame 20, so that the free end thereof will be clear of the frame 20. Thus means for loading a loose coil 182*a* may approach the machine to a loading position. As illustrated in FIG. 2, the loading means may comprise a lift truck 184 having a ram 186 projecting forwardly therefrom and providing means to suspend the loose coil 182*a* for transport to the machine. The Y-shaped cross section of the coil carrier or horn 56 readily accommodates the ram 186 of the truck in the space above and between the upper arms 58 of the coil carrier while the loose coil 182*a* is advanced to a position encircling the coil carrier. When the coil 182*a* encircles the carrier, the ram 186 may be lowered to transfer support of the coil to the coil carrier 56, whereupon the coil loading means can be withdrawn to a position clear of the device.

After the loose coil 182*a* is loaded upon the coil carrier 56 of the device, the coil carrier assembly 24 is swung by operation of fluid-pressure unit 118 to a position in which carrier 56 is parallel to the frame 20 and aligned and registering with the notches 136 in the compactor unit 122. After this alignment is effected, the fluid-pressure cylinder 142 is activated to move the compactor assembly 122 toward and into interfitting relation with the coil carrier 56, so that the ends of the loose coil 182*a* are engaged by face plate 32 and the leading compactor plate segments 130*a*, 130*b* and 130*c*. When a predetermined amount of pressure has been applied to the coil, the fluid-pressure member 82 is activated to extend downwardly the sizing plate 66 of the coil carrier, as to the position illustrated in FIG. 11. With the downward extension of the sizing plate 66, the maintenance of a minimum desired diameter of the coil is assured, inasmuch as the interior opening or eye of the coil 182 will then be engaged at substantially equispaced points by the free edges of the upper arms 58 of the carrier and the bottom edge of the sizing plate 66. The application of compacting pressure by the compactor assembly 122 activated by the fluid-pressure member 142 continues until the desired pressure has been applied and the desired compaction effected.

As the compactor is advanced, the strapping assembly 150 preferably is advanced along rails 50 toward the coil by fluid-pressure member 160, preferably at a faster rate than the compactor advances, and the strapping mechanisms 168 and 180 are actuated. It will be observed that, since the strap guides 146 and 148 advance with the compactor assembly 122, they assume operative positions relative to the strap guides 96 and 100 of the coil carrier assembly as compacting of the coil occurs. Thus the strap guides form guide paths for metal strapping fed by the strapping mechanisms 168 and 180. The respective guide paths include the channels 92 at the sides of the coil carrier and the channel defined between guides 96 at the central top portion of the coil carrier. Actuation of the strapping mechanisms 168 and 180 can occur simultaneously in the manner well understood in the art, and entails feeding of a strap 112 from each strapping mechanism to pass through the eye of the coil 182 and exteriorly around the coil, followed by tensioning of the strap, sealing thereof, cutting of the strap outwardly of the sealed part thereof and release. The operations of tensioning, sealing, cutting and releasing entail substantially radial movement of the strapping mechanisms 168 and 180 relative to the coil which is accommodated in the mechanism illustrated by vertical movement of the upper strapping mechanism 168 by means of the fluid-pressure member 170 and swinging of the arms 174 mounting the strap mechanisms 180 relative to parts 172 achieved by the fluid-pressure members 178. After the strapping operation has been completed and the strapping mechanisms 168 and 180 have been moved outwardly clear of the compacted strapped coil 182, the strapping assembly 150 may be retracted from carrier assembly 24 by actuation of the fluid-pressure member 160. Also, the compacting assembly 122 is withdrawn or retracted to the FIG. 5 position by actuation of the fluid-pressure member 142. Thereupon, the coil carrier assembly 24 and the coil carrier 56 may be swung to an unloading position as illustrated in dotted lines in FIG. 4 preparatory to repetition of the operation.

The device may be provided with suitable control means (not shown) for sequencing the operation of the device to achieve a rapid operating cycle. Also, safety mechanisms may be incorporated in the control means, for example, mechanisms to prevent swinging of the coil carrier assembly 24 during loading thereof and until the loading means 184 has moved clear of the apparatus. Also, the fluid-pressure systems may be so correlated with the control system as to permit the motor and pump of the device to run at no load while the hydraulic system is fully pressurized, as during the time that the straps are being advanced, tensioned and sealed. It will also be understood that automatic cycling is not essential, and that the device may be operated by manual controls in the desired sequence.

While the preferred embodiment of the invention has been illustrated and described, it will be understood that changes in the construction may be made within the scope of the appended claims without departing from the spirit of the invention.

What I claim is:

1. A rod coil press comprising an elongated frame, a coil carrier assembly mounted at one end of the frame to swing laterally, said carrier assembly including a horizontal carrier arm projecting from a vertical face plate and mounting multiple strap tracks, a compactor assembly traversing said frame and including a vertical multiple-part compactor plate confronting said face plate, said compactor assembly having a passage accommodating interfitting relation of said carrier arm therein as said compactor assembly moves to compact a coil on said arm between said compactor plate and said face plate, multiple strap tracks carried by said compactor each complementing a strap track on said carrier assembly, means for advancing and retracting said compactor assembly, and means for swinging said coil carrier assembly.

2. A rod coil press as defined in claim 1, wherein said carrier arm is of Y-shape in cross section and said compactor plate has notches communicating with said passage and receiving marginal parts of said Y-shaped carrier arms.

3. A rod coil press as defined in claim 2, and means for extending and retracting transversely a part of said carrier arm to increase and decrease the cross sectional dimension of said arm.

4. A rod coil press as defined in claim 3, wherein at least one strap guide is carried by a fixed part of said carrier and adjacent to the extensible part of the carrier.

5. A rod coil press as defined in claim 1, wherein said carrier arm mounts a plurality of longitudinal members defining spaced longitudinal parts of said first strap tracks.

6. A rod coil press as defined in claim 5, wherein spaced curved strap guides mounted on said coil carrier assembly constitute a part of each of said first strap tracks.

7. A rod coil press as defined in claim 1, wherein each strap track of said coil carrier assembly and of said compactor assembly includes a curved portion, and strapping means for advancing a strap through each pair of complementary strap tracks to pass trough the eye of a coil and thence around the coil to define a loop encircling a part of the coil and positioned in a plane substantially radial of said coil.

8. A rod coil press as defined in claim 7, wherein said strapping means are carried by and shiftable longitudinally on said frame.

9. A rod coil press as defined in claim 7, wherein said strapping means includes a carriage shiftable longitudinally on said frame and a plurality of strapping mechanisms carried by said carriage and shiftable transversely of said frame.

10. A rod coil press as defined in claim 7, wherein a strapping assembly shiftable on said frame mounts said strapping means, and means independent of said compactor advancing means for shifting said strapping assembly.

11. A rod coil press as defined in claim 7, wherein said carrier arm has divergent plates defining a structure of Y-shape in cross section, said compactor assembly has longitudinal openings therein providing lateral access to portions of said arm between said divergent arm plates which are received in the compactor assembly, and a strapping assembly longitudinally shiftable on said frame mounts said strapping means, each strapping means being located adjacent a longitudinal opening of said compactor assembly.

12. A rod coil press as defined in claim 7, wherein a strapping assembly mounts said strapping means and includes a carriage traversing said frame and a plurality of spaced strapping means shiftably mounted on said carriage for substantially radial movement relative to the axis of the coil on the carrier arm when positioned adjacent to said coil.

13. A rod coil press as defined in claim 1, and means for expanding said carrier arm to control the inner diameter of a coil as it is compacted while mounted on said arm.

14. A rod coil press as defined in claim 1, wherein said carrier arm comprises three elongated plates positioned in centrally converging planes, and means movably mounting one of said plates transversely in its plane.

15. A rod coil press as defined in claim 1, wherein said carrier arm comprises an elongated plate of V-shape in cross section with its opposite parts extending divergently upwardly from the central part thereof, guide means projecting downwardly from said central part, a sizing plate shiftable vertically on said guide means, and means for shifting said sizing plate.

16. A rod coil press as defined in claim 15, and a vertical pin and slot connection between said guide means and sizing plate.

17. A rod coil press as defined in claim 15, wherein said guide means has a plurality of spaced parallel inclined slots therein and said sizing plate has a plurality of spaced parallel slots therein inclined oppositely to the inclination of the slots in said guide means, said sizing plate shifting means including a member shiftable longitudinally of said carrier arm and carrying spaced members seated in the slots of both of said guide means and sizing plate.

18. A rod coil press as defined in claim 1, wherein said compactor assembly includes a wheeled carriage traversing said frame, a second vertical plate mounted on said carriage, and a plurality of spaced longitudinal frame members carried by said second vertical plate and each mounting a part of said compactor plate.

19. A rod coil press as defined in claim 18, wherein said second vertical plate has a plurality of radial cut-outs therein located between said longitudinal frame members, and said second strap tracks each include a curved strap guide member carried by said compactor assembly and projecting outwardly of a cut-out of said second plate.

* * * * *