(No Model.) 3 Sheets—Sheet 1.

J. BERG.

FIRE ESCAPE.

No. 456,132. Patented July 21, 1891.

Fig. 1.

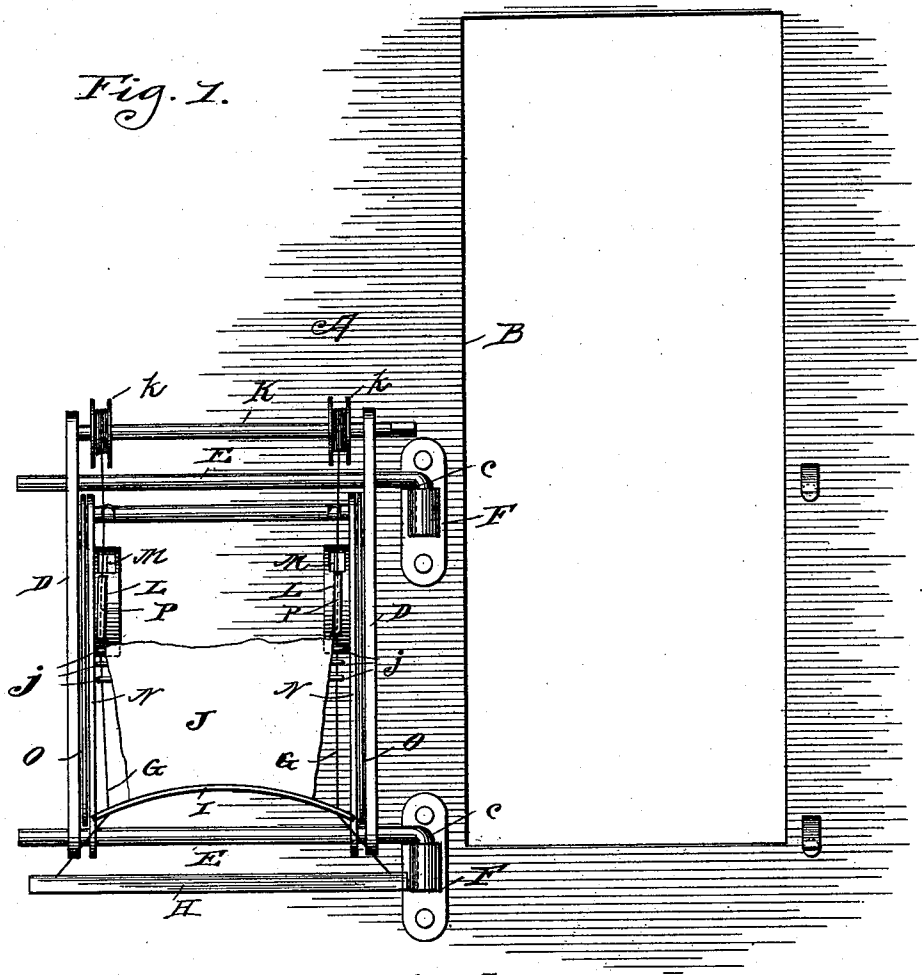

Fig. 4.

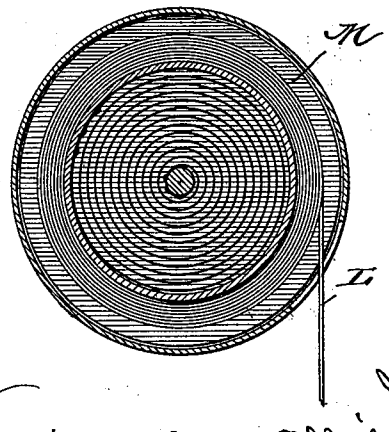

Witnesses,
F. D. Mann,
Frederick F. Goodwin

Inventor,
John Berg
By Offield Towle & Graves,
Att'ys.

THE NORRIS PETERS CO., PHOTO-LITHO., WASHINGTON, D. C.

(No Model.) 3 Sheets—Sheet 2.

J. BERG.

FIRE ESCAPE.

No. 456,132. Patented July 21, 1891.

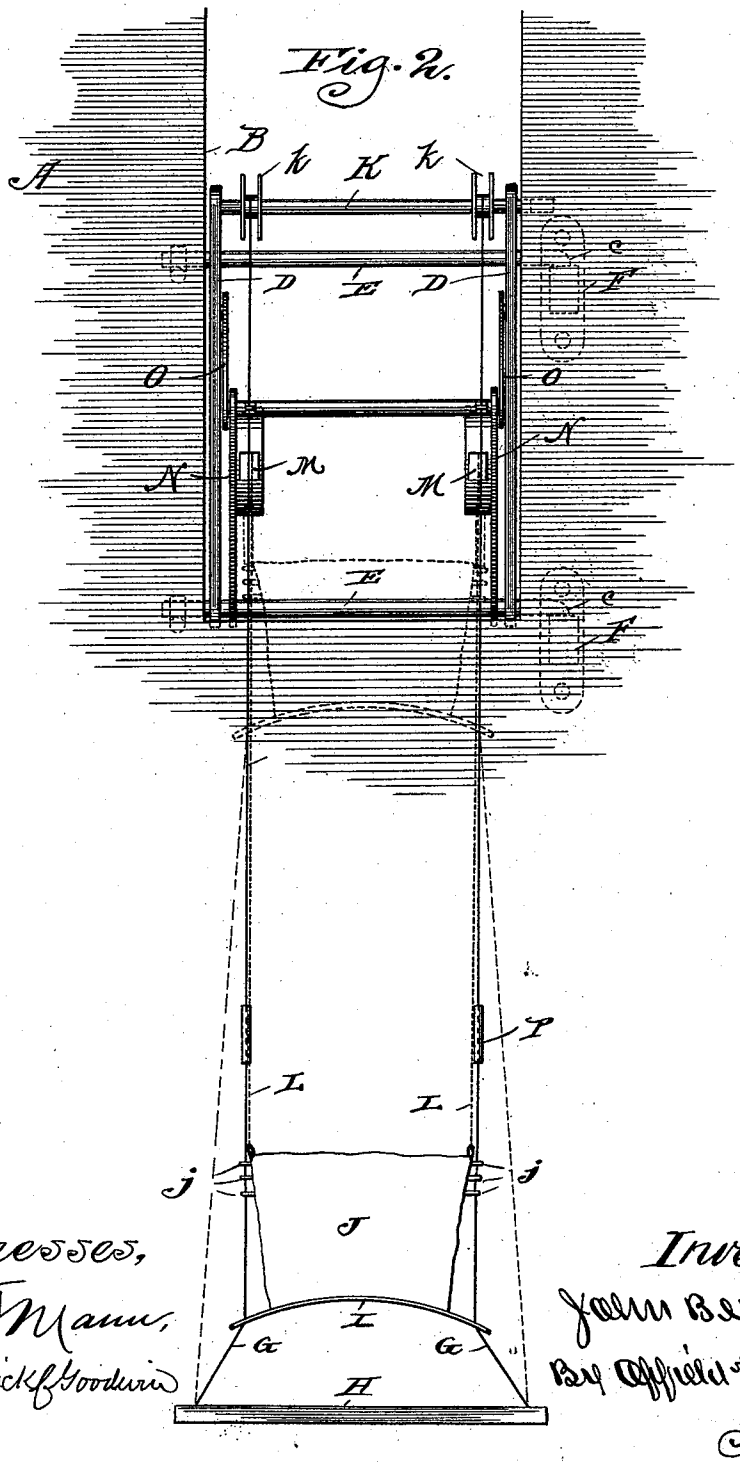

Witnesses,
S. T. Mann,
Frederick C. Goodwin

Inventor,
John Berg
By Offield and Smith,
Att'ys,

THE NORRIS PETERS CO., PHOTO-LITHO., WASHINGTON, D. C.

(No Model.) 3 Sheets—Sheet 3.

J. BERG.

FIRE ESCAPE.

No. 456,132. Patented July 21, 1891.

Fig. 3.

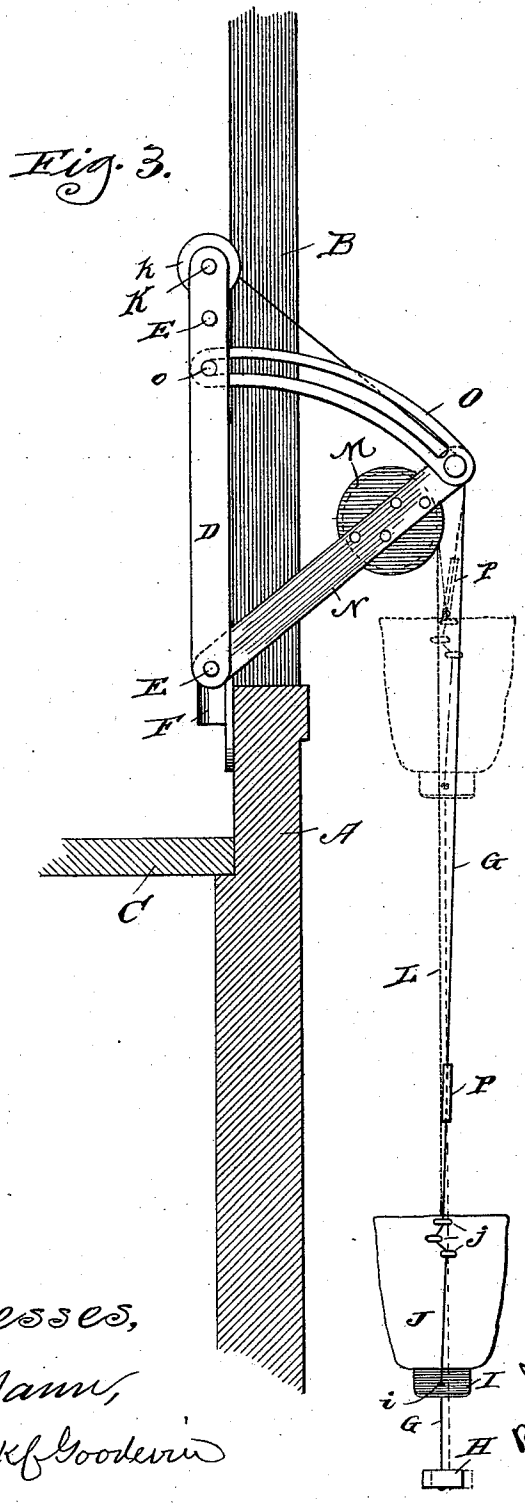

Witnesses,
D. D. Mann,
Frederick P. Goodwin

Inventor,
John Berg
By Offield Towle & Graves,
Att'ys.

THE NORRIS PETERS CO., PHOTO-LITHO., WASHINGTON, D. C.

UNITED STATES PATENT OFFICE.

JOHN BERG, OF MORGAN PARK, ILLINOIS.

FIRE-ESCAPE.

SPECIFICATION forming part of Letters Patent No. 456,132, dated July 21, 1891.

Application filed November 10, 1890. Serial No. 370,844. (No model.)

To all whom it may concern:

Be it known that I, JOHN BERG, a citizen of the United States, residing at Morgan Park, in the county of Cook and State of Illinois, have invented certain new and useful Improvements in Fire-Escapes, of which the following is a specification.

The object of my invention is to provide an apparatus to be used as a means of rapid descent from the upper stories of buildings in case of fire or other causes.

Heretofore the means of escape from buildings in case of fire have been extremely perilous to persons forced to resort to their use. I have designed an apparatus which may be quickly adjusted to an open window when its use is necessary, having a car that is automatically returned to its starting-point, thus making it possible for a number of persons to descend from the same story of a building by the same means in a very short space of time.

In the drawings which form a part of the specification, Figure 1 represents an interior elevation of a wall, showing my improved apparatus applied thereto and a window-aperture in the wall. Fig. 2 represents an exterior elevation of a wall, showing a window-aperture and the relative position thereto of my improved apparatus. Fig. 3 is a vertical sectional view taken through a wall, showing my improved apparatus in side elevation. Fig. 4 is a sectional detail of a spring-roller.

With reference to the drawings, A represents the wall, B the window-aperture, and C the floor.

The main frame of the apparatus is formed by the vertical strips D and the horizontal rods E, whose bent ends *c* are seated in keepers F, said keepers being secured to the interior side of the wall. The guiding-cables G carry a bar H at their lower ends and pass upwardly through apertures *i* in the bow-shaped bottom I of car or basket J, thence through the eyes *j*, having their upper ends secured to sheaves *k* on a rotatable shaft K, journaled in strips D. Secured to the car or basket J are cables L, whose upper ends are secured to spring-controlled rollers or sheaves M, said rollers or sheaves being rotatably mounted upon hinged strips N, whose upper ends are pivotally secured to slotted guides O, which guides are adjustably secured to strips D by studs *o*. Clamps P surround cables G, and may be made of rubber or any other suitable material. The object of these clamps is to provide means whereby a person may grip the guiding-cables without injury to the hands, and also to afford means whereby to check the speed of the descending car. The car having descended and being relieved of its burden, will return to the upward limit of its travel upon the guiding-cables through the action of the spring-controlled rollers or sheaves M.

In construction non-combustible material will be used, the frame parts being made preferably of iron. The cables may be either wire or chains, and the car may be made of wire fabric. I do not limit myself to the exact form of construction shown in the drawings, as changes may be made without departing from the spirit of my invention.

I claim—

1. An apparatus to be used as a means of descent from the upper stories of buildings, said apparatus consisting of a frame hinged to the interior side of a wall, said frame adapted to be swung upon its hinges, whereby to cause the apparatus to be brought before an aperture in the wall, a car suspended by cables from spring-controlled rollers, which rollers are rotatably secured in an adjustable part of said frame, and cables whereby the car is guided in the downward and upward course of its travel, substantially as described.

2. An apparatus to be used as a means of descent from the upper stories of buildings, said apparatus comprising a suitable swinging frame having a rotatable shaft journaled therein, said shaft bearing sheaves or drums upon which guiding-cables are secured, said cables having their opposite ends secured to a bar, and a car having a flexible bottom adapted to impinge the cables in its descent, substantially as described.

3. An apparatus to be used as a means of descent from the upper stories of buildings, said apparatus having, in combination with a hinged frame, a car suspended by cables from spring-controlled rollers, cables whereby the car is guided in its downward and upward travel, and clamps whereby to grip the guiding-cables, substantially as described.

JOHN BERG.

Witnesses:
FREDERICK C. GOODWIN,
N. M. BOND.