US 20080153593A1

(19) **United States**

(12) **Patent Application Publication**

(10) **Pub. No.: US 2008/0153593 A1**

(43) **Pub. Date: Jun. 26, 2008**

Ikeda et al.

(54) **GAME OPERATING DEVICE**

(75) Inventors: **Akio Ikeda**, Kyoto-shi (JP); **Ryoji Kuroda**, Kyoto-shi (JP); **Masahiro Urata**, Kyoto-shi (JP)

Correspondence Address:
NIXON & VANDERHYE, PC
901 NORTH GLEBE ROAD, 11TH FLOOR
ARLINGTON, VA 22203

(73) Assignee: **NINTENDO CO., LTD.**, Kyoto-shi (JP)

(21) Appl. No.: **12/039,151**

(22) Filed: **Feb. 28, 2008**

Related U.S. Application Data

(63) Continuation of application No. 11/446,188, filed on Jun. 5, 2006.

(30) **Foreign Application Priority Data**

Aug. 22, 2005 (JP) 2005-239984

Publication Classification

(51) **Int. Cl.**
A63F 9/24 (2006.01)

(52) **U.S. Cl.** **463/37**

(57) **ABSTRACT**

A game operating device (controller) includes a longitudinal housing, and a holding portion held by hand to be wrapped by its palm it is formed in the housing. A direction switch is provided on an upper surface at a position where it can be operated by thumb of the hand holding the holding portion, and a start switch and a select switch are provided backward thereof. An X button **46** and a Y button are further arranged in line on the upper surface of the housing. An imaging information arithmetic unit is provided at a front end of the housing in a longitudinal direction in such a manner that an imaging device thereof is exposed from a front-end surface. A concave portion is formed on a lower surface at a position corresponding to the direction switch. The concave portion includes a valley and two inclined surfaces. An A button capable of being operated by index finger of the hand holding the holding portion is provided on the backward inclined surface. By processing an image signal obtained by imaging an infrared ray from LED modules by the imaging device, it is possible to obtain an operation signal varying according to a position and/or attitude of the controller.

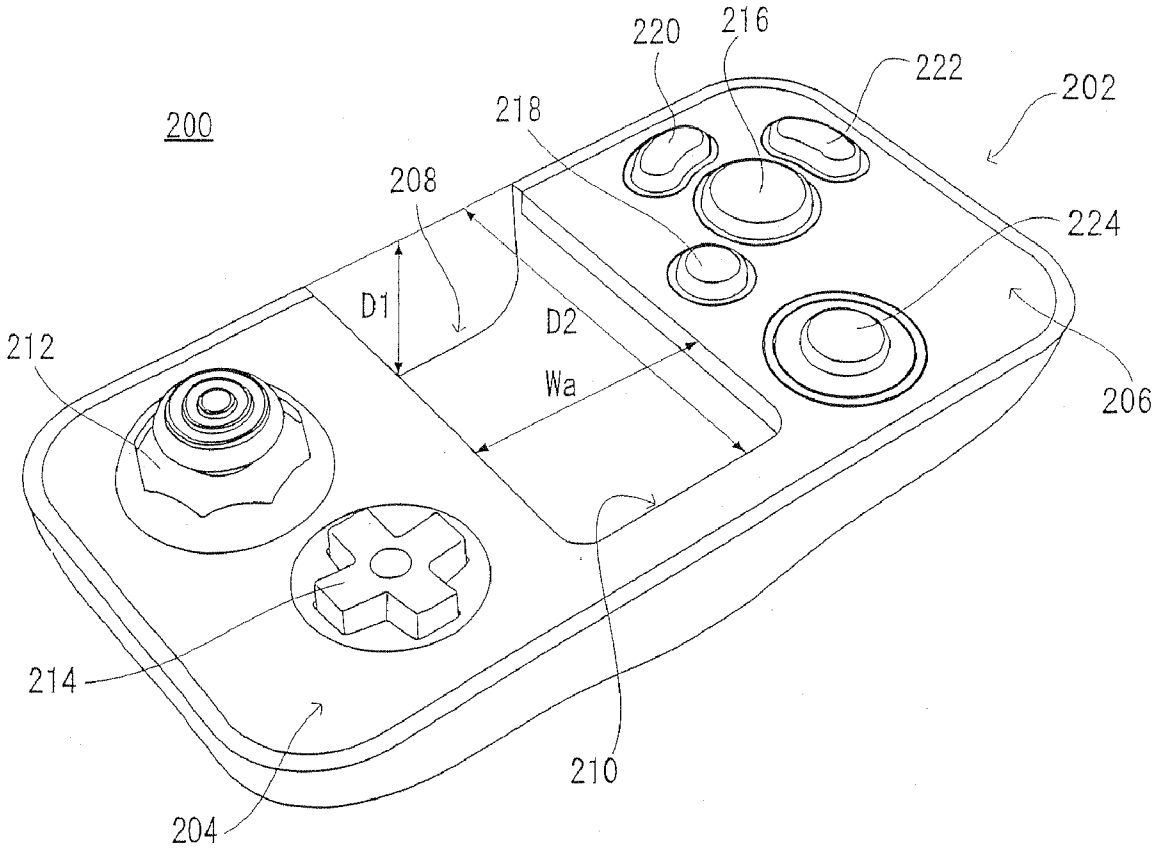

FIG. 1

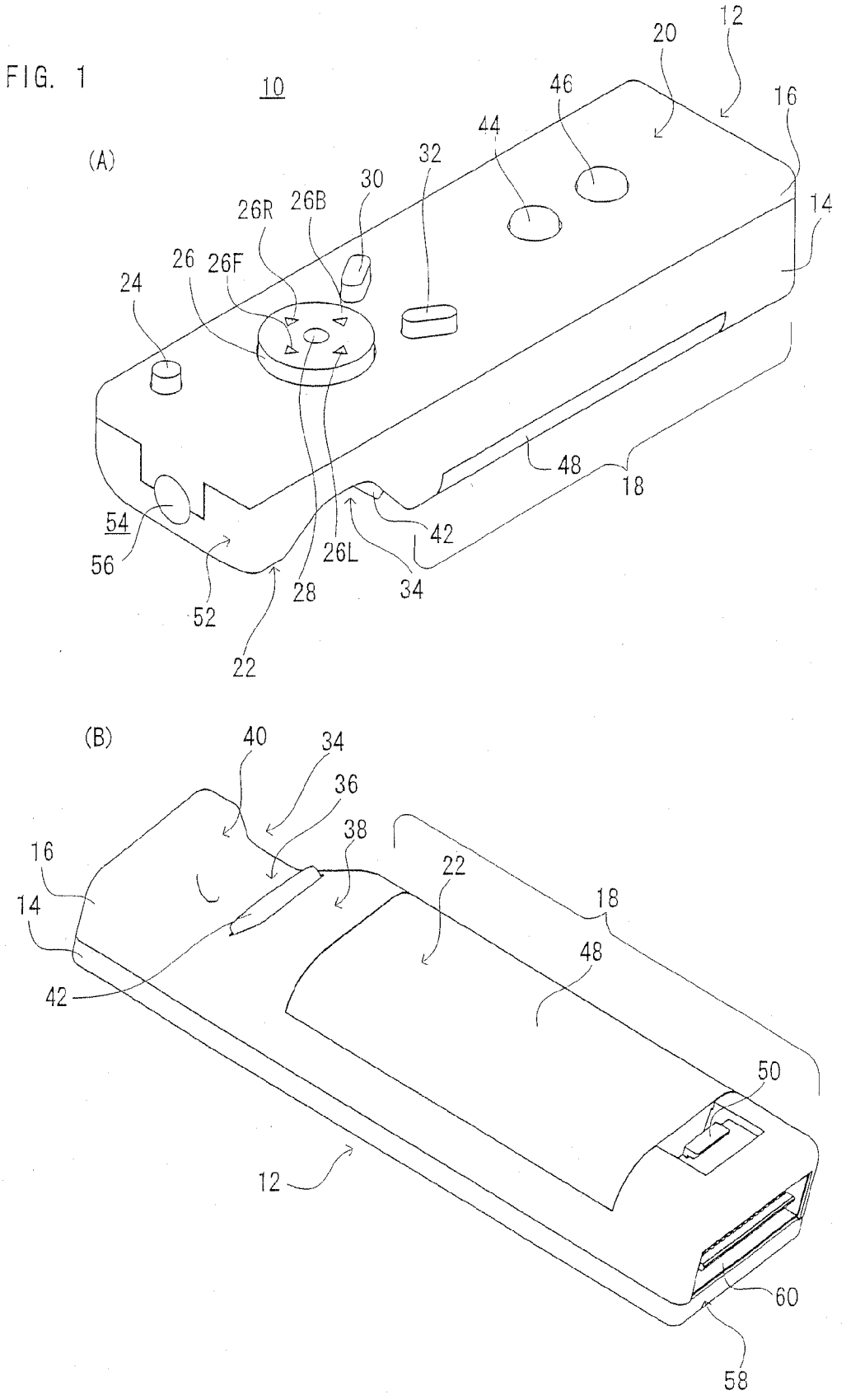
10
(A)
12
20
46
16
44
32
30
26R
26B
14
26
26F
24
48
18
54
42
56
26L
28
34
52
22
(B)
40
34
36
38
16
22
18
14
48
42
50
12
60
58

FIG. 2

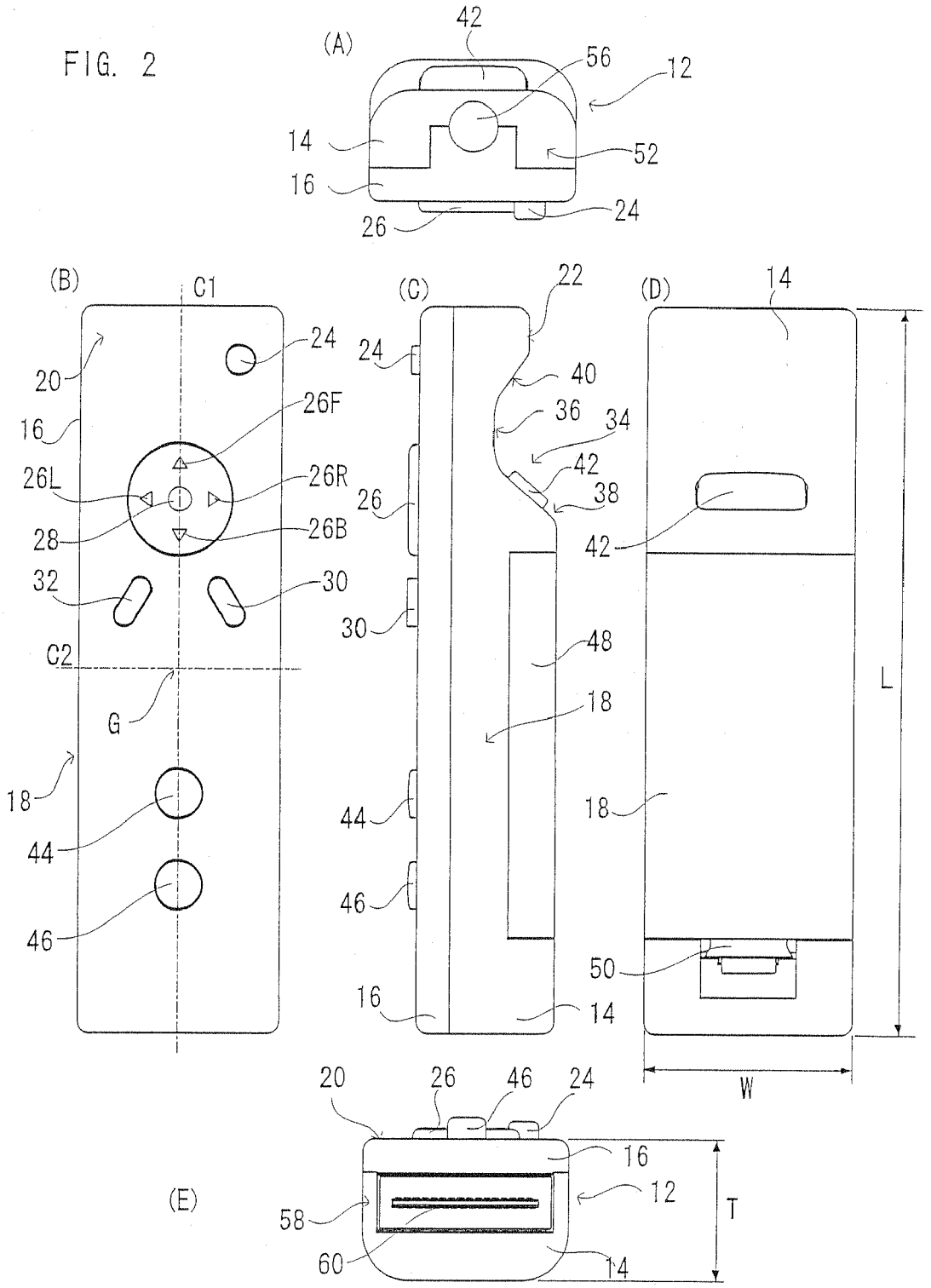
(A)
42
56
12
14
52
16
24
26
(B)
C1
24
20
26F
16
26L
26R
28
26B
32
30
C2
G
18
44
46
(C)
22
24
40
36
34
42
38
26
30
48
18
44
46
16
14
(D)
14
42
18
50
L
W
(E)
20
26
46
24
16
12
58
60
14
T

FIG. 3

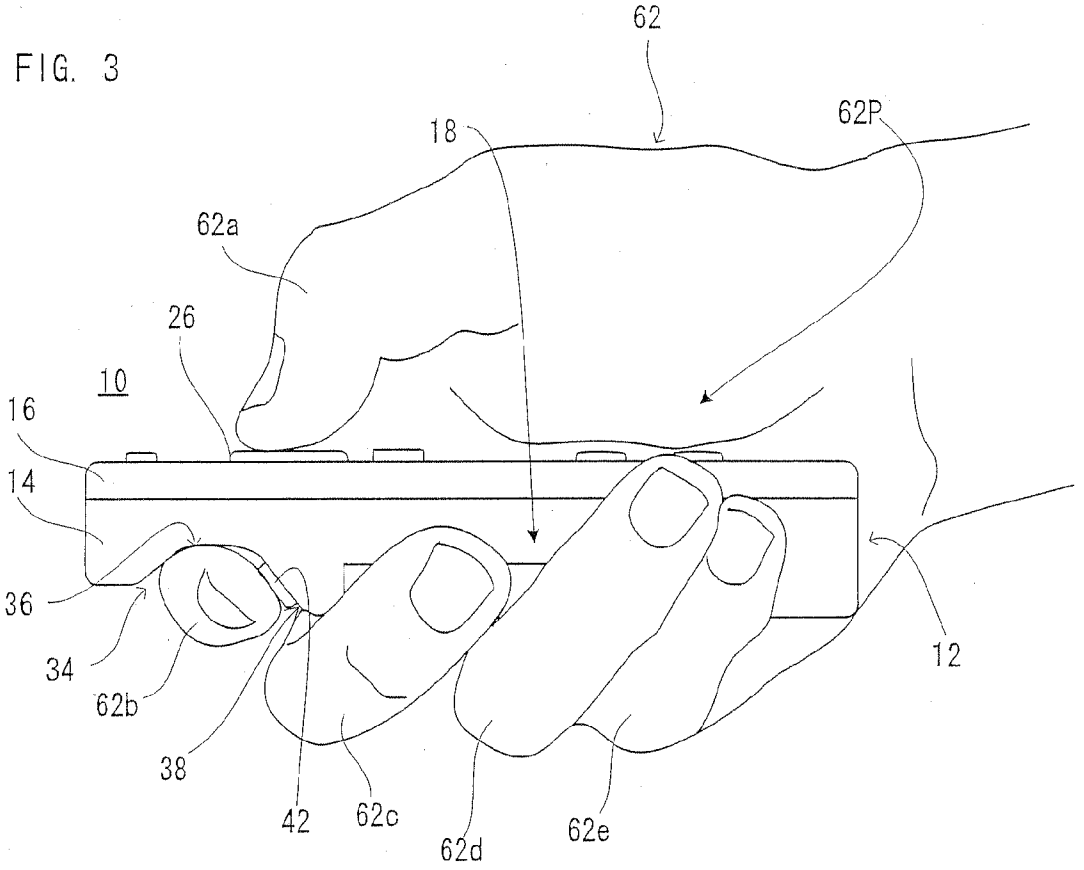

FIG. 4

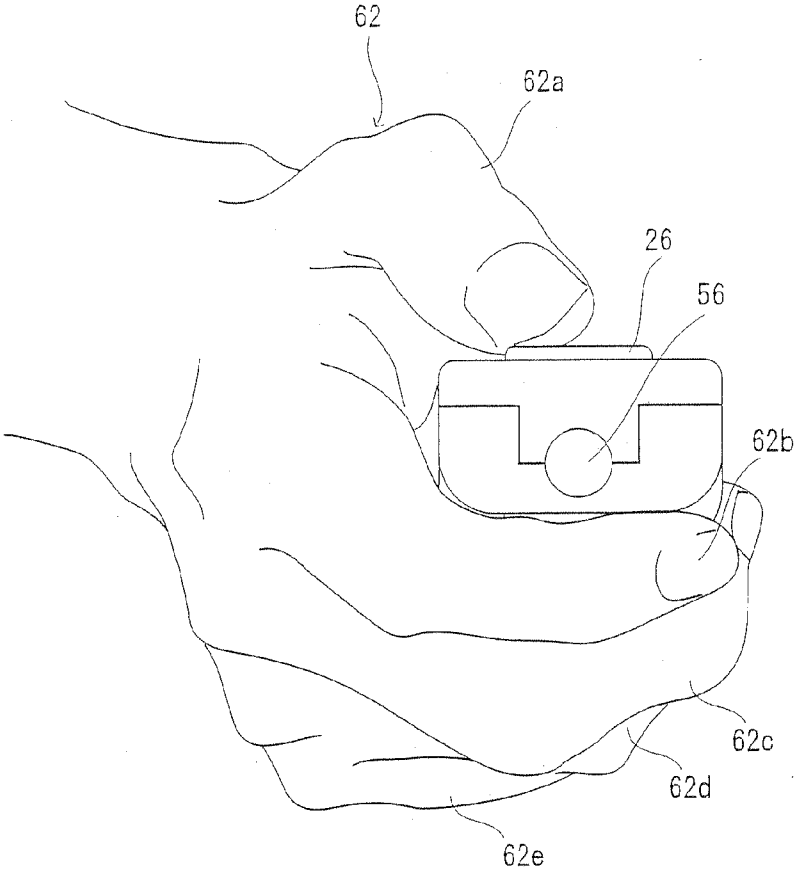

FIG. 5

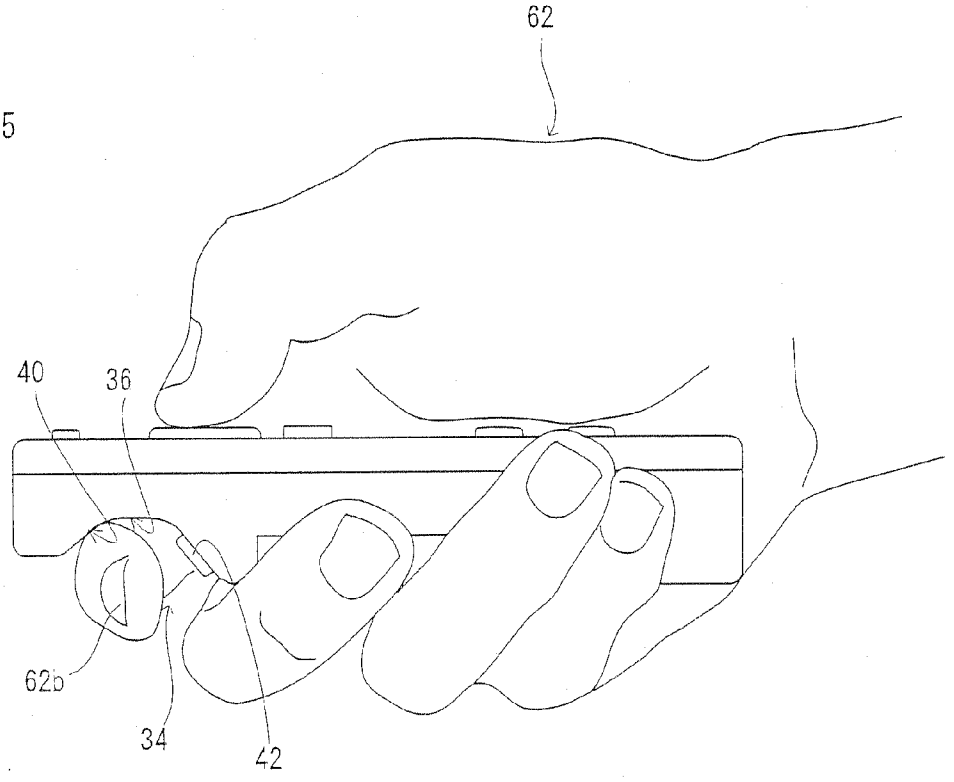

FIG. 6

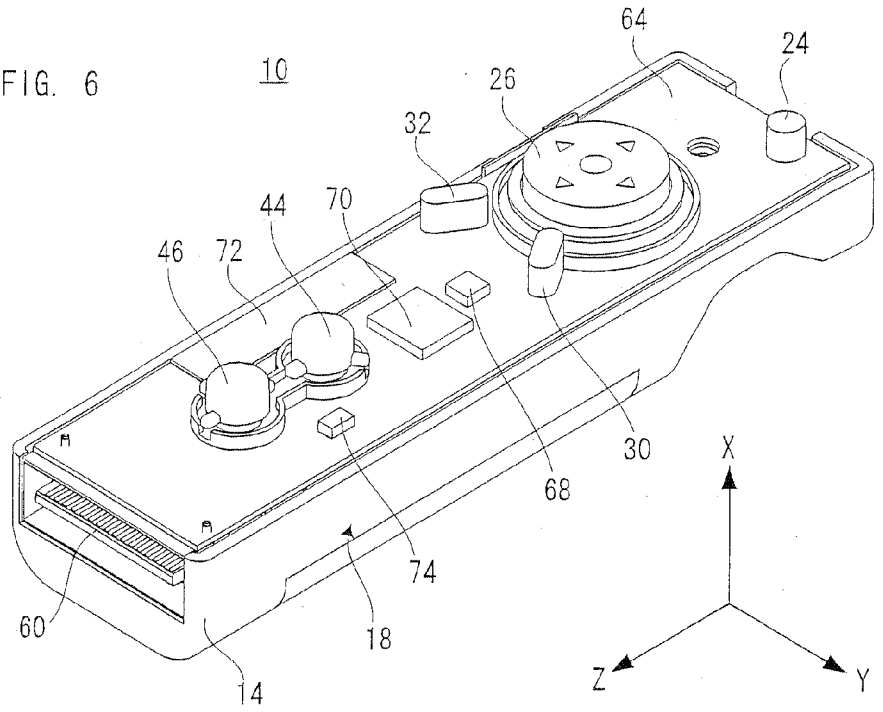
10
64
24
26
32
44
70
46
72
30
68
74
60
18
14
X
Z
Y

FIG. 7

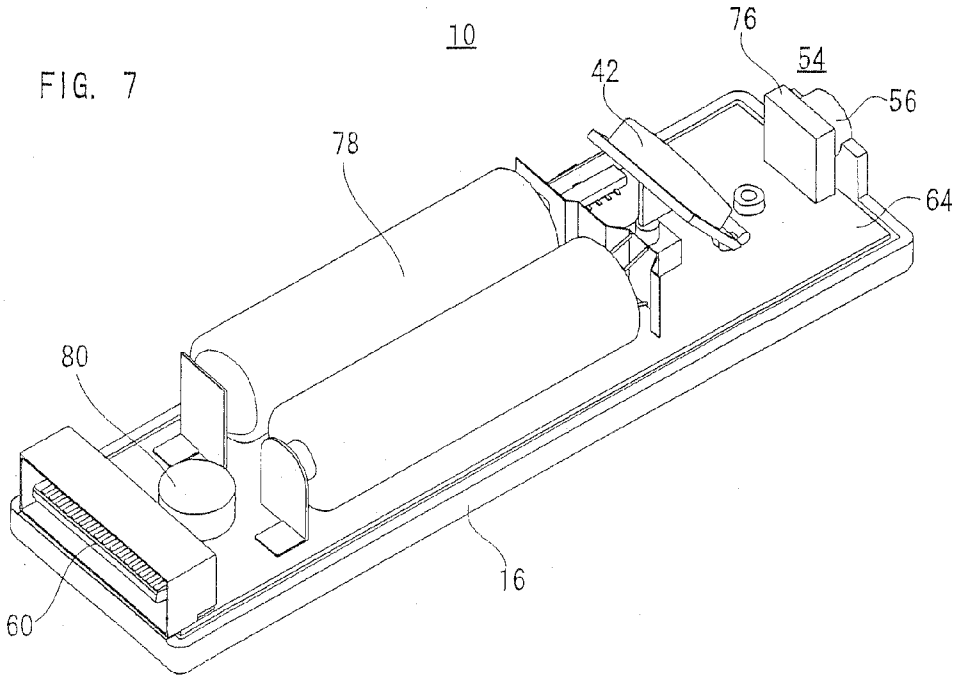
10
76
54
42
56
78
64
80
60
16

FIG. 8

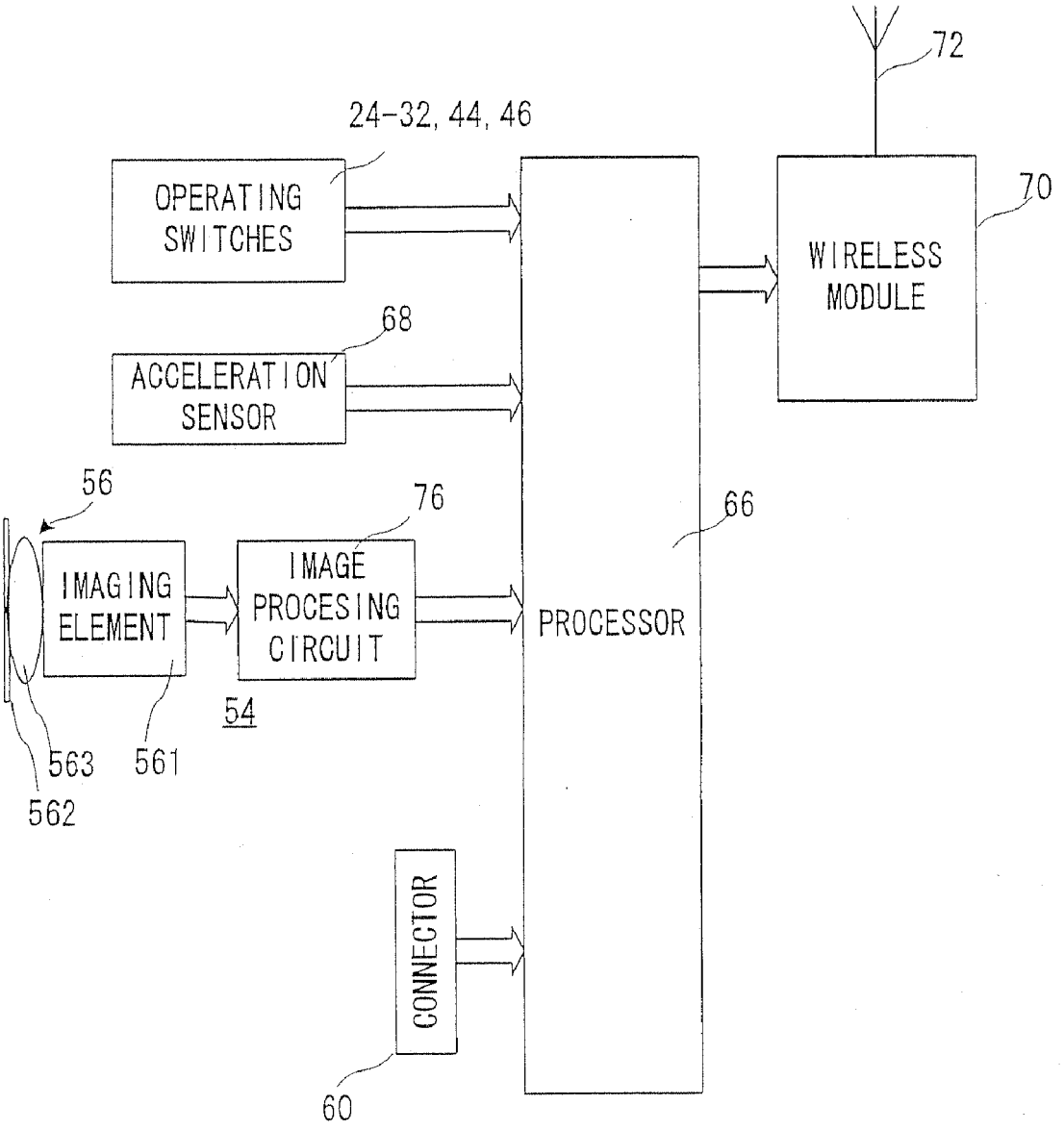
72
24-32, 44, 46
OPERATING SWITCHES
70
WIRELESS MODULE
68
ACCELERATION SENSOR
56
76
66
IMAGING ELEMENT
IMAGE PROCESING CIRCUIT
PROCESSOR
54
563
561
562
CONNECTOR
60

FIG. 9

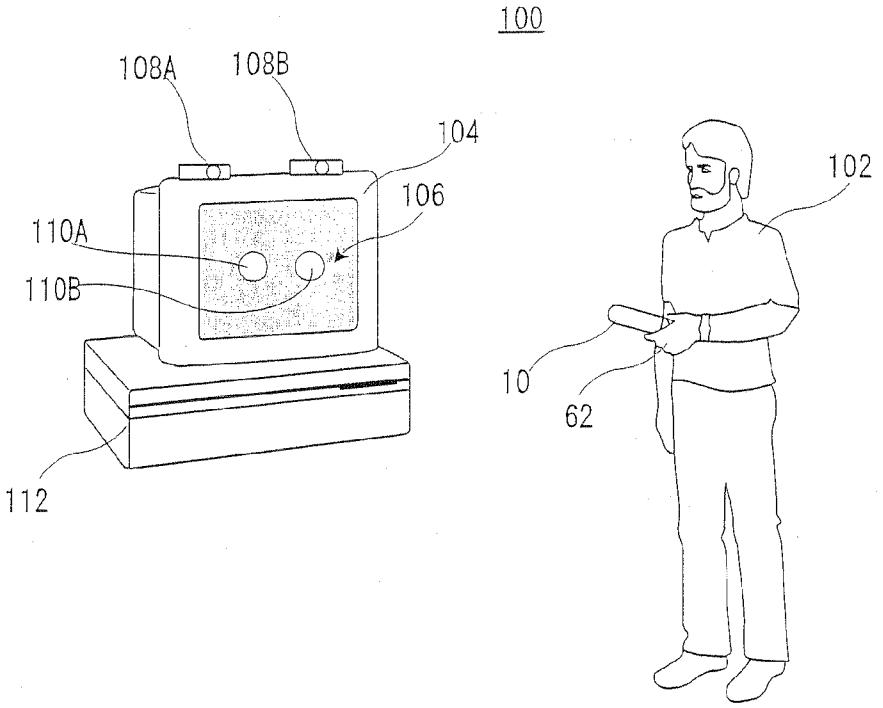

FIG. 10

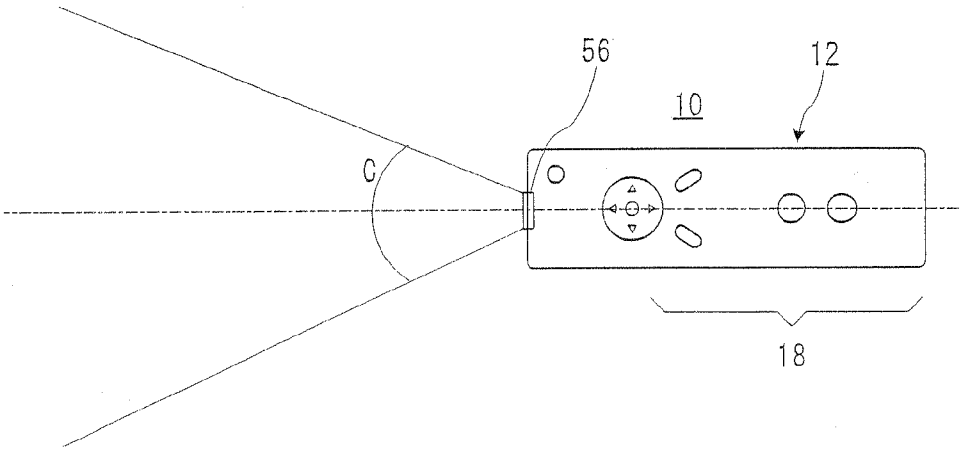

FIG. 11

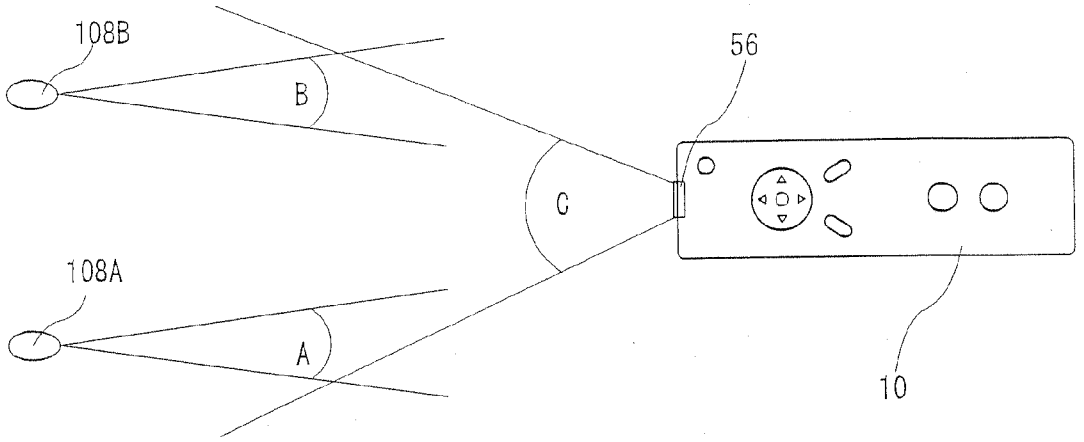

FIG. 12

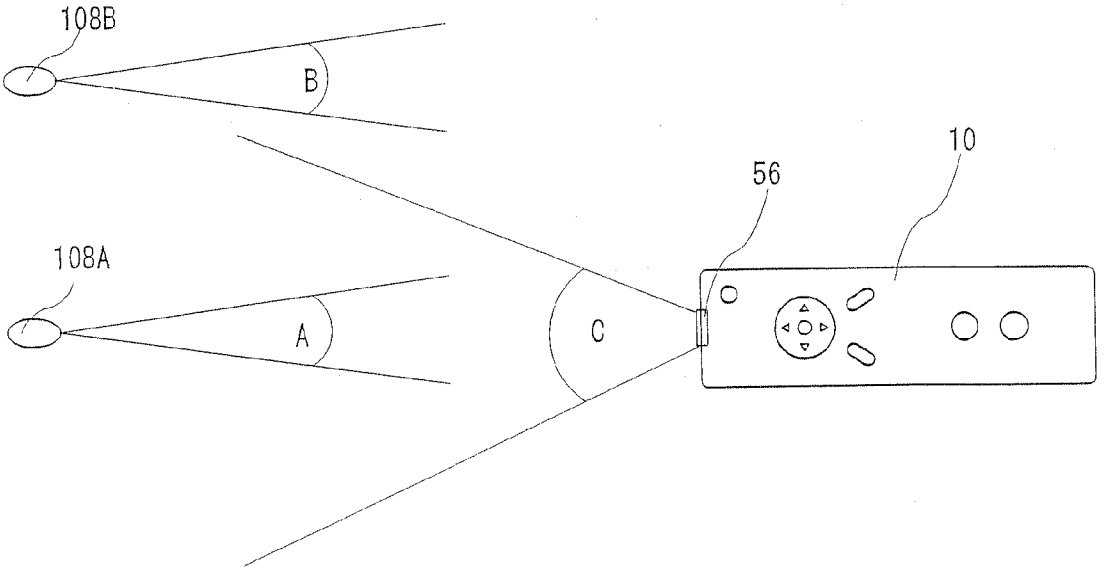

FIG. 13

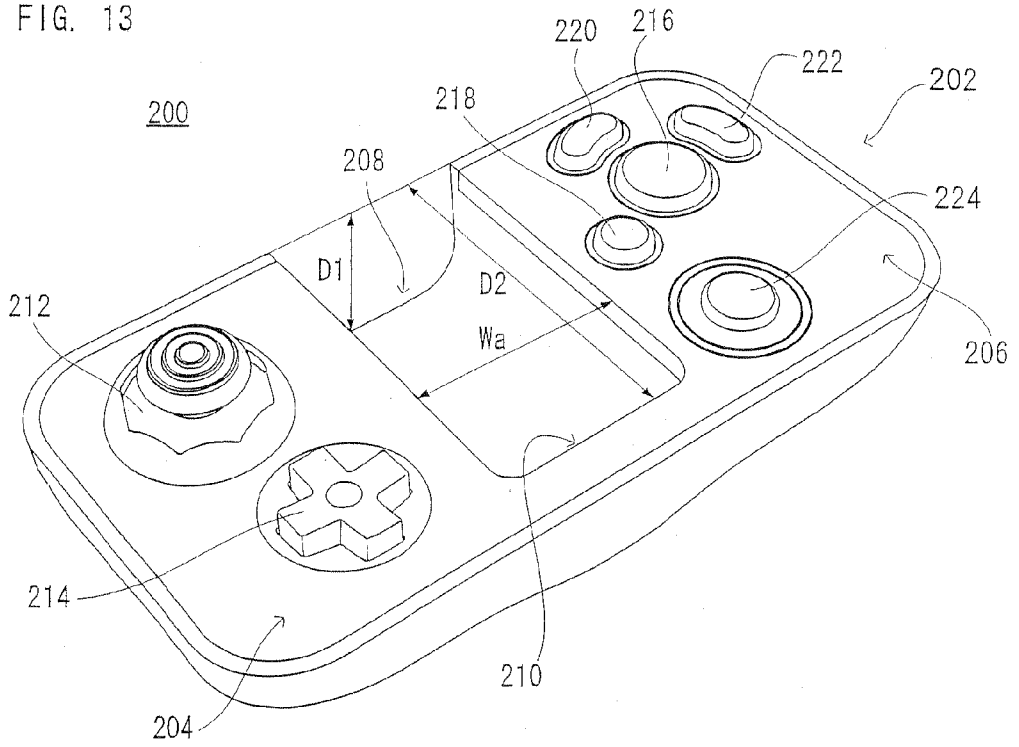
200
220
216
222
202
218
208
224
D1
D2
Wa
212
206
214
210
204

FIG. 14

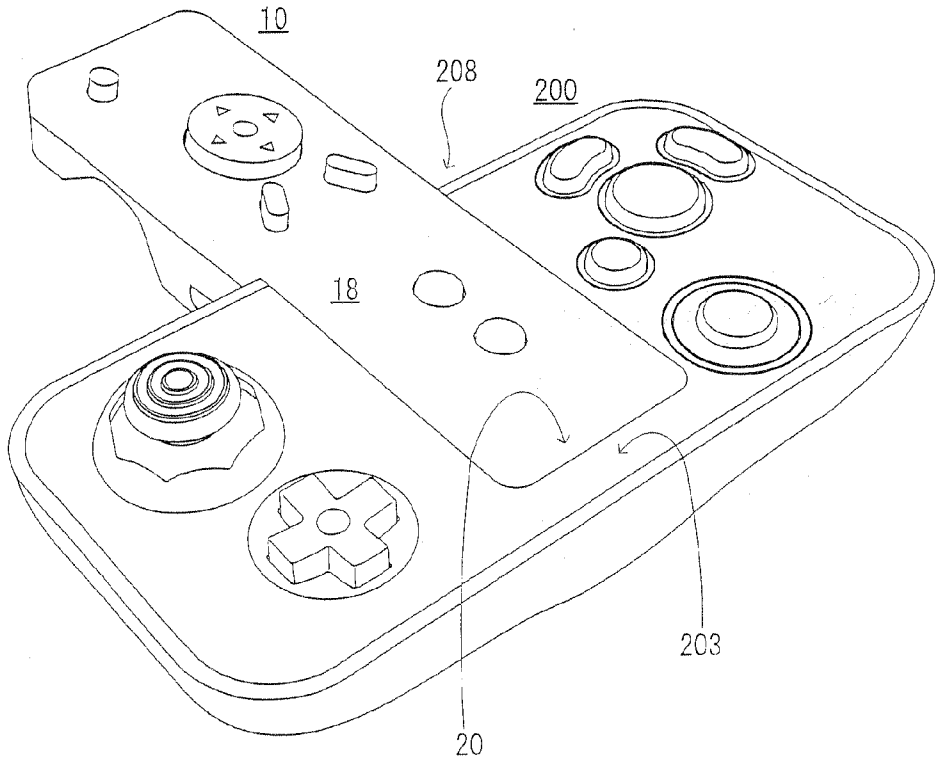
10
208
200
18
203
20

FIG. 15

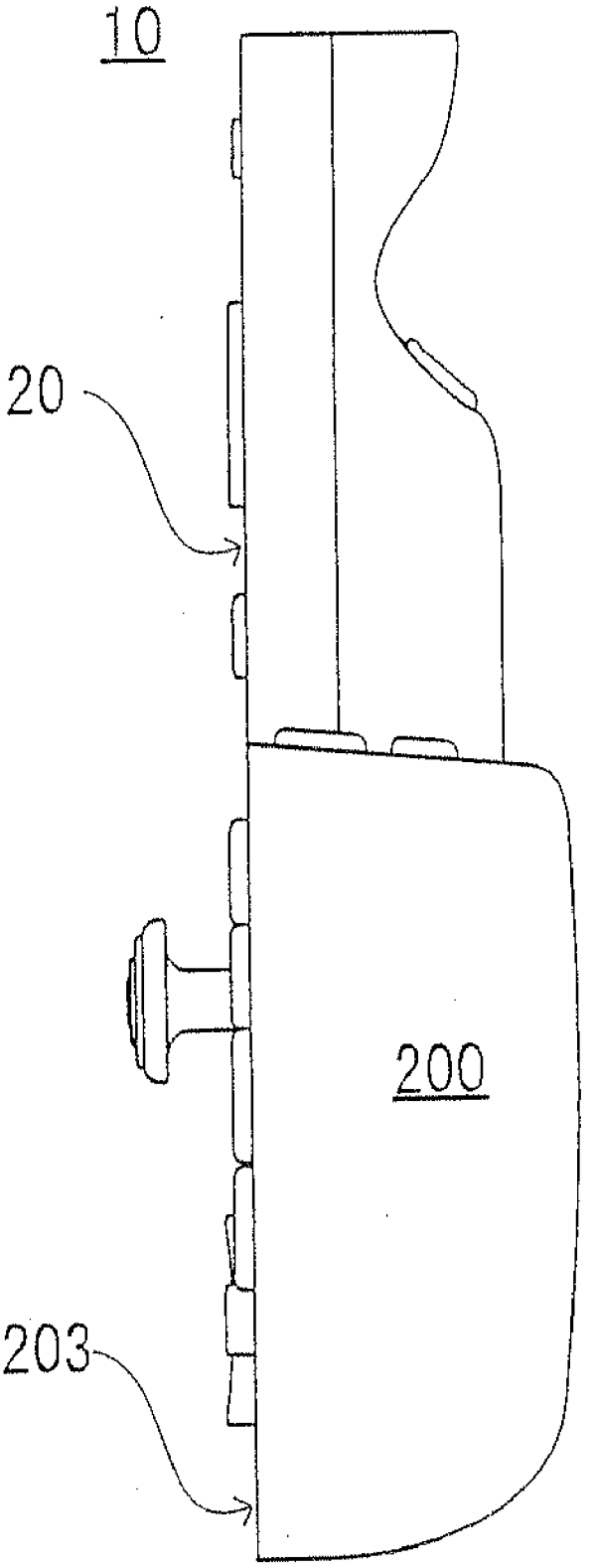

FIG. 16

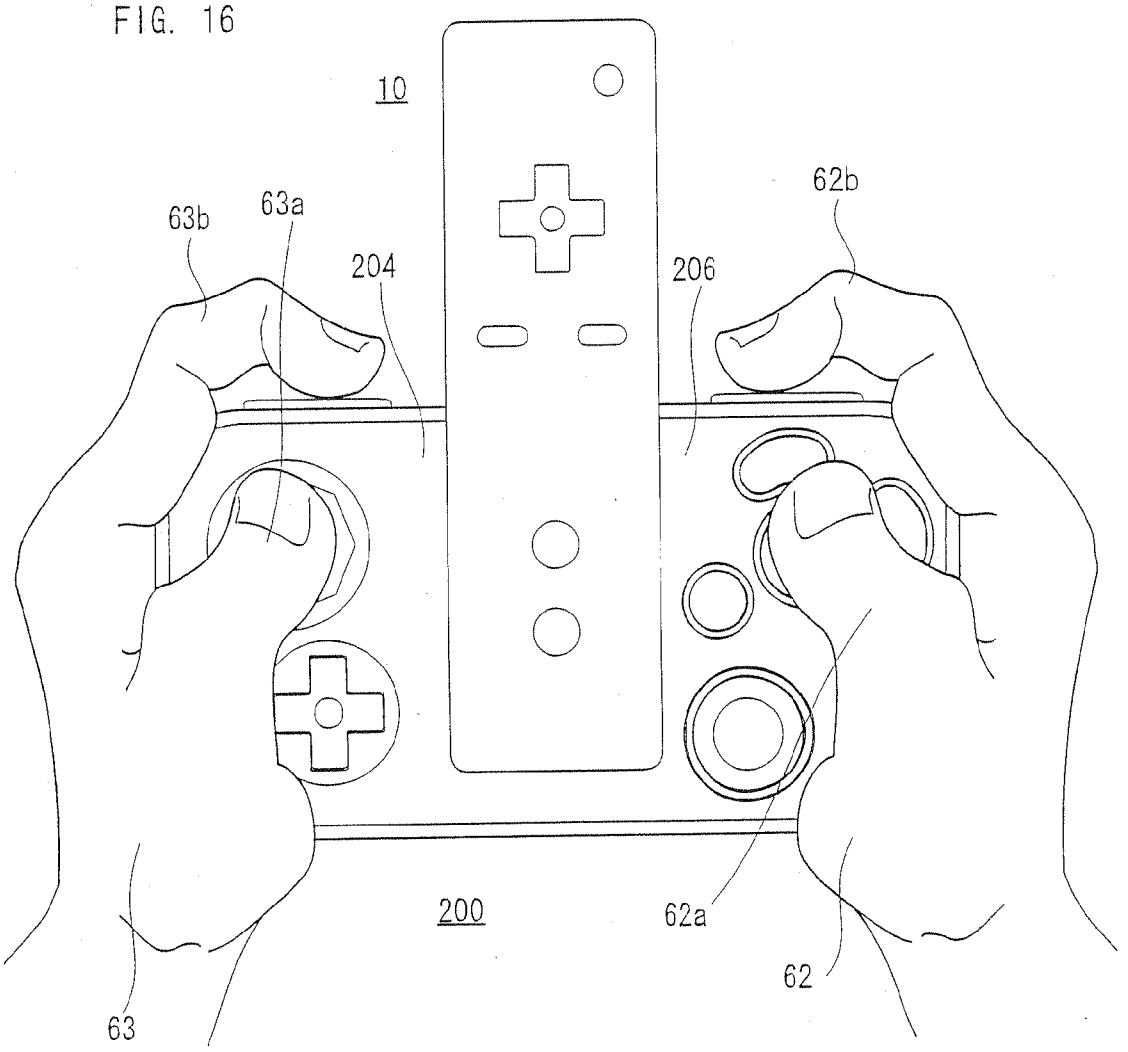

FIG. 17

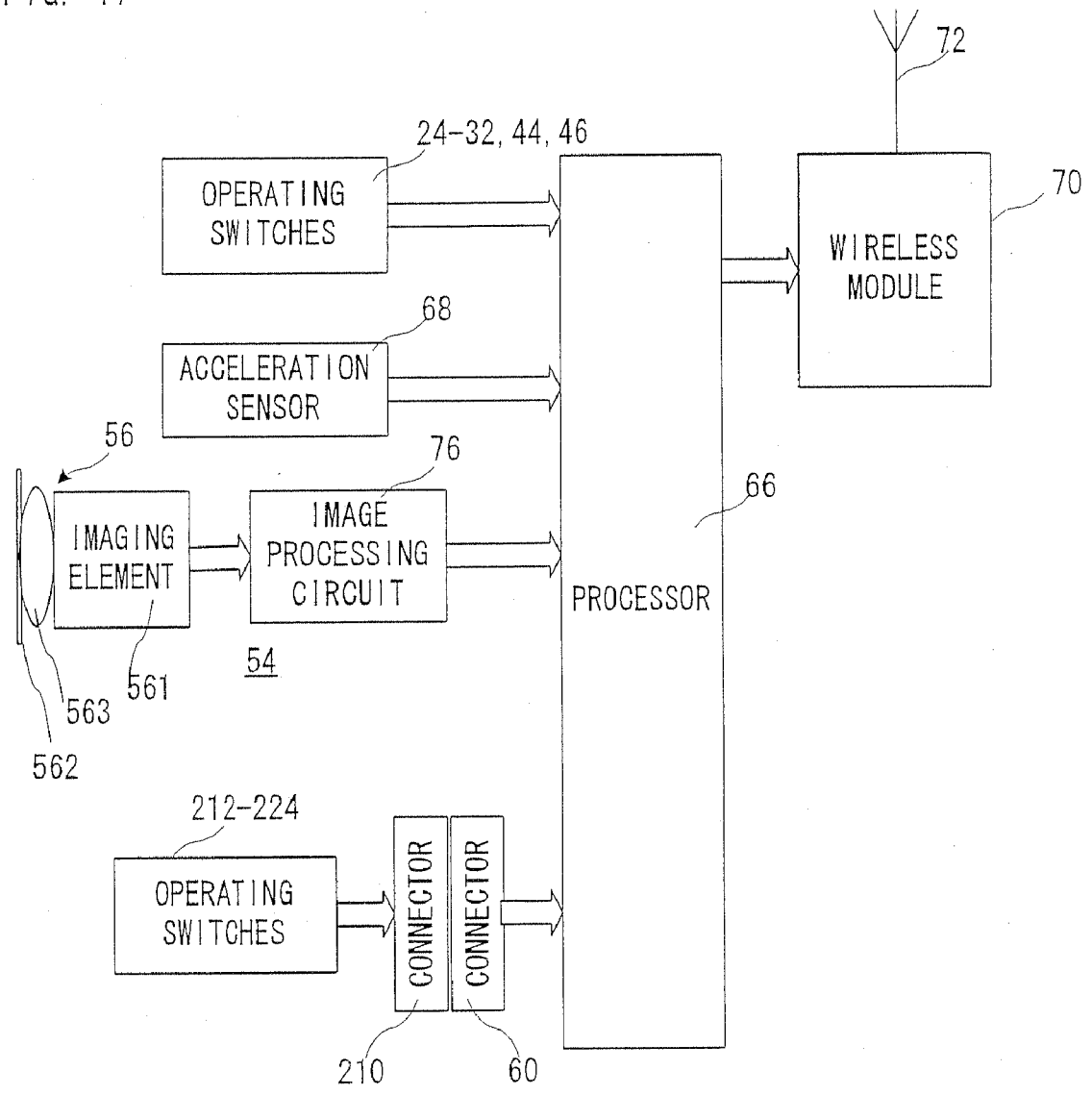
72
24-32, 44, 46
OPERATING SWITCHES
70
WIRELESS MODULE
68
ACCELERATION SENSOR
56
76
66
IMAGING ELEMENT
IMAGE PROCESSING CIRCUIT
PROCESSOR
54
561
563
562
212-224
OPERATING SWITCHES
CONNECTOR
CONNECTOR
210
60

FIG. 18

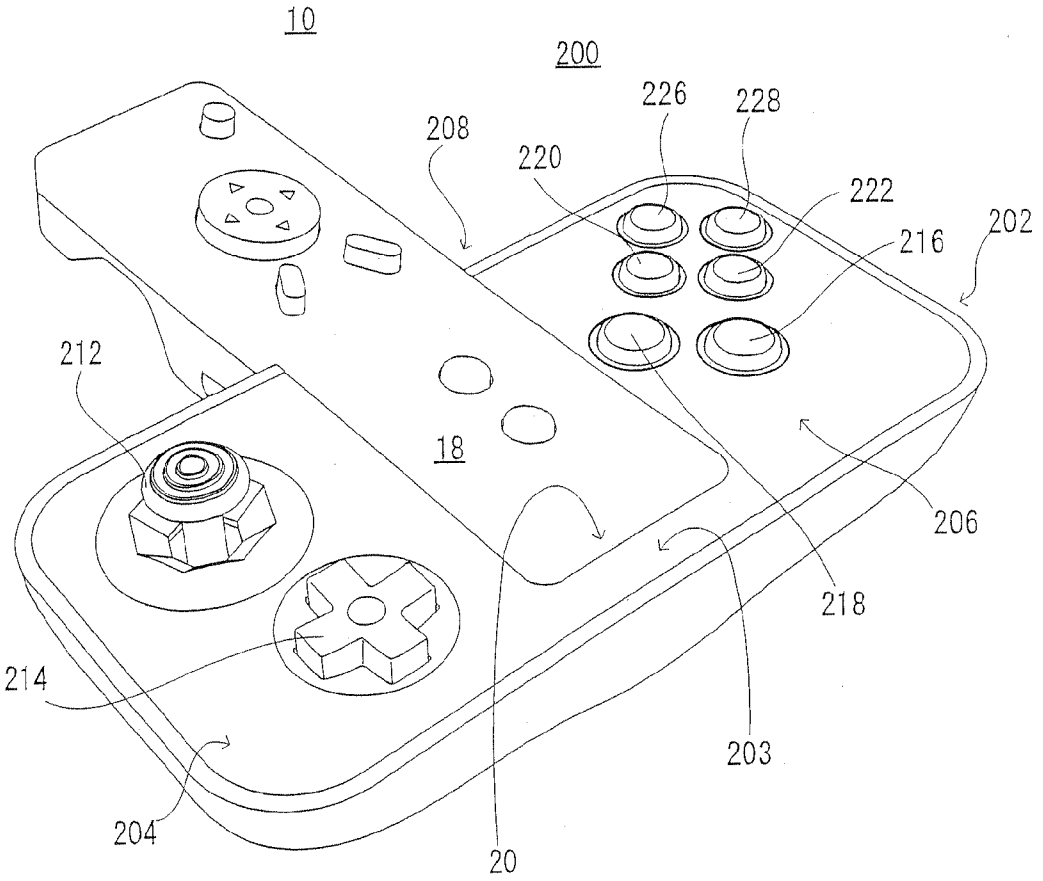

FIG. 19

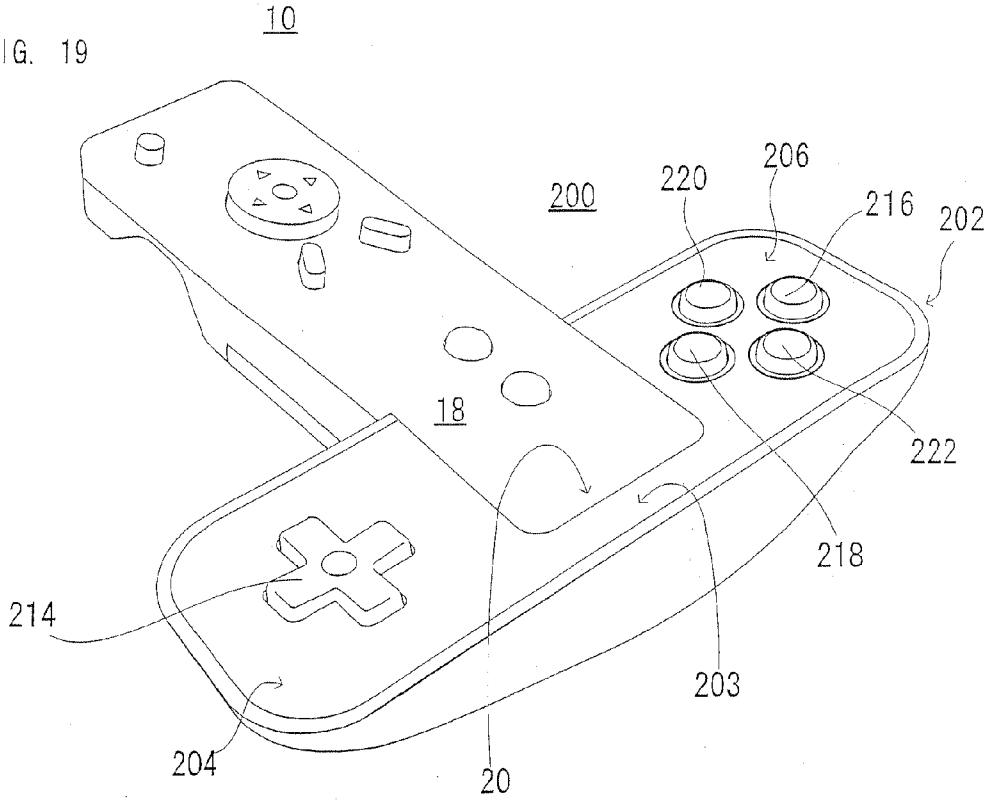
10
200
220
206
216
202
18
222
218
214
203
204
20

FIG. 20

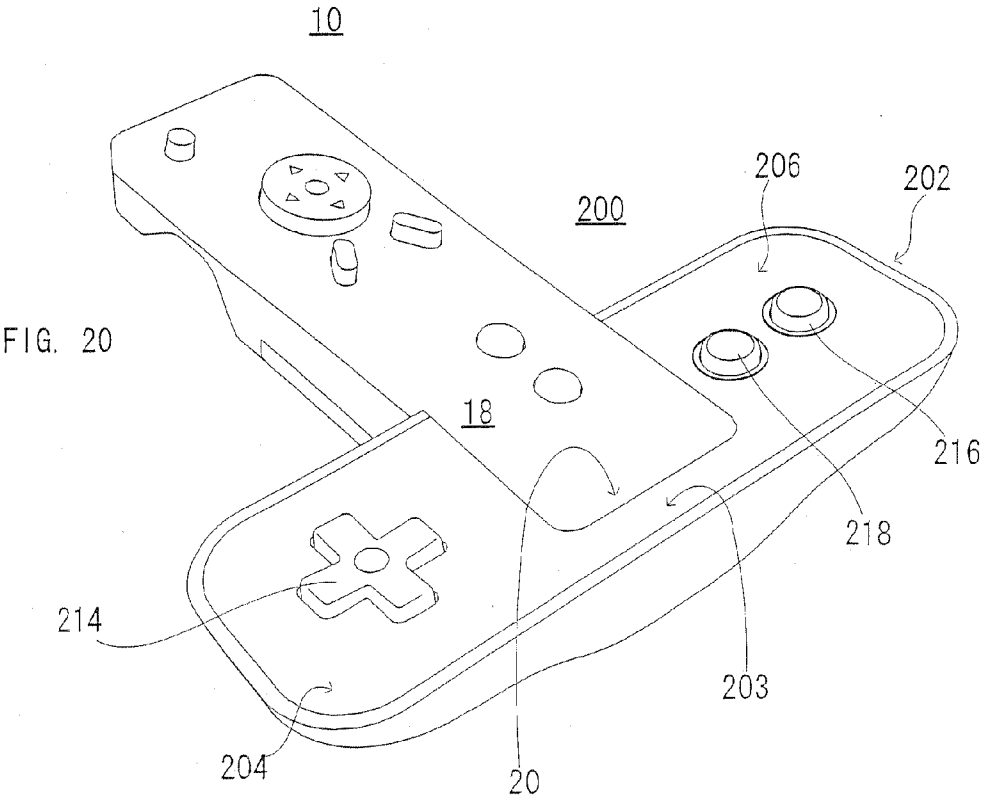
10
206
202
200
18
216
218
214
203
204
20

FIG. 21

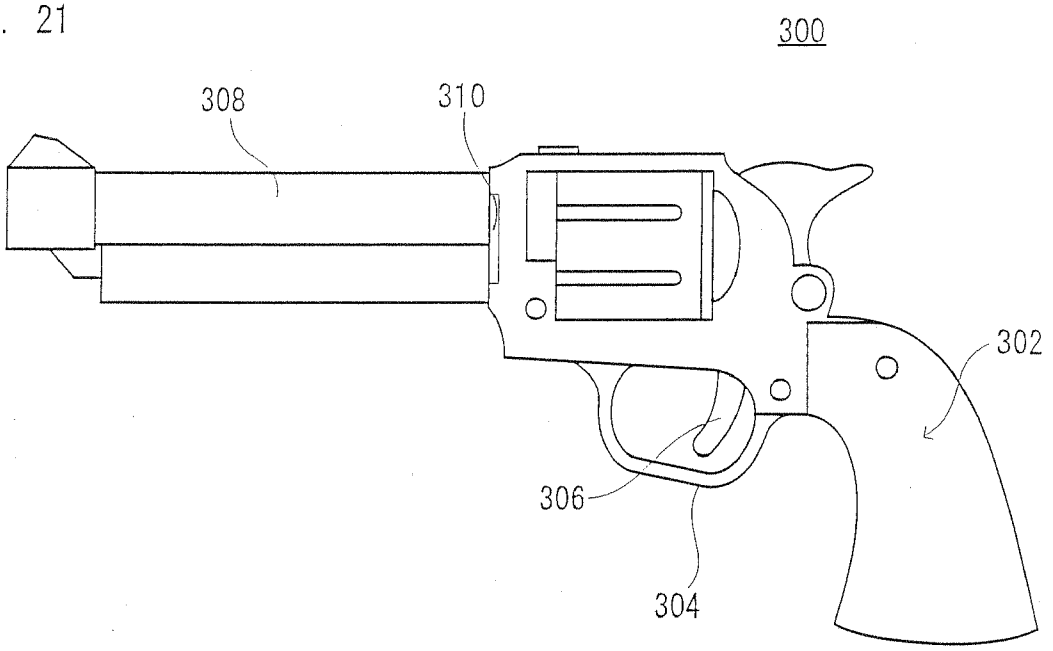

FIG. 22

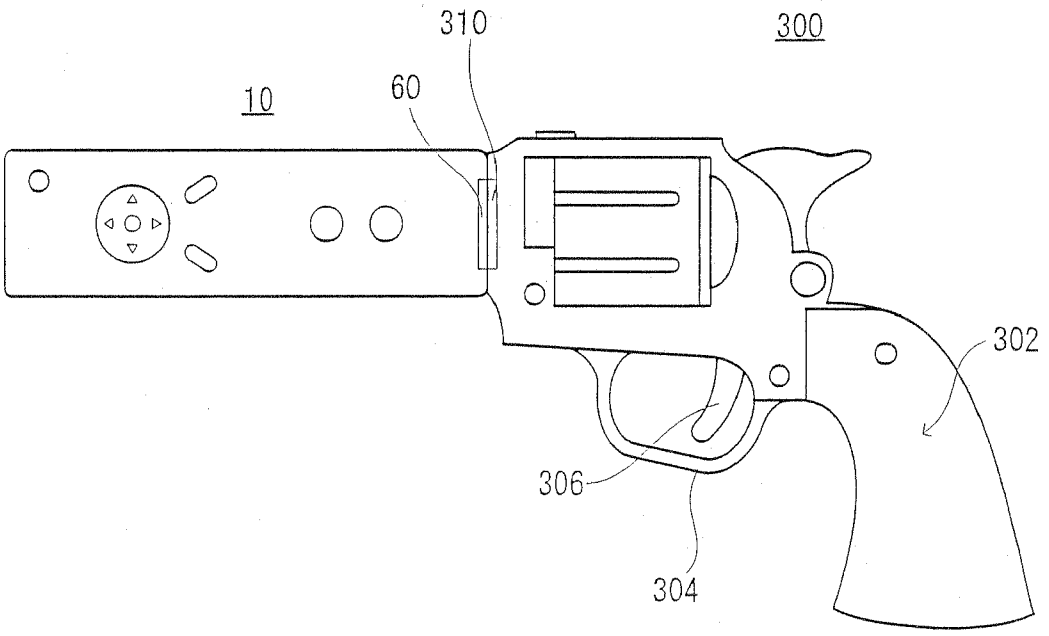

FIG. 23

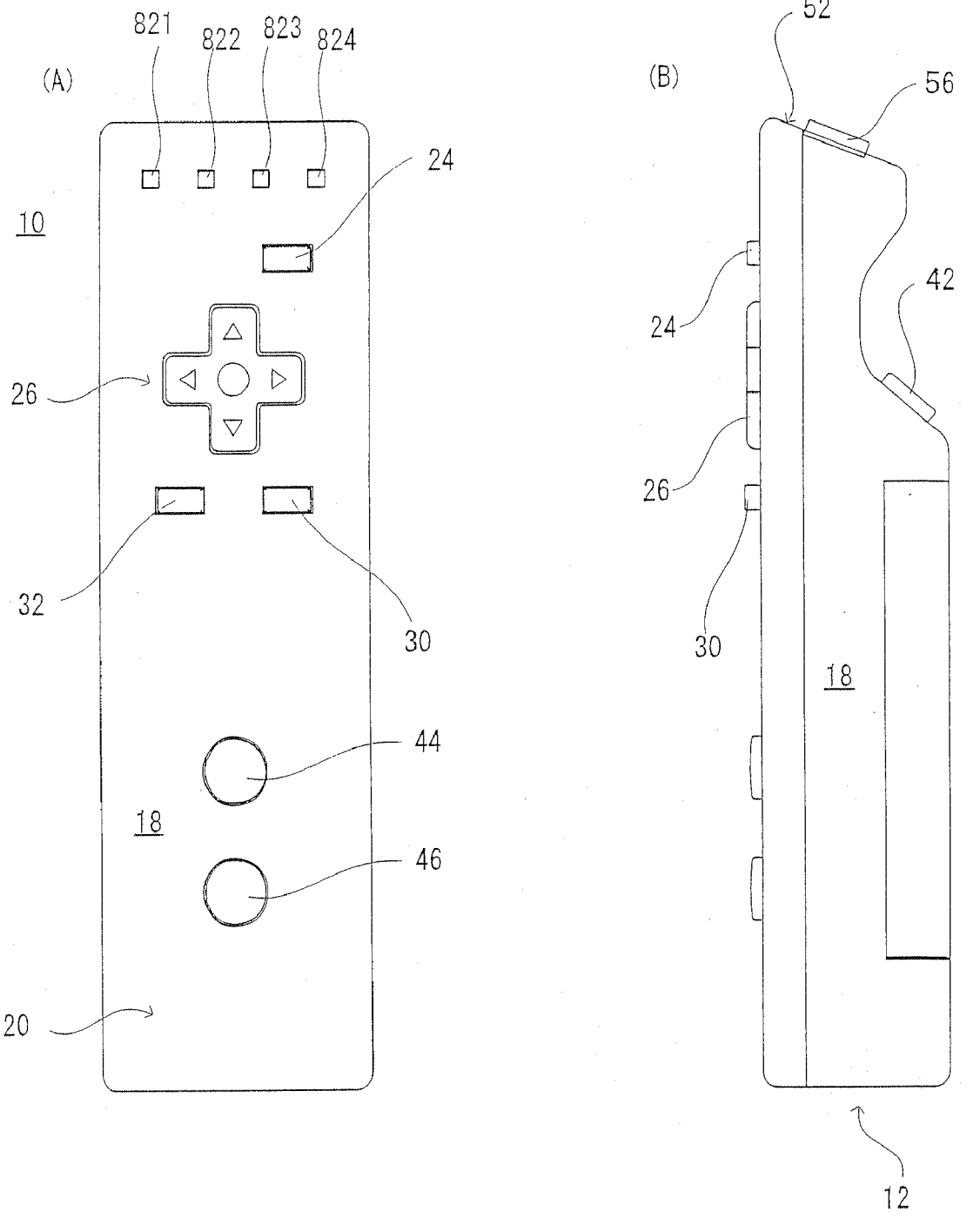
(A)
821
822
823
824
10
24
26
32
30
44
18
46
20
(B)
10
52
56
42
24
26
30
18
12

FIG. 24

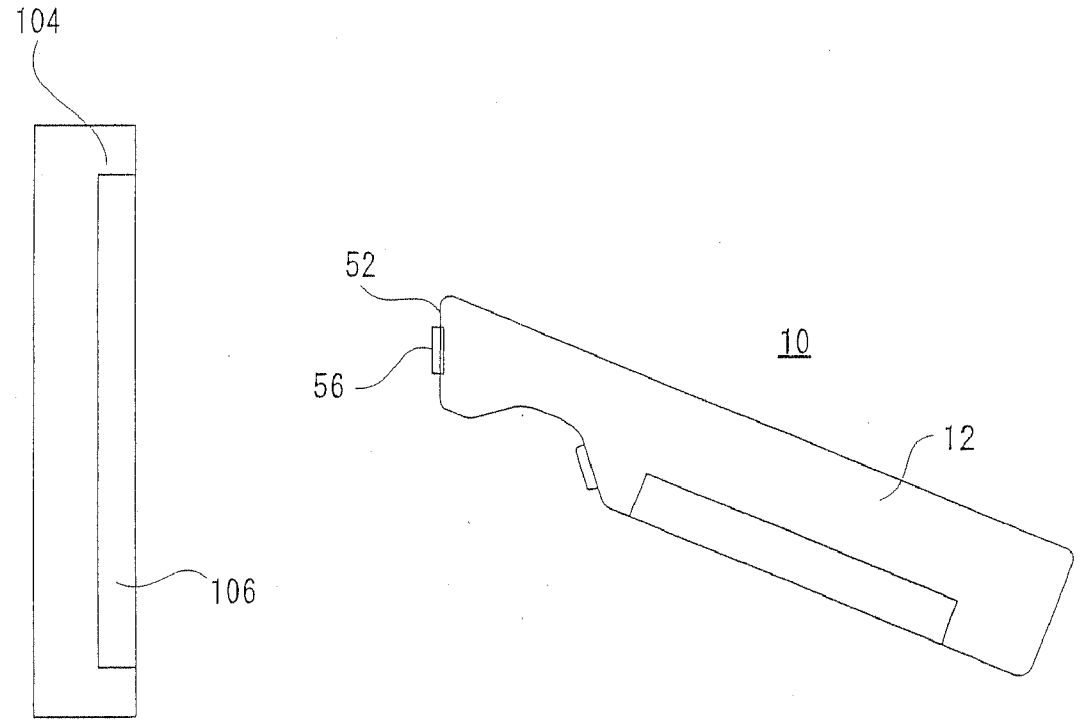

FIG. 25

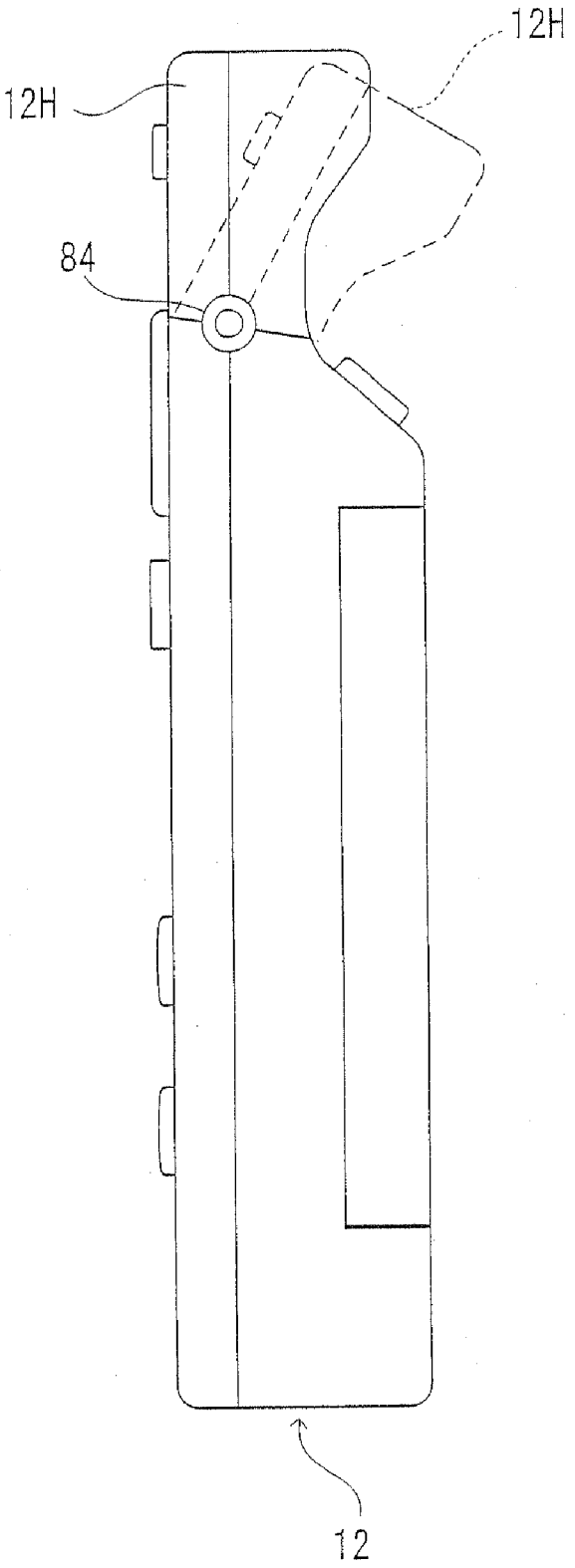

FIG. 26

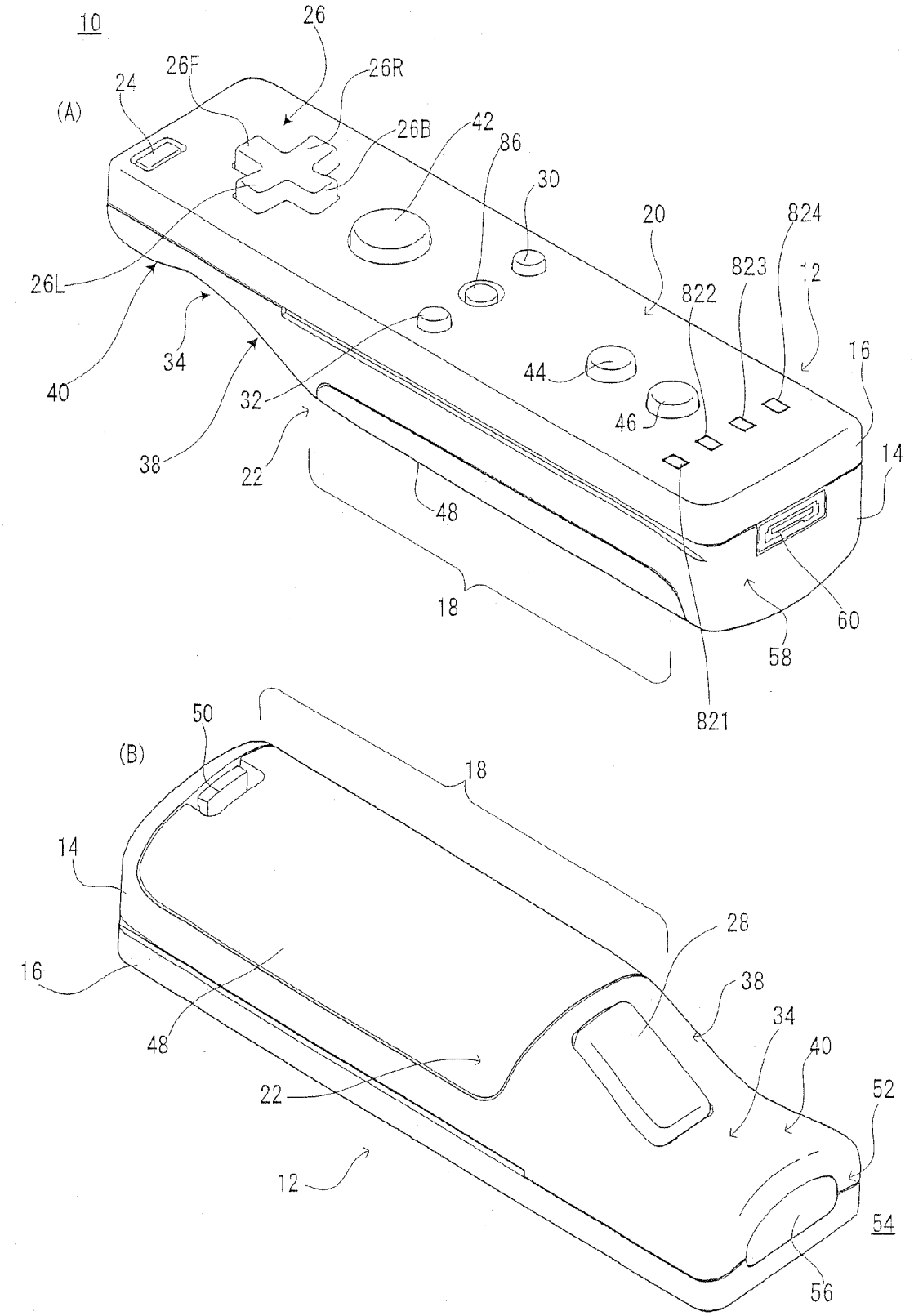
10
26
26F
26R
24
(A)
26B
42
86
30
20
824
823
12
822
26L
16
34
44
40
32
46
14
38
22
48
18
60
58
821
50
(B)
18
14
28
16
38
34
40
48
22
52
12
54
56

FIG. 27

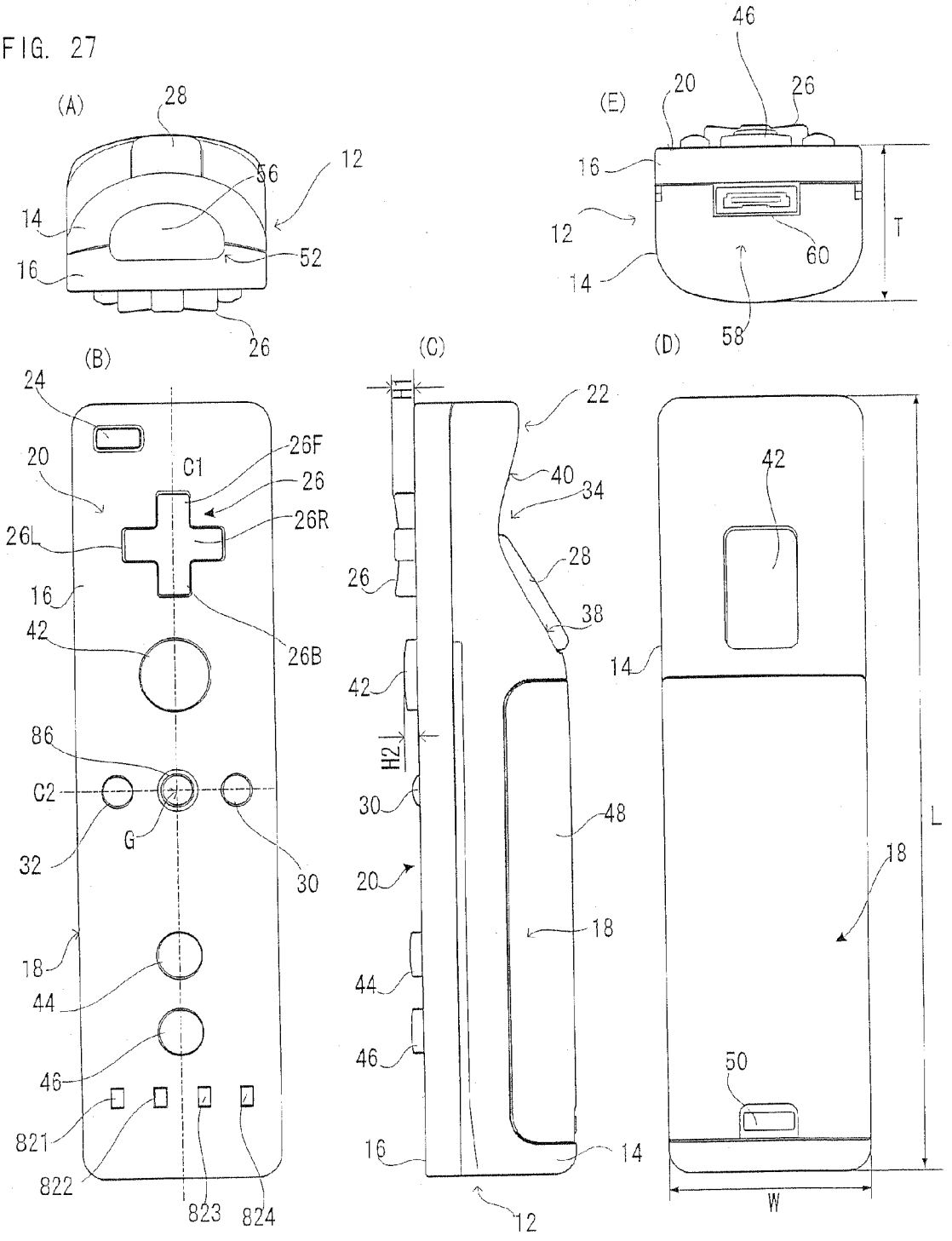
(A)
28
56
12
14
52
16
26
(E)
46
20
26
16
12
T
60
14
58
(B)
24
20
C1
26F
26
26R
26L
16
42
26B
86
C2
G
32
30
18
44
46
821
822
823
824
(C)
H1
22
40
34
28
26
38
42
H2
30
48
20
18
44
46
16
14
12
(D)
42
14
18
L
50
W

FIG. 28

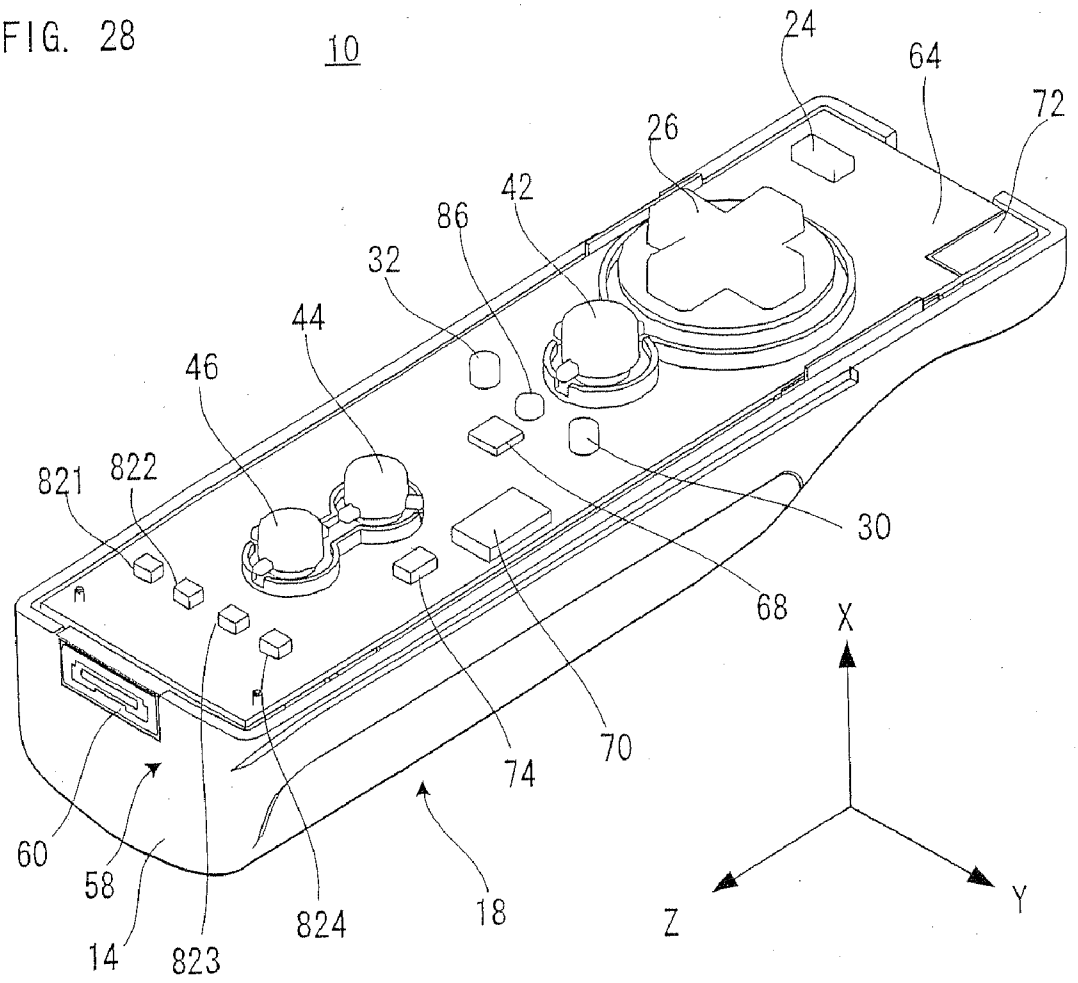
10
24
64
72
26
42
86
32
44
46
821
822
30
68
X
70
74
60
58
14
823
824
18
Z
Y

FIG. 29

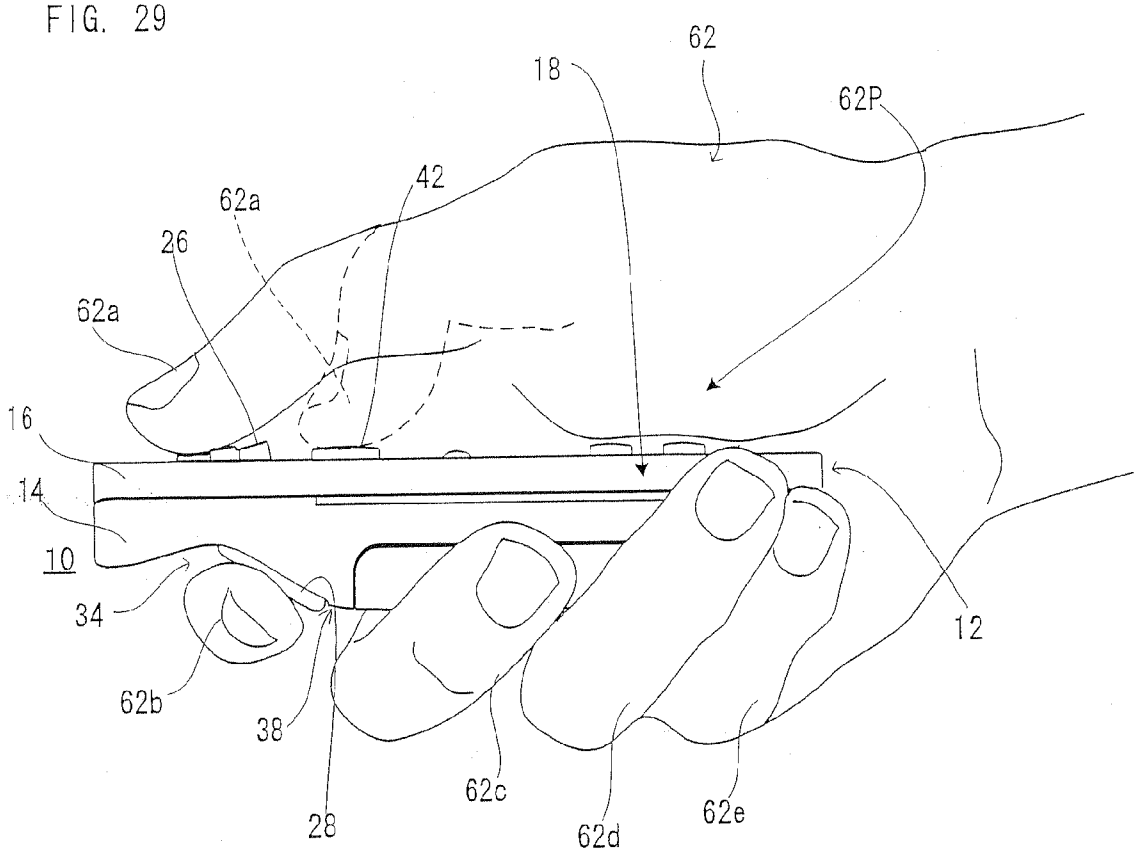

FIG. 30

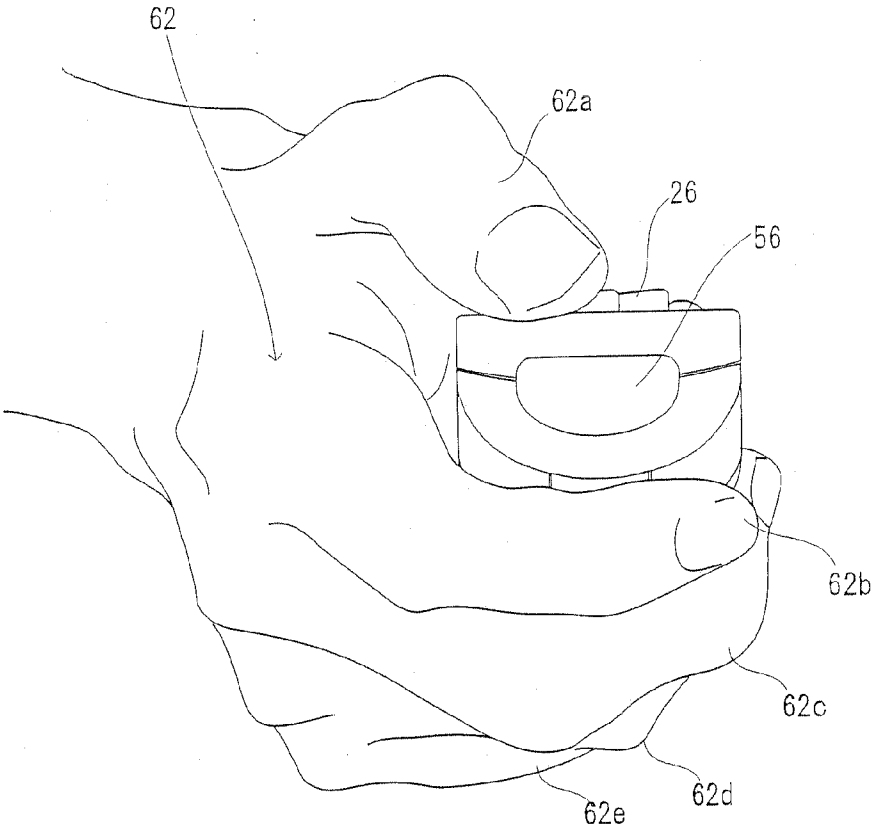

FIG. 31

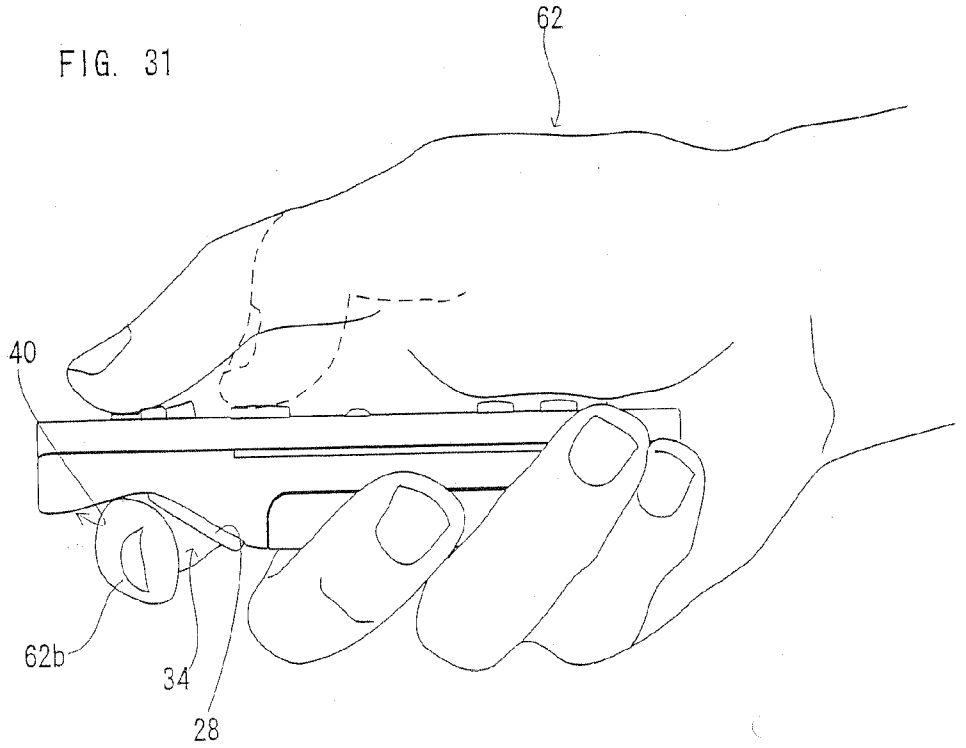

FIG. 32

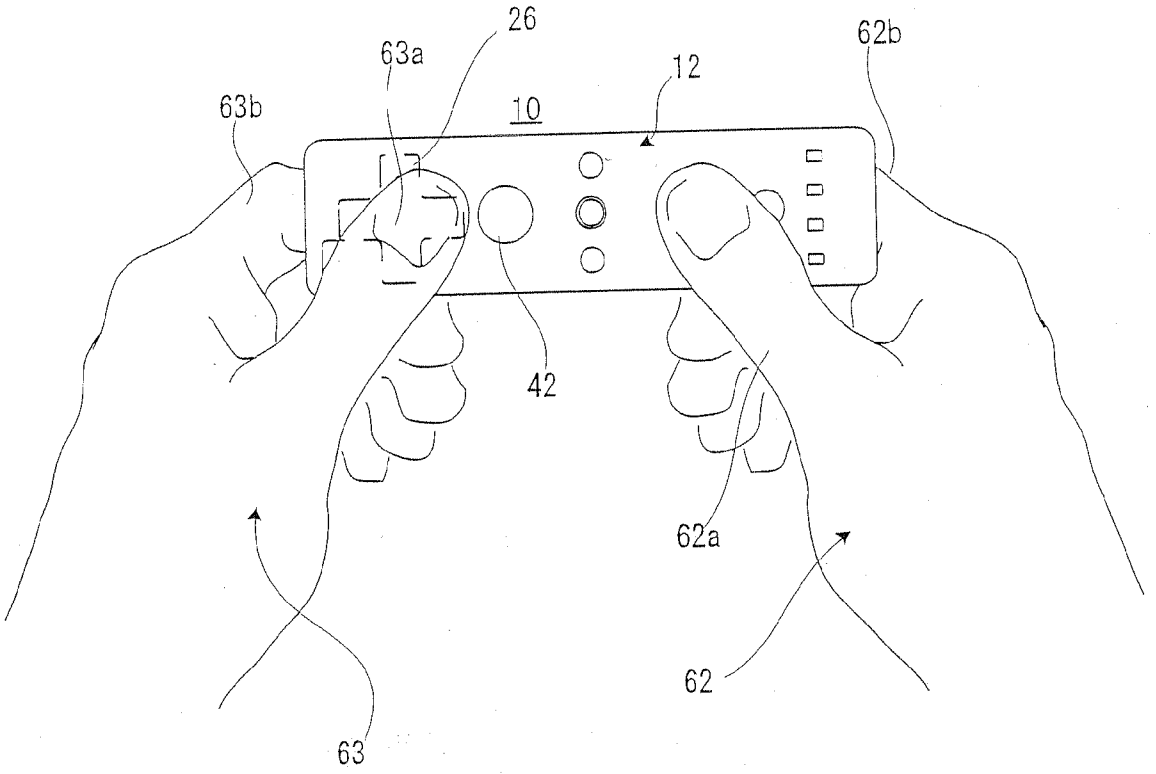

GAME OPERATING DEVICE

CROSS REFERENCE OF RELATED APPLICATION

[0001] This application is a continuation of application Ser. No. 11/446,188, filed Jun. 5, 2006, the entire content of which is hereby incorporated by reference in this application. The disclosure of Japanese Patent Application No. 2005-239984 is also incorporated herein by reference.

BACKGROUND OF THE INVENTION

[0002] 1. Field of the Invention

[0003] The present invention relates to a game operating device. More specifically, the present invention relates to a game operating device that analyzes movements of an operating device through detection of a predetermined mark or pattern in an image taken by an imaging device.

[0004] 2. Description of the Related Arts

[0005] Some operating devices as related arts of this kind of game operating device are disclosed in Japanese Patent No. 3422383 and Japanese Patent Laying-open No. 2002-233665.

[0006] The related art disclosed in Japanese Patent No. 3422383 makes it possible to play a shooting game by arranging light emitters at four locations in such a manner as to surround a video screen, providing a CCD camera to a barrel of a shooting gun to take an image containing the four light emitters, and calculating a designation position in the video screen based on information on image positions of the four light emitters contained in the imaging data at that time.

[0007] As similar to that of Japanese Patent No. 3422383, the related art of Japanese Patent Laying-open No. 2002-233665 also makes it possible to image a target containing at least four characteristic points in one plane, calculate an attitude parameter of an imaging surface with respect to the plane based on the obtained image data, and make a change to the target based on the parameter.

[0008] Japanese Patent No. 3422383 implies no specific shape of the input operating means but discloses the use of a "gun".

[0009] Additionally, Japanese Patent Laying-open No. 2002-233665 discloses a specific shape of the gun-type controller. In using this gun-type controller for input operations, the direction of designation is to be the direction of the gun barrel. However, the portions corresponding to the barrel and the grip are separately located, and also the directions of the barrel and the grip are different. Thus, it is difficult to recognize intuitively the direction of designation only with a sensation in the hand holding the grip.

[0010] In this case, moreover, the thumb and the index finger are just placed on the grip, and mainly the middle finger, the ring finger, the small finger and the palm need to hold the gun. However, the barrel significantly extends off the holding portion, which causes a problem where the center of gravity of the entire gun cannot be firmly held and thus it is hard to fix the attitude of the gun. Furthermore, with occurrence of shakes due to trigger operation, it is difficult to operate continuously the gun-type controller at a high speed in a stable manner.

SUMMARY OF THE INVENTION

[0011] Therefore, it is a primary object of the present invention to provide a novel game operating device.

[0012] It is another object of the present invention to provide a game operating device that is easy to operate while holding it by one hand and makes it easy to recognize the direction of designation.

[0013] To solve the above mentioned issues, the present invention employs the structure described below. Besides, the reference numerals, supplementary explanations, etc. in parentheses just show the correspondences with the embodiments described later, for helping the understanding of the present invention, and impose no limitations on the present invention.

[0014] The present invention of claim **1** is a game operating device comprising a longitudinal housing, a first operating portion provided on a first plane of the housing along a longitudinal direction at one end in the longitudinal direction, a second operating portion provided on a second plane opposed to the first plane of the housing, a holding portion formed in a direction of the other end along the longitudinal direction of the housing from the second operating portion, and an imaging means provided at the one end of the housing in such a manner that it can perform imaging in a direction along the longitudinal direction.

[0015] In the present invention of claim **1**, the first operating portion (**26**, **42**: reference numerals indicative of the portions corresponding to those in the embodiment. The same applies to the following reference numerals.) is provided at one end of the first plane (**20**) of the longitudinal housing (**12**) in the longitudinal direction (C**1**), and the second operating portion (**42**, **28**) is provided on the second plane (**22**) opposed to the first plane. The housing (**12**) is of shape and dimensions capable of being held by one hand of the game player, the holding portion (**18**) for holding the housing, i.e. the controller is formed at one end of the housing along the longitudinal direction from the second operating portion. The imaging means (**56**) is provided at the one end (**52**) of the housing. Also, the imaging means can perform imaging in the direction along the longitudinal direction of the housing. It is thus possible to recognize or grasp intuitively the direction of designation by the imaging means while holding the housing.

[0016] The present invention of claim **2** is a game operating device comprising a longitudinal housing having a thickness capable of being held by one hand, a first operating portion provided on a first plane of the housing along a longitudinal direction, a second operating portion provided on a second plane opposed to the first plane of the housing at a position reached by an index finger of the one hand when a thumb of the one hand is placed on the first operating portion, a holding portion formed at a position where it can be held by a palm and other fingers of the one hand when a thumb is placed on the first operating portion and an index finger is placed on the second operating portion, and an imaging means provided at an end opposed to the holding portion of the housing in such a manner that it can perform imaging in a direction along a direction in which the thumb is faced when the thumb is placed on the first operating portion and the holding portion is held by the palm and the other fingers.

[0017] In the present invention of claim **2**, the first operating portion (**26**, **42**) is provided at one end of the first plane (**20**) of the longitudinal housing (**12**) in the longitudinal direction (C**1**), and the second operating portion (**42**, **28**) is provided on the second plane (**22**) at the opposite side of the first plane. The housing (**12**) is of shape and dimensions capable of being held by one hand of the game player, the holding portion (**18**) for holding the housing is formed on the housing.

The holding portion is formed at the position where it can be held by the palm (**62**P) and the other fingers (**62***c*, **62***d*, **62***e*) of the one hand (**62**), when the thumb (**62***a*) is placed on the first operating portion and the index finger (**62***b*) is placed on the second operating portion. Thus, it is possible to operate the first operating portion and the second operating portion by the thumb and the index finger of one hand while holding the holding portion by that hand. Moreover, the imaging means (**56**) is provided at the end (**52**) opposed to the holding portion of the housing. In addition, the imaging means is provided in such a manner that it can perform imaging in the direction along the direction in which the thumb is faced when the thumb is placed on the first operating portion and the holding portion is held by the palm and the other fingers.

[0018] The present invention of claim **3** is a game operating device according to claim **1** or **2**, wherein the first operating portion and the second operating portion are arranged at positions corresponding to each other on the first plane and the second plane of the housing, respectively.

[0019] In the present invention of claim **3**, the first operating portion (**26**, **42**) and the second operating portion (**42**, **28**) are arranged on the first plane and the second plane of the housing, with correspondence in position between the two. Therefore, the housing is supported by the index finger on the second plane in operating the first operating portion on the first plane, and the housing is supported by the thumb on the first plane in operating the second operating portion on the second plane, which makes the operations more stable. In addition, it is possible to change the direction of designation of the imaging means (**56**) while holding the housing between the thumb and the index finger, which allows the direction of designation of the imaging means to be recognized or grasped more easily.

[0020] The present invention of claim **4** is a game operating device according to any one of claims **1** to **3**, wherein the first operating portion and the second operating portion are provided in a vicinity of the imaging means.

[0021] In the present invention of claim **4**, the imaging means (**56**) is provided in the vicinity of the first operating portion (**26**; **42**) and the second operating portion (**42**; **28**), which makes it easier to recognize the direction of designation of the imaging means.

[0022] The present invention of claim **5** is a game operating device according to any one of claims **1** to **4** further comprising a concave portion formed in the housing, wherein the second operating portion is provided in the concave portion.

[0023] In the present invention of claim **5**, the concave portion (**34**) is formed in the second plane of the housing (**12**), for example, and the second operating portion (**42**; **28**) is arranged in the concave portion. Accordingly, it is possible to place the index finger in the concave portion, which makes it possible to operate the second operating portion in a quick and reliable manner.

[0024] The present invention of claim **6** is a game operating device according to claim **5**, wherein the concave portion includes a first inclined surface with inclination toward the holding portion and a second inclined surface with inclination toward an opposite side of the holding portion, and the second operating portion is provided on the first inclined surface of the concave portion.

[0025] In the present invention of claim **6**, the concave portion (**34**) includes the first inclined surface (**3 8**) extending in the direction of the holding portion (**18**) and the second inclined surface (**40**) in the opposite direction. As a consequence, the second operating portion can be operated quickly and reliably just by bending the index finger in the concave portion toward the holding portion.

[0026] The present invention of claim **7** is a game operating device according to claim **6**, wherein the concave portion is formed in such a manner that an angle of inclination of the second inclined surface toward the first plane is smaller than an angle of inclination of the first inclined surface toward the first plane.

[0027] In the present invention of claim **7**, the angle of inclination of the first inclined surface (**38**) is set so as to be smaller than the angle of inclination of the second inclined surface (**40**). This brings about the advantages that the housing is easy to hold by both hands and the index finger can be reliably taken off the second operating portion.

[0028] The present invention of claim **8** is a game operating device according to claim **5**, wherein the concave portion includes at least a parallel surface approximately parallel to the first plane and an inclined surface between the parallel surface and the holding portion, and the second operating portion is provided on the inclined surface.

[0029] In the present invention of claim **8**, the concave portion (**34**) includes the valley (**36**), for example, and the bottom of the valley forms a plane approximately parallel to the first plane. Meanwhile, the holding portion (**18**) is provided rearward of the housing. Accordingly, the inclined surface (**38**) is formed linking the bottom of the valley and the holding portion, and the second operating portion (**26**) is placed on the inclined surface. Thus, the second operating portion can be naturally operated when the index finger is bent.

[0030] The present invention of claim **9** is a game operating device according to any one of claims **1** to **8**, further comprising a vibrator provided at a position corresponding to the holding portion within the housing.

[0031] In the present invention of claim **9**, the vibrator (**80**) is arranged on the side opposed to the imaging means (**56**) in the longitudinal direction of the housing (**12**), which decreases a possibility that the vibrations from the vibrator affect adversely imaging operation by the imaging information arithmetic unit. That is, a distance becomes long between the vibrator and the imaging information arithmetic unit, thereby preventing an imaging element of the imaging information arithmetic unit from being blurred as much as possible.

[0032] The present invention of claim **10** is a game operating device according to any one of claims **1** to **9**, further comprising a battery provided at a position corresponding to the holding portion within the housing.

[0033] In the present invention of claim **10**, the battery (**78**) as a relatively heavy matter is stored within a range of the holding portion (**18**) of the housing (**12**), and thus a center of gravity G (FIG. **2** (B)) is reliably contained within the range of the holding portion. This makes it possible to change stably the direction of designation of the imaging means while holding the holding portion **18**.

[0034] According to the present invention, it is easy to operate the first operating portion and the second operating portion while holding the controller by one hand, which makes it possible to obtain a novel game operating device that is high in flexibility and capable of being operated only by one hand. Additionally, the imaging range of the imaging means contains the direction along the longitudinal direction of the holding portion, which makes it possible to recognize or

grasp intuitively the direction of designation of the imaging means while holding the housing.

[0035] The above described objects and other objects, features, aspects and advantages of the present invention will become more apparent from the following detailed description of the present invention when taken in conjunction with the accompanying drawings.

BRIEF DESCRIPTION OF THE DRAWINGS

[0036] FIG. **1** is a perspective view showing a controller (first controller) forming one embodiment of the present invention, and FIG. **1** (A) presents a front side, upper side and left side, and FIG. **1** (B) shows an upper side, rear side and right side.

[0037] FIG. **2** is a drawing of a hexahedron indicative of the first controller of this embodiment, excluding a view of a left side, and FIG. **2** (A) shows a front side, FIG. **2** (B) a plane side, FIG. **2** (C) a right side, FIG. **2** (D) a bottom side, and FIG. **2** (E) a rear side, respectively.

[0038] FIG. **3** is a side view of the first controller of the embodiment held by one hand.

[0039] FIG. **4** is a front view of the first controller of the embodiment held by one hand.

[0040] FIG. **5** is an illustrative view showing the state of FIG. **3** in which an index finger is taken off an A button.

[0041] FIG. **6** is a perspective view of the first controller shown in FIG. **1** and FIG. **2** from which an upper housing is removed.

[0042] FIG. **7** is a perspective view of the first controller shown in FIG. **1** and FIG. **2** from which a lower housing is removed.

[0043] FIG. **8** is a block diagram showing electrical circuit structure of this embodiment.

[0044] FIG. **9** is a schematic view of a situation in which a game is played by means of an imaging information arithmetic unit with the use of the first controller of this embodiment.

[0045] FIG. **10** is an illustrative view of a situation in which an imaging range of the imaging information arithmetic unit covers the longitudinal direction of the holding portion in alignment with the same.

[0046] FIG. **11** is an illustrative view showing a situation in which, because of a relationship between an imaging range (viewing angle) of the imaging device of the first controller and a half-value angle of light intensity of LED module, two LED modules exist concurrently within the viewing angle of the imaging device.

[0047] FIG. **12** is an illustrative view showing a situation in which, because of a relationship between an imaging range (viewing angle) of the imaging device of the first controller and a half-value angle of light amount of LED module, only one LED module exists within the viewing angle of the imaging device.

[0048] FIG. **13** is a perspective view showing a controller (second controller) constituting another embodiment of the present invention.

[0049] FIG. **14** is a perspective view showing a combination of the second controller of this embodiment and the first controller of the preceding embodiment.

[0050] FIG. **15** is a right side view showing the combination of the second controller of this embodiment and the first controller of the preceding embodiment.

[0051] FIG. **16** is an illustrative view showing the case of performing an operation with the combination of the first controller and the second controller.

[0052] FIG. **17** is a block diagram showing electric circuit structure with the combination of the first controller and the second controller.

[0053] FIG. **18** is a perspective view showing a combination of another second controller constituting another embodiment of the present invention and the first controller.

[0054] FIG. **19** is a perspective view showing a combination of still another second controller constituting still another embodiment of the present invention and the first controller.

[0055] FIG. **20** is a perspective view showing a combination of further another second controller constituting further another embodiment of the present invention and the first controller.

[0056] FIG. **21** is an illustrative view showing a gun-type adapter constituting yet another embodiment of the present invention.

[0057] FIG. **22** is an illustrative view of the adapter of FIG. **20** embodiment to which the first controller is attached.

[0058] FIG. **23** is an illustrative view showing another embodiment of the first controller, and FIG. **23** (A) shows a layout of operating switches, in particular, on an upper surface thereof, and FIG. **23** (B) denotes a right side thereof.

[0059] FIG. **24** is an illustrative view showing the imaging device of the first controller of FIG. **23** that is correctly faced toward a screen of a display.

[0060] FIG. **25** is an illustrative view showing still another embodiment of the first controller.

[0061] FIG. **26** presents further another embodiment of the first controller, and FIG. **26** (A) is a perspective view showing a rear side, upper side and left side, and FIG. **26** (B) is a perspective view showing a bottom side, front side, plane side and right side.

[0062] FIG. **27** is a drawing of a hexahedron excluding a view of a left side, and FIG. **2** (A) shows a front side, FIG. **2** (B) a plane side, FIG. **2** (C) a right side, FIG. **2** (D) a bottom side, and FIG. **2** (E) a rear side, respectively.

[0063] FIG. **28** is a perspective view showing the first controller shown in FIG. **26** and FIG. **27** from which the upper housing is removed.

[0064] FIG. **29** is a side view of the first controller of this embodiment held by one hand.

[0065] FIG. **30** is a front view of the first controller of this embodiment held by one hand.

[0066] FIG. **31** is an illustrative view showing the state of FIG. **29** in which the index finger is taken off the B button.

[0067] FIG. **32** is a top view of the first controller of this embodiment that is held and operated by both hands.

DETAILED DESCRIPTION OF THE PREFERRED EMBODIMENTS

[0068] A controller **10** of one embodiment of the present invention shown in FIG. **1** and FIG. **2** includes a longitudinal housing **12** molded of plastic or metal, for example. The housing **12** has a required depth and includes a lower housing **14** having a shape of a flat rectangle with a top-surface opening and an bottom, an upper housing **16** assembled integrally with the lower housing **14** in such a manner as to close up the top-surface opening of the lower housing **14**, and in particular, has a cross-section rectangle on the whole as shown in FIG. **2** (A) and FIG. **2** (E).

[0069] The housing **12** has a holding portion **18** and is of size capable of being held by one hand of an adult or child on the whole. Its length L (FIG. **2** (D)) in a longitudinal direction (a direction along a center line C**1** shown in FIG. **2** (B)) is set at 8 to 15 cm, for example, and its width (orthogonal to the longitudinal direction C**1**) W (FIG. **2** (D)) is set at 2 to 4 cm, for example, respectively.

[0070] Alternatively, the shape of the housing **12** is not limited to a longitudinal shape with a plane rectangle and may be a longitudinal shape with a plane oval or the like. Likewise, its cross-section shape is not limited to a rectangle and may be a circle or other polygons.

[0071] A flat main surface of the upper housing **16** constitutes an upper surface **20** of the housing **12**. As can be seen well from FIG. **1** (A) and FIG. **2** (B) in particular, the upper surface **20** of the housing **12** is a rectangle extending along the longitudinal direction of the housing **12**. Also, the upper surface **20** is equivalent to a first plane, and a surface or main surface **22** of the lower housing **18** is equivalent to a second plane opposed to the first plane **20**. The second plane **22** is approximately parallel with the first plane **20**. Besides, an upward direction is assumed to be forward (side of one end) and a downward direction is assumed to be backward (side of the other end) in the longitudinal direction C**1** of the housing **12**.

[0072] A power switch **24** is provided on the upper surface **20** of the housing **12**, on the slightly right side of the center in a width direction of the upper surface **20** (indicated by the center line C**1** in FIG. **2** (B)) in the vicinity of the housing front end (one end). The power switch **24** is intended to turn on or off an electric power source to a game machine **112** (FIG. **9**) by a remote operation.

[0073] Besides, in this embodiment, a power switch for turning on or off the controller **10** itself is not provided. The controller **10** is turned on by operating any one of the operating switches of the controller **10**, and is automatically turned off if no operation is performed for a predetermined period of time or more.

[0074] A direction switch **26** is provided on the width-direction center line C**1** of the upper surface **20**, forward of the longitudinal-direction center of the housing **12** (indicated by a center line C**2** in FIG. **2** (B)). The direction switch **26** is a combined switch of four-direction push switches and center switch, and includes operating portions **26**F, **26**B, **26**R and **26**L for four directions indicated by arrows, forward (or up), backward (or down), right and left, and also includes a center switch **28**. The operating portions **26**F, **26**B, **26**R and **26**L are arranged on a single key top, in a shape of a ring with a turn of 90 degrees among them. By operating any one of them, one of contacts (not shown) which are arranged in a shape of a polygon corresponding individually to these operating portions **26**F, **26**B, **26**R and **26**L is selectively turned on, thereby selecting any one of the directions of upward, downward, right and left. For example, by operating any one of the operating portions **26**F, **26**B, **26**R and **26**L, one of those contacts is turned on to make it possible to designate a movement direction of a character or object (player character or player object) capable of being operated by a game player or to designate a movement direction of a cursor.

[0075] The center switch **28** is a single push-button switch and may be used as a so-called B button. As is well known, the B button **28** can be used for changing the game mode selected by means of a select switch **32** described later, canceling the action decided by means of an A button described later, and so on.

[0076] Besides, as is well known, such a combined switch as described in relation to the embodiment is highly utilized for cellular telephones and the like (see http://www.jpo.go.jp/shiryou/s_sonota/hyoujun_gijutsu/small_switch/b-6-2.htm, for example), and thus a more detailed description of it is omitted.

[0077] As stated above, the direction switch **26** of the embodiment includes the contacts (not shown) arranged in the shape of a polygon (rectangle or rhombus) as to indicate individual directions (the four directions in the embodiment) so that these contacts are operated by means of the operating portions **26**F, **26**B, **26**R and **26**L formed on a single key top. Alternatively, the operating portions **26**F, **26**B, **26**R and **26**L may be provided as individual key tops so that one contact is operated by means of each corresponding key top.

[0078] In addition, the direction switch **26** may be a cross key or a joystick. In the case of the direction switch **26** as a joystick, an arbitrary direction and position can be designated by turning its tip end 360 degrees in an arbitrary direction or deflecting the same.

[0079] As can be seen well from FIG. **2** (B), a start switch **30** and a select switch **32** having key tops arranged in a shape of the Japanese KATAKANA character ""ノ丶"" with the width-direction center line C**1** of the housing **12** between them are provided on the upper surface **20**, backward of the direction switch **26**. The start switch **30** is used for starting (re-starting) and pausing a game and the like. The select switch **32** is used for selecting a game mode, etc.

[0080] Additionally, the start switch **30** and the select switch **32** may be provided in an arbitrary layout such as one transverse line and one vertical line, not limited to the shape of the Japanese KATAKANA character ""ノ丶"" presented in relation to the embodiment.

[0081] A concave portion **34** is formed on the second plane **22** of the lower housing **14**, at a position approximately corresponding to the position of the direction switch **26**. The concave portion **34** is a concave formed so as to reach from one end of the other of the second plane **22** in a width direction, as can be understood from FIG. **1** and FIG. **2** (C). Additionally, strictly speaking, the concave portion **34** of this embodiment is formed slightly forward of the direction switch **26**, as can be seen from a contrast between FIG. **2** (B) and FIG. **2** (C). The concave portion **34** is formed at a position where, when the player holds the controller **10**, i.e., the holding portion **18** of the housing **12** by one hand as described later, the index finger of the same hand naturally falls. Therefore, a width of a valley **36** of the concave portion **34** (in the longitudinal direction of the housing **12**) is formed in a size that allows the index finger to come into there. The concave portion **34** has two inclined surfaces **38** and **40** rising from the valley **36**. The former inclined surface **38** is formed with a rise from the valley **36** toward the rear of the housing **12**, and conversely, the latter inclined surface **40** is rising from the valley **36** toward the front of the housing **12**.

[0082] An A button **42** is provided on the inclined surface **38** on the rear side of the concave portion **34** of the lower housing **14**. The A button **42** is provided at a position corresponding to the direction switch **26**. Here, the corresponding position means a position where the direction switch **26** and the A button **42** are arranged close to each other as viewed through from the upper surface of housing **12**, and more

preferably, the direction switch **26** and the A button **42** are arranged in such a manner as to be at least partially overlapped. As can be seen well from the illustration, the bottom of the valley **36** is on a plane approximately parallel with the upper surface **20**, i.e., the first plane of the housing **12**, and the rear inclined surface **38** on which the A button **42** is arranged is formed between the bottom parallel surface of the valley **36** and the holding portion **18** formed on the rear (other) side of the housing **12** described earlier. Also, the A button **42** is a push switch having a switch contact (not shown) and a key top for turning on or off the switch contact, and the key top is provided so as to move in a direction perpendicular to the inclined surface **38**. Therefore, as described later, the player can turn on the A button **42** just by putting his/her index finger or middle finger in the concave portion **34** and pulling it toward him/her. That is, the index finger or the middle finger can be positioned in the concave portion **34**, which makes it possible to operate the A button **42** quickly and reliably when needed.

[0083] Besides, the A button **42** allows a player character or a player object to perform an arbitrary action such as punching, throwing, capturing (obtaining), riding and jumping. For example, in an action game, the A button **42** makes it possible to designate jumping, punching and manipulating a weapon, etc. Also, in a role-playing game (RPG) or simulation RPG, the A button **42** makes it possible to designate the obtainment of an item, the selection and decision of a weapon and a command, and so on.

[0084] In addition, the above stated holding portion **18** is formed on the housing, backward of the concave portion **34**, i.e., the A button **42**. As described later, in using the controller **10**, the controller **10**, i.e., the housing **12** is held in such a manner that the player's palm of one hand wraps the holding portion **18**. At that time, the player can hold stably the holding portion **18** only by one hand because the controller **10**, i.e., the housing **12** is of a size or thickness capable of being held by one hand.

[0085] Moreover, the key top of the A button **42** is turned on by pushing it in the direction perpendicular to the inclined surface **38**, that is, the direction toward the holding portion **18**. The inclined part **38** is not perpendicular to the upper surface of the housing **12**, that is, the first plane **20** and, in the end, the key top of the A button **42** is pushed in a direction not perpendicular to the upper surface **20**. On the contrary, the B button **28** and the direction switch **26** are turned on by pushing them in the direction perpendicular to the upper surface **20** of the upper housing **16**. These push directions mean directions in which the index finger and the thumb can apply pressure naturally in holding the holding portion **18**. This makes it possible to support a periphery of the operating portion continuously by the thumb and the index finger during the operation while holding the holding portion **18**, and perform the operation in the stable holding state at any time.

[0086] Furthermore, an X button **44** and a Y button **46** are arranged on the width-direction center line C1 and backward of the longitudinal-direction center C2 of the housing **12**, in a straight line with a spacing between the two. These X button **44** and Y button **46** are used to make adjustments to view point position and view point direction in displaying a three-dimension game image, that is, make adjustments to a position and a field angle of a virtual camera.

[0087] A battery cover **48** is detachably attached to the lower housing **14** forming the holding portion **18**, and a battery **78** shown in FIG. **7** is stored inside the battery cover **48**. Thus, the controller **10** operates with the battery **78** as a power source. In addition, the battery cover **48** can be detached by removing an engagement pawl **50** from the lower housing **14**.

[0088] As stated above, the battery **78** as a relatively heavy matter is stored within a range of the holding portion **18** of the housing **12**, and thus a center of gravity G (FIG. **2** (B)) is reliably contained within the range of the holding portion **18**. This makes it possible to perform stably the displacement or movement of the controller **10** while holding the holding portion **18**.

[0089] An infrared imaging device **56** forming one part of an imaging information arithmetic unit **54** described later in detail is arranged on a front-end surface **52** (FIG. **1** and FIG. **2** (A)) of the housing **12**, and a **32**-pin edge connector **60** is provided on a rear-end surface **58** (FIG. **1** and FIG. **2** (E)) of the housing **12**, for example. The connector **58** is used to attach and connect the controller of this embodiment (the first controller) **10** to another second controller (described later), and so on.

[0090] The controller **10** structured in such a manner can be held by one hand of the game player (not shown). FIG. **3** and FIG. **4** show a state in which the player holds the controller **10** by his/her hand. Referring to these drawings, a player's palm **62**P and balls of middle finger **62***c*, ring finger **62***d* and small finger **62***e* of one hand **62** (right hand in the drawings) hold the holding portion **18** of the housing **12** in such a manner as to wrap the holding portion **18** lightly. In the state, a thumb **62***a* of the hand **62** is positioned on the direction switch **26** and an index finger **62***b* is positioned in the valley **36** of concave portion **34** of the lower housing **14**. More specifically, the direction switch **26** is arranged at a position reached by the thumb **62***a* of the hand **62** holding the housing **12**, that is, at a position capable of being operated by the thumb **62***a*. The A button **42** is arranged at a position reached by the index finger **62***b* of the hand **62** holding the housing **12**, that is, at a position capable of being operated by the index finger **62***b*. Accordingly, the player can operate the direction switch **26** by the thumb **62***a* and operate the A button **42** by the index finger **62***b* while holding the housing **12** by the hand **62**. More specifically, the index finger **62***b* of the hand **62** is positioned in such a manner as to make contact with a surface of the valley **36** of the above stated concave portion **34** formed in the lower housing **14**. By bending the index finger **62***b* toward him/her (rightward in FIG. **3**) in that state, the user can push the key top of the A button **42** by the ball of the index finger **62***b* in a direction perpendicular to the near-side inclined surface **38** of the concave portion **34**. Consequently, the player can operate the A button **42** by the index finger **62***b* while holding the housing **12** by the hand **62**.

[0091] Besides, the same applies if the holding hand **62** is a left hand.

[0092] In addition, the A button **42** is described above as being operated by the index finger **62***b*. Alternatively, by further providing an A2 button (not shown) of the same shape as the A button backward of the A button **42**, the housing **12** may be held by the palm **62**P and the balls of the ring finger **62***d* and small finger **62***e* so that the A button **42** can be operated by the index finger **62***b* and the A2 button **32** by the middle finger **62***c*, respectively.

[0093] As stated above, the controller **10** of this embodiment, under the state of being held by one hand, allows the first operating portion (the direction switch **26** in the embodiment) and the second operating portion (the A button **42** in the embodiment) to be easily operated. That is, the controller **10**

of this embodiment makes it possible to operate each of the operating portions with stability while holding the controller **10** by one hand. Therefore, the player can use the other hand for playing a game or for another purpose. Moreover, since it can be held only by one hand, the controller **10** can be handled more freely as compared with the case of holding by the both hands. As a consequence, it is possible to perform smoothly the carrying, movement or displacement of the controller **10**.

[0094] Additionally, in the controller **10** of this embodiment, the position of the first operating portion, for example, the direction switch **26** provided on the upper surface **20** of the housing **12** and the position of the second operating portion, e.g., the A button **42** provided on the lower surface of the housing **12** correspond to each other on the upper and lower surfaces **20** and **22** of the housing **12** so that the housing **12** can be caught by the thumb and the index finger (or middle finger) operating these portions, resulting in further stable operations. For example, when the direction switch **26** is operated by the thumb **62***a*, the housing **12** is supported from underneath by the index finger **62***b* or the middle finger **62***c* positioned in the concave portion **34** for operating the A button **42**, which makes it possible to push the direction switch **26** by the thumb **62***a* in a stable manner. Likewise, when the A button **42** is operated by the index finger **62***b* or the middle finger **62***c*, the housing **12** is supported from above by the thumb **62***a* for operating the direction switch **26**, which make it possible to push the A button **42** by the index finger **62***b* or the middle finger **62***c* with stability.

[0095] Furthermore, in this embodiment, the center of gravity G of the controller **10** falls a cross point of the width-direction center line C**1** and the longitudinal-direction center line C**2** shown in FIG. **2** (B) or a vicinity thereto. The position of the center of gravity G is contained in a range of the holding portion **18**, as can be seen well from FIG. **2**. Therefore, when the controller **10** is held at the holding portion **18**, the holding hand **62** (FIG. **6**) supports the position of the center of gravity G, which allows the holding state to be maintained with greatly high stability. Thus, it is possible to perform further smoothly the movement, carrying or displacement of the controller **10** for the imaging information arithmetic unit.

[0096] FIG. **3** shows a state that the index finger **62***b* presses the A button **42**. When it is not necessary to press the A button **42**, the index finger **62***b* may be moved off the A button **42** (the same applies to the middle finger **62***c*). That is, as shown in FIG. **5**, by pushing the index finger **62***b* (or the middle finger **62***c*) against the front-end inclined surface **40** of the concave portion **34**, it is possible to make the housing stable in the state that the A button **42** is released from the index finger **62***b* (the middle finger **62***c*). Consequently, it is not necessary to change the state of holding the housing **12** (change a holding manner), depending on whether to press the A button **42** or not.

[0097] FIG. **6** and FIG. **7** illustrate the state that the upper housing **16** is removed from the controller **10** and the state that the lower housing **14** is removed from the controller **10**, respectively. As shown in FIG. **6** indicating the removal of the upper housing **16**, a substrate **64** is attached to an upper end of the lower housing **14** in such a manner as to seal the upper opening of the lower housing **14**. The above described power switch **24**, direction switch **26**, start switch **30**, select switch **32**, X button **44** and Y button **46** are mounted on an upper main surface of the substrate **64**, and they are connected to a processor **66** (FIG. **8**) constituting a controller circuit by means of appropriate wiring (not shown).

[0098] Moreover, an acceleration sensor **68** and a wireless module **70** are assembled on the upper main surface of the substrate **64**, between the direction switch **26** and the X button **44**, for example, between the start switch **30** and the select switch **32**.

[0099] The acceleration sensor **68** is preferably a three-axis linear accelerometer that detects linear acceleration along each of an X axis, Y axis and Z axis. Alternatively, a two-axis linear accelerometer that only detects linear acceleration along each of an X axis and Y axis (or other pair of axes) may be used in another embodiment depending on the type of control signals desired. As a non-limiting example, the three-axis or two-axis linear accelerometer **68** may be of the type available from Analog Devices, Inc. or STMicroelectronics N.V. Preferably, the acceleration sensor **68** is an electrostatic capacitance or capacitance-coupling type that is based on silicon micro-machined MEMS (microelectromechanical systems) technology. However, any other suitable accelerometer technology (e.g., piezoelectric type or piezoresistance type) now existing or later developed may be used to provide the three-axis or two-axis acceleration sensor **68**.

[0100] As one skilled in the art understands, a linear accelerometer, such as acceleration sensor **68**, is only capable of detecting acceleration along a straight line corresponding to each axis of the acceleration sensor. In other words, the direct output of the acceleration sensor **68** is limited to signals indicative of linear acceleration (static or dynamic) along each of the two or three axes thereof. As a result, the acceleration sensor **68** cannot directly detect movement along a non-linear (e.g. arcuate) path, rotation, rotational movement, angular displacement, tilt, position, attitude or any other physical characteristic.

[0101] However, through additional processing of the linear acceleration signals output from the acceleration sensor **68**, additional information relating to the housing **12** can be inferred or calculated, as one skilled in the art will readily understand from the description herein. For example, by detecting static linear acceleration (i.e., gravity), the linear acceleration output of the acceleration sensor **68** can be used to infer tilt of the object relative to the gravity vector by correlating tilt angles with detected linear acceleration. In this way, the acceleration sensor **68** can be used in combination with the processor **66** (or another processor) to determine tilt, attitude or position of the housing **12**. Similarly, various movements and/or positions of the housing **12** can be calculated or inferred through processing of the linear acceleration signals generated by the acceleration sensor **68** when the housing **12** containing the acceleration sensor **68** is subjected to dynamic accelerations by, for example, the hand of a user. In another embodiment, the acceleration sensor **68** may include an embedded signal processor or other type of dedicated processor for performing any desired processing of the acceleration signals output from the accelerometers therein prior to outputting signals to processor **66**. For example, the embedded or dedicated processor could be used to convert the detected acceleration signal to a corresponding tilt angle when the acceleration sensor is intended to detect static acceleration (i.e., gravity).

[0102] In this embodiment, the acceleration sensor **68** and processor **66** function as a position and/or attitude determining means for determining the position and/or attitude of the controller **10** held by the player with his/her hand. By outputting information on the position and/or attitude through conversion of the acceleration signal output from the acceleration

sensor **68**, in addition to operation signals from the direction switch **26**, the A button **42**, etc. and obtaining operation signals for position or attitude at the game machine side, it is possible to perform game operations with a high degree of flexibility.

[0103] As stated above, by arranging the acceleration sensor **68** within the housing **12** so that the acceleration detected by acceleration sensor **68** can be used to determine the attitude and position of the housing **12**, i.e. the controller **10**, the player can easily change the position and attitude of the controller **10** by moving (turning) the wrist of his/her hand while holding the holding portion **18** of the housing **12** by that hand described above with reference to FIG. **3** to FIG. **5**, Therefore, according to the controller **10** of this embodiment, it is possible to utilize not only operation signals from the operating switches **24** to **32**, **44** and **46** of the controller **10** but also the position and attitude of the controller **10** as controller data, allowing further higher degrees of operations.

[0104] Moreover, the acceleration sensor **68** is provided within the housing **12** of the holding portion **18**, and in the course of nature, the thumb is placed on the direction switch **26** and the index finger is placed on the A button **42**, and the remaining fingers support the holding portion. Thus, no variations occur among individuals in the way to hold the controller **10**, which makes it possible to perform high-precision detection without variations under predetermined criteria. That is, the above mentioned turning operation of the wrist may result in a displacement of a rotational axis due to its rotation. Also, since right-handed rotation and left-handed rotation are asymmetrical, there is a possibility of causing an error. However, by providing the acceleration sensor **68** within the housing **12** of the holding portion **18** as in this embodiment, the displacement of the rotation axis due to its rotation is reduced with a decreased possibility of detection errors.

[0105] Additionally, in the embodiment, the acceleration sensor **68** is set up within a range of the holding portion **18** of the housing **12** (FIG. **1**). This brings about an advantage that the position and/or attitude determining means can determine the position and/or the attitude with high accuracy. Besides, the position and/or attitude determining means may be arranged at another position within the housing **12** according to the purpose. For example, as the position and/or attitude determining means is moved backward of the housing **12**, the amount of change in position and/or attitude due to the displacement of the housing **12** becomes smaller. On the contrary, as the means is moved forward of the housing **12**, the amount of change in position and/or attitude due to the displacement of the housing **12** becomes larger. Consequently, the position and/or attitude determining means may be arranged at the most appropriate position according to required performance.

[0106] In another exemplary embodiment, the acceleration sensor **68** may be replaced with a gyro-sensor of any suitable technology incorporating, for example, a rotating or vibrating element. Exemplary MEMS gyro-sensors that may be used in this embodiment are available from Analog Devices, Inc. Unlike the linear acceleration sensor **68**, a gyro-sensor is capable of directly detecting rotation (or angular rate) around an axis defined by the gyroscopic element (or elements) therein. Thus, due to the fundamental differences between a gyro-sensor and an linear acceleration sensor, corresponding changes need to be made to the processing operations that are performed on the output signals from these devices depending on which device is selected for a particular application. Due to the fact that the nature of gyroscopes is known to one skilled in the art, as well as the fundamental differences between linear accelerometers and gyroscopes, further details are not provided herein so as not to obscure the remainder of the disclosure. While gyro-sensors provide certain advantages due to their ability to directly detect rotational movement, linear acceleration sensors are generally more cost effective when used in connection with the controller applications described herein.

[0107] An antenna pattern **72** is formed on the upper main surface of the substrate **64**, and the controller **10** is provided as a wireless controller by the means of the antenna pattern **72** and the above mentioned wireless module **70**. More specifically, the operation signals from the above stated individual switches and buttons **24** to **32**, **44** and **46**, and the detection data (detection signal) from the imaging information arithmetic unit **54** and acceleration data (acceleration signal) from the acceleration sensor **68** are modulated in the wireless module **70** to weak radio wave signals, and the modulated weak radio wave signals are emitted from the antenna pattern **72**, Accordingly, the game machine (not shown), by receiving the weak radio waves and performing demodulation and decoding on them, can obtain the operation signals from the above stated individual switches and buttons **24** to **32**, **44** and **46**, and the detection data from the imaging information arithmetic unit **54** and the detected acceleration data from the acceleration sensor **68**. Then, the game machine makes the game progress, based on the signals, data and game programs obtained in such a manner.

[0108] In addition, a crystal oscillator **74** provided on the upper main surface of the substrate **64** is intended to generate a basic clock of a computer or processor **66** (FIG. **8**) contained in the controller **10**.

[0109] As shown in FIG. **7** in which the lower housing **14** is removed, the imaging information arithmetic unit **54** is attached to an edge of the front end on the lower main surface of the substrate **64**, and the connector **60** is attached to an edge of the rear end thereof. The imaging information arithmetic unit **54** has the above mentioned infrared imaging device **56** and an image processing circuit **76** for processing image data imaged by the imaging device (imaging means) **56**.

[0110] Additionally, the above described A button **42** is attached to the lower main surface of the substrate **64** backward of the imaging information arithmetic unit **54**, and the aforesaid battery **78** is stored further backward thereof. A vibrator **80** is attached to the lower main surface of the substrate **64**, between the battery **78** and the connector **60**. The vibrator **80** may be a vibrating motor or solenoid, for example. The vibrator **80** creates vibrations in the controller **10**, and the vibrations are transmitted to the player's hand **62** (FIG. **3**) holding it, which realizes a vibration-ready game. Consequently, it is possible to provide the player with a vibratory stimulus.

[0111] Besides, as stated above, arranging the vibrator **80** on the opposite side of the imaging information arithmetic unit **54** in the longitudinal direction of the housing **12** would decrease the possibility that the vibrations from the vibrator **80** affect adversely imaging by the imaging information arithmetic unit **54**. That is, a longest distance can be secured between the vibrator **80** and the imaging information arithmetic unit **54**, which makes it possible to prevent the imaging element of the imaging information arithmetic unit **54** from being blurred as much as possible.

[0112] Besides, in changing the direction of imaging with the imaging means or imaging device **56**, the player may hold the holding portion **18** of the housing **12** by one hand and move the wrist of the hand in that state, as already described with reference to FIG. **3** to FIG. **5**. At that time, the imaging means **56** is provided at the front end of the housing **12**, the thumb is placed on the direction switch **26** and the index finger is placed on the A button **42** in the course of nature, and the remaining fingers support the holding portion. This makes it possible to perform an imaging operation under predetermined uniform criteria, independent of variations among individuals in the way to hold the controller **10**.

[0113] Here, referring to FIG. **8**, a description is given as to electric circuit structure of the controller **10** of the embodiment.

[0114] The imaging information arithmetic unit **54** has the infrared imaging device **56** and the aforesaid image processing circuit **76** for processing image data imaged by the imaging device **56**. As illustrated, the imaging device **56** includes a solid imaging element **561** such as a CMOS sensor and a CCD. An infrared filter (a filter permeable to infrared rays only) **562** and a lens **563** are arranged frontward of the imaging element **561**. Accordingly, the imaging device **56** generates image data through detection of infrared rays alone. In addition, the image processing circuit **76** processes the infrared image data obtained from the imaging device **56**, senses a high-intensity portion, detects the portion's center-of-gravity position and area, and outputs the data on them. The data on the position and area of the high-intensity portion is input from the image processing circuit **76** to the processor **66**. Moreover, the operation signals from the aforementioned switches and buttons **24** to **32**, **4** and **46** are input into the processor **66**. In addition, the three-axis or two-axis acceleration data (acceleration signal) from the acceleration sensor **68** is also input into the processor **66**.

[0115] Based on the operation signals from the operating switches **24** to **32**, **44** and **46**, the processor **66** detects which one of the operating switches and operating buttons is being operated from time to time. The operation data is output as a sequence of controller data together with the acceleration data and the high-intensity portion data, and is input into the wireless module **70**. The wireless module **70** modulates a carrier wave of predetermined frequency with the controller data, and emits the weak radio wave signal from the antenna **72**.

[0116] Besides, the signals and data input through the connector **60** provided at the rear end of the controller **10** are also input into the processor **66**, and processed by the processor **66** as with the aforementioned signals and data, provided as controller data to the wireless module **70**, and then output as a weak radio wave signal from the controller **10** in the same manner.

[0117] Additionally, the processor **66** may be independent from the wireless module **70**, and, in using a wireless module based on Bluetooth (registered trademark) standard, etc., it may be contained as a microcomputer in the module.

[0118] In order to play a game using the controller **10** in a game system **100**, a player **102** holds the controller **10** (the housing thereof) by one hand **62**, as shown in FIG. **9**. Then, the player **102** faces the imaging device **56** (FIG. **8**) of the aforementioned imaging information arithmetic unit **54** at the front end of the controller **10** toward a screen **106** of a display **104**. At that time, two LED modules **108**A and **108**B are set up in a vicinity of the screen **106** of the display **104**. Each of the LED modules **108**A and **108**B outputs infrared rays. Meanwhile, the infrared filter **562** (FIG. **8**) is incorporated into the imaging information arithmetic unit **54** of the controller **10** held by the player, as described above.

[0119] The image processing circuit **76** (FIG. **8**) of the imaging information arithmetic unit **54** obtains information on the positions and areas of the LED modules **108**A and **108**B as high-intensity point information, by processing the taken image containing the infrared rays. Data on the positions and magnitudes of the intensity points is transmitted from the controller **10** to a game machine **112** by radio (weak radio waves), and received by the game machine **112**. When the player moves the controller **10**, i.e. the imaging information arithmetic unit **54**, the data on the intensity point positions and magnitudes is changed. By taking advantage of this, the game machine **112** can obtain an operation signal corresponding to the movement of the controller and make the game progress according to that.

[0120] In this manner, the imaging information arithmetic unit **54** can image a marker (an infrared light from the LED in the embodiment) and obtain an operation signal according to a change in the position of the marker in the taken image. This allows coordinate direct input and rotational input to the screen, unlike operations with the operating switches, operating keys or operating buttons which are manipulated with fingers. However, the principle of the imaging information arithmetic unit is well known as described in Japanese Patent No. 3422383, and thus a more detailed explanation on it is omitted here. Besides, motion tracking means an analysis of the movement of an object or camera (the controller **10** here) with a specific mark or pattern as a target in the screen (image).

[0121] FIG. **10** is a schematic view of the controller **10** illustrated in detail in FIG. **1** and FIG. **2**, for example. As depicted in FIG. **10**, the holding portion **18** is set up near a one end of the longitudinal direction of the housing **12** of the controller **10**, that is, a one end of the direction along the width-direction center line C**1**, and the imaging device **56** is installed at the other end of the housing **12**, on the center line C**1** and on the opposite side of the holding portion **18**. Accordingly, as shown in FIG. **3**, a straight line (the width-direction center line C**1**) passing through the palm **62**P of the hand **62** holding the holding portion **18** is in alignment with the direction of designation by the imaging device **56**, which brings about an advantage that it is easy to recognize the direction in which the imaging device **56** is faced. More specifically, since the direction of imaging by the imaging device **56** (corresponding to a direction in which a viewing angle C described later is faced) is in parallel with the longitudinal direction of the housing **12**, it is possible to grasp the direction of designation by the imaging device **56** through intuition while holding the housing **12**. Here, the longitudinal direction of the housing **12**, in the case of a rectangular housing as with the embodiment, is represented by the width-direction center line C**1**, for example. In addition, when the thumb is placed in the center of the direction switch **26**, for example, and the holding portion **18** is held by the palm and the other fingers as shown in FIG. **29** described later, the direction of imaging by the imaging device **56** denotes a direction in which the thumb is faced.

[0122] Besides, the LED modules **108**A and **108**B shown in FIG. **9** and the imaging information arithmetic unit **54** of the controller **10** have viewing angles A, B and C, respectively. In the embodiment, the viewing angles A and B are equal to each

other and they are 34° (half-value angle), for example, and the viewing angle C is 41°, for example. Additionally, in tracking operation, when the two LED modules **108**A and **108**B exist within the viewing angle C of the imaging device **56** as shown in FIG. **10**, the imaging information arithmetic unit **54** detects the movements of the imaging information arithmetic unit **54**, i.e. the controller **10**, by using the information on the positions and magnitudes of high-intensity points from the two LED modules **108**A and **108**B.

[0123] However, when only one LED module **108**A or **108**B exists within the viewing angle C of the imaging device **56** as shown in FIG. **11**, the imaging information arithmetic unit **54** detects the movement of the controller **10** by using the information on the position and magnitude of high-intensity point from only one of the two LED modules **108**A and **108**B.

[0124] The above described controller **10** sufficiently carries out the functions as a game operating device by itself. Furthermore, as in an embodiment described below, it is possible to make the controller **10** cooperate with another controller (or an adapter).

[0125] In the embodiment represented in FIG. **13** to FIG. **17**, a second controller **200** shown in FIG. **13** and the first controller **10** of the embodiment described earlier are employed. More specifically, the second controller **200** includes a transverse housing **202**, unlike the longitudinal housing **12** of the first controller **10**. Left and right sides of the transverse housing **202** function as holding portions **204** and **206**, respectively. The holding portion **204** is wrapped and held by the palm of the left hand **63**, and the holding portion **206** is wrapped and held by the palm of the right hand **62**, as illustrated in FIG. **16**. That is, the holding portion **204** is a left-hand holding portion and the holding portion **206** is a right-hand holding portion. The same thing applies to a different embodiment of FIG. **18** to FIG. **20**. In addition, a surface of the holding portion **204** and a surface of the holding portion **206** are located in the same plane, and form together an upper surface **203** of the housing **202** shown in FIG. **14** and FIG. **15**.

[0126] A receiving portion **208** is formed between the left-hand holding portion **204** and right-hand holding portion **205** of the housing **202**. The receiving portion **208** is a concave portion for accepting the housing **12** of the first controller **10**. The receiving portion **208** has a shape with opened front surface and upper surface, and its inner shape is similar to the outer shape of the housing **12** (FIG. **2** (E)) in a direction orthogonal to the longitudinal direction of the first controller **10**, and is slightly larger in dimensions than the same. More specifically, a width Wa of the receiving portion **208** is equal to or slightly larger than the width W of the housing **12** of the first controller **10** shown in FIG. **2** (D), and a depth D1 of the same is almost equal to the thickness T of the housing **12** (FIG. **2** (A) and (E)). However, a length D2 of depth of the same is set in correspondence with the length of the holding portion **18** of the housing **12** of the first controller **10** clearly illustrated in FIG. **1**, for example. That is, the depth D2 of the receiving portion **208** is equal to or slightly longer than or slightly shorter than the length of the holding portion **18** of the first controller **10** (in the longitudinal direction of the first controller).

[0127] Additionally, although not illustrated with precision, a connector **210** to be connected with the connector **56** provided to the first controller **10** is arranged in a back of the receiving portion **208**. Since the connector **56** of the first controller **10** is a male connector, the connector **210** of the second controller **200** is a female connector.

[0128] A well-known analog joystick **212** and direction switch (digital joystick) **214** are arranged on the upper surface of the left-hand holding portion **204** of the housing **202** of the second controller **200**. Also, an A button **216** and B button **218** are provided on the upper surface of the right-hand holding portion **206**, and an X button **220** and Y button **222** are provided so as to surround the slightly larger A button **216**. Moreover, a joystick **224** is provided for changing a position, i.e. view point of a virtual camera while a three-dimensional game image is displayed in the display screen **106** (FIG. **9**). The functions and actions of the A button **216** and B button **218** are the same as those of the A button **42** and B button **28** of the first controller **10**. The X button **220** is used to change an angle of gaze around an X axis of the virtual camera, for example, and the Y button **222** is used for changing an angle of gaze around the Y axis, for example.

[0129] The housing **12** of the first controller **10** is inserted from its other end (rear end) thereof into the opening of the front surface of the receiving portion **208** of the second controller **200**. Then, the housing **12** is pushed into until the connector **56** of the first controller **10** is connected to the connector **210** of the receiving portion **208**. By doing that, the first controller **10** is combined with the second controller **200**, as shown in FIG. **14**.

[0130] In the state of a combination of the first controller **10** and the second controller **200**, the holding portion **18** of the first controller **10** is almost buried in the receiving portion **208**, as can be seen well from FIG. **14** and FIG. **15** in particular. This is because the depth of the receiving portion **208** is set as to be equal to or slightly longer than or slightly shorter than the length of the holding portion **18**. Accordingly, the center of gravity of the first controller **10** is supported by the second controller **200**, and thus the first controller **10** can be stably supported by the second controller **200**.

[0131] Moreover, the width of the receiving portion **208** is set as to be equal to or slightly longer than the width of the housing **12** of the first controller **10**, and the depth of the same is formed so as to be equal to or slightly longer than the thickness of the housing **12**. Thus, when the first controller **10** is inserted into or attached to the receiving portion **208** of the second controller **200**, no rattle occurs between the first controller **10** and the second controller **200**. In addition, as can be well understood from FIG. **15**, the upper surface **20** of the housing **12** of the first controller **10** is flush with the upper surface **203** of the housing **202** of the second controller **200**, and thus the first controller **10** never protrudes from the surface of the second controller **200** or interferes with the operation of the second controller **200**.

[0132] When the first controller **10** and the second controller **200** are combined to each other, the player holds the holding portions **204** and **206** of the housing **202** of the second controller **200** by the left hand **63** and the right hand **62**, respectively, as shown in FIG. **16**. In that state, there is no need for using all the operating switches and buttons of the first controller **10** but a few of them. However, the wireless transmission function of the firs controller **10** and the function of the imaging information arithmetic unit can be used as they are.

[0133] When the first and second controllers **10** and **200** are combined with each other as shown in FIG. **14** and FIG. **15**, the electric circuit structure is as shown in FIG. **17**. More specifically, in FIG. **17**, the operating switches **212** to **224** are

the operating switches and buttons of the second controller **200**, and operation signals from these operating switches **212** to **224** are input from the connector **210** through the connector **56** into the processor **66** of the first controller **10**. Accordingly, the processor **66** processes the operation signal from the second controller **200** in the same manner as the operating signals from the first controller **10**, and inputs them as controller data into the wireless module **70**. Therefore, the operating signals from the individual switches and buttons **212** to **24** of the second controller **200** can be wirelessly transmitted as controller data via weak radio waves from the wires module **70** through the antenna **72**. As a consequence, the combination of the first controller **10** and second controller **200** functions as a wireless controller.

[0134] In addition, the imaging information arithmetic unit **54** of the first controller **10** is never affected by the combination of the first controller **10** and the second controller **200**. Thus, by displacing the housing **202** of the second controller **200** held by both hands as shown in FIG. **16** from side to side or up and down, it is possible to play a game with the use of the function of the imaging information arithmetic unit of the first controller **10**.

[0135] Besides, in the state where the first controller **10** and the second controller **200** are combined with each other, the first operating portion is typically the aforesaid direction switch **26** of the first controller **10**, and the second operating portion is the A button **42** in the same sense. The third operating portion is the joystick **212** and the direction switch **214** provided in the left-hand holding portion **204** of the second controller **200**. The fourth operating portion is the A button **216**, etc. provided in the right-hand holding portion **206** of the second controller **200**. However, the correspondences of the third operating portion and the fourth operating portion may be exchanged. In either case, the third operating portion and the fourth operating portion can be operated by the thumb **63** a of the left hand **63** and the thumb **62***a* of the right hand **62**, as shown in FIG. **16**.

[0136] As described above, in the first controller **10**, the first operating portion (the direction switch **26**) is arranged at a position that can be operated by the thumb **62**, and the second operating portion (the A button **42**) is arranged at a position that can be operated by the index finger **62***b* or the middle finger **62***c* when the first controller **10** is held at the holding portion **18**. Thus, in the first controller **10**, it is a little hard to operate the X button **44** and the Y button **46** provided within a range of the holding portion **18**. On the contrary, in the second controller **200**, the X button **220** and the Y button **222** are both provided in the right-hand holding portion **206** of the housing **202** and are easy to operate by the thumb **62***a* in the state that the holding portion **206** is held by the right hand **62** (FIG. **16**).

[0137] As stated above, it is possible to make the one-handed first controller **10** easier to operate by one hand by arranging a minimum required number of operating switches or keys therein. However, the aforementioned X button **44** and Y button **46**, for example, may need to be operated with considerable frequency depending on the kind of a game. In the first controller **10**, the X button **44** and the Y button **46** are not necessarily easy to operate because they are provided in the range of the holding portion **18**. That is, the player may be dissatisfied with the first controller **10** alone due to difficulty of operating the X button **44** and the Y button **46**. In this case, by combining the second controller **200** and the first controller **10**, it is possible to prevent the player from having such dissatisfaction because the X button **220** and the Y button **222** of the second controller **200** are easy to operate.

[0138] In addition, the joystick **212** and the direction switch **214** are arranged as direction designation means in the second controller **200** as well. Meanwhile, the joystick **212** and the direction switch **214** are provided in the left-hand holding portion **204** of the housing **202** and easy to operate by the thumb **63***a* in the state that the holding portion **204** is held by the left hand **63** (FIG. **16**). Accordingly, when the first and second controllers **10** and **200** are combined with each other, the direction designation means also becomes easy to operate. Moreover, the direction switch **26** is originally provided in the first controller **10** at an easy-to-operate position, the direction designation means to be used with a relatively high frequency has easy operability in both the cases of the first controller **10** is used singly and in combination with the second controller **200**.

[0139] Besides, in the embodiment of FIG. **13** to FIG. **17**, the A button **216**, the B button **218**, the X button **220** and the Y button **222** are arranged in the right-hand holding portion **206** of the second controller **200**. Alternatively, in the case of this embodiment, it is possible to eliminate the A button **216** and the B button **218** from the second controller **200** so that only the X button **220** and the Y button **222** are arranged in the second controller **200**.

[0140] That is, even when the first controller **10** and the second controller **200** are combined with each other, the A button **42** and the B button **28** (FIG. **1**) can be operated without hindrance, and thus it is possible to eliminate some operating switch(es) and operating button(s) with duplicate functions from the second controller **200**, resulting in cost reduction. On the other hand, the X button **44** and the Y button **46** of the first controller **10** becomes hard in some degree to operate at the time of the controller combination, and the functions of these buttons are covered by the operating switches (buttons) separately provided in the second controller **200**. This would eliminate the inconvenience of operation resulting from the controller combination.

[0141] An embodiment shown in FIG. **18** is the same as the embodiment shown in FIG. **13** to FIG. **17** except that the operating switches provided on upper surface of the right-hand holding portion **206** of the housing **202** of the second controller **200** are slightly different from those of the embodiment shown in FIG. **13** to FIG. **16**. A duplicate description is omitted below, with assignment of the same reference numerals to similar operating switches or operating buttons. In the embodiment of FIG. **18**, provided on the upper surface of the right-hand holding portion **206** of the housing **202** are the A button **216**, the B button **218**, the X button **220**, the Y button **222**, a C button **226**, and a D button **228**. The A button **216** and the B button **218** have the same functions as those of the A button **216** and the B button of the above described embodiment. The X button **220**, the Y button **222**, the C button **226** and the D button **228** realize the equivalent functions of the joystick **224** of the preceding embodiments.

[0142] Besides, in the embodiment of FIG. **18**, the A button **216** and the B button **218** may be eliminated from the right-hand holding portion **206** of the second controller **200** so that only the X button **220** and the Y button **222** are arranged in the second controller **200**, as in the case of the embodiment of FIG. **13** to FIG. **17**. This makes it possible to achieve cost reduction and prevent a decrease in operability at the time of the controller combination.

[0143] An embodiment of FIG. **19** is identical with the embodiment of FIG. **13** to FIG. **17** and the embodiment of FIG. **18** except for a point described below. Specifically, in both the embodiment of FIG. **13** to FIG. **16** and the embodiment of FIG. **18**, the housing **202** has a sufficient width (in the longitudinal direction of the first controller **10**) and thus the holding portion **18** of the first controller **10** is almost buried in the housing **202** of the second controller **200**. On the contrary, in the embodiment of FIG. **19**, the width of the housing **202** is slightly smaller as compared with the embodiment of FIG. **13** to FIG. **16** and the embodiment of FIG. **18**, most part of the holding portion **18** of the first controller **10** is exposed from the housing **202**. Accordingly, this embodiment is slightly unstable as compared with the preceding embodiments. However, the upper surfaces **20** and **203** of the respective housings **12** and **202** of the first controller **10** and second controller **200** are flush with each other as in the cases of the preceding embodiments.

[0144] Since the width of the housing **202** is slightly shorter, the joystick **212** provided in the left-hand holding portion **204** of the housing **202** of FIG. **18** embodiment is omitted and some changes are made to the switches of the right-hand holding portion **206** in this embodiment. In this embodiment, only the A button **216**, the B button **218**, the X button **220** and the Y button **222** are arranged in the right-hand holding portion **206**.

[0145] Besides, in the embodiment of FIG. **19**, the A button **216** and the B button **218** of the right-hand holding portion **206** of the second controller **200** may be eliminated so that only the X button **220** and the Y button **222** are arranged in the second controller **200**, as in the case of the embodiment of FIG. **13** to FIG. **17**. This makes it possible to achieve cost reduction and prevent a decrease in operability with the controller combination.

[0146] An embodiment of FIG. **20** is the same as the embodiment of FIG. **19** except for a point described below. Specifically, as with the FIG. **19** embodiment, the holding portion **18** of the first controller **10** protrudes or is exposed longer from the housing **202** of the second controller **200** as compared with the embodiment of FIG. **13** to FIG. **16** and the embodiment of FIG. **18**. Thus, also in this embodiment, only the A button **216** and the B button **218** are provided in the right-hand holding portion **206** of the housing **202**. Alternatively, these buttons **216** and **218** may function as X button and Y button, not as A button and B button.

[0147] Shown in FIG. **21** is a gun-type adapter **300**. The adapter **300** has a butt **302** for holding by hand, as with general gun-type controllers. The butt **302** is provided with a trigger **306** surrounded by a trigger guard **304**. A gun barrel **308** extends from the butt **302** through a magazine. Besides, the gun barrel **308** can be detached by a connector **310** with respect to the butt **302**.

[0148] In addition, by pulling out the gun barrel **308** from the connector **310** and inserting the connector **60** of the controller **10** into a connector **310**, the first controller **10** can be attached instead of the gun barrel **308**. In this case, it is possible to make the shooting game more interesting by allowing the trigger **306** to be used in place of the A button **42** of the controller **10**.

[0149] In the first controller **10** of an embodiment shown in FIG. **23**, the operating switches and buttons **24** to **32**, **44** and **46** are changed in shape and layout as compared with the embodiment of FIG. **1**. The direction switch **26**, in particular, employs not the combined switch of FIG. **1** embodiment but a direction switch formed of a cross key frequently used in game machines. The cross key, i.e. the direction switch **26** may be identical with the direction switch **214** of the second controller **200**. Also, in the first controller **10** of this embodiment, the start switch **30** and the select switch **32** are arranged in a sideway line, not arranged in the shape of the character "/a" as with the preceding embodiments.

[0150] Moreover, a plurality of (four in this embodiment) light-emitting diodes (LEDs) **821**, **822**, **823** and **824** are provided at one end (front end) of the upper surface **20** of the controller **10** of this embodiment,. Light from the LEDs **821** to **824** can be visually recognized from outside, but they are buried in the upper surface **20** of the housing **12** and thus do not appear to protrude in FIG. **23** (B). Alternatively, it is absolutely acceptable that they are arranged so as to appear to protrude. When the first controller **10** transmits a radio wave signal as a controller signal (controller data), these LEDs **821** to **824** indicate the number of the controller because the LED corresponding to the controller number is turned on.

[0151] For example, when the game machine **112** shown in FIG. **9** is designed to accept four controllers at a time, each of four game players uses the first controller **10**. The selective lighting of the LEDs **821** to **824** allows each of the users to ascertain which is his/her own controller, out of the first to fourth ones. When the LED **821** of his/her controller **10** is turned on, for instance, the player can understand that the controller is assigned as first controller.

[0152] Additionally, in the embodiment of FIG. **23**, the front-end surface **52** of the housing **10** is formed as an inclined surface, not a surface orthogonal to an axis along the longitudinal direction of the housing **12**, unlike the preceding embodiments. Also, the imaging device **56** of the imaging information arithmetic unit is attached to the inclined front-end surface, and thus a central axis in the imaging range of the imaging information arithmetic unit, i.e. the imaging device **56** crosses obliquely the axis along the longitudinal direction of the housing **12**. Accordingly, the housing **12** can be inclined on the whole by holding the housing **12** at the holding portion **18** and facing the inclined front-end surface **52**, i.e. the imaging device **56** straight toward the screen **106** of the display **104**. Consequently, according to this embodiment, the player may feel less tiredness on his/her hand in operating the controller **10** in his/her chair, for example.

[0153] That is, in the preceding embodiments, the front-end surface of the housing **12** is orthogonal to the axis along the longitudinal direction. Accordingly, in facing the imaging device **56** attached thereto straight toward the screen **106**, it is necessary to hold the controller **10** in such a manner that the upper surface **20** of the housing **12** is faced upward and that the axis is in a horizontal state. Also, in that state, the imaging device **56** needs to be brought to a place within the screen **106**. In that case, the wrist of the hand holding the holding portion **18** may be under too much tension. On the contrary, in the embodiment of FIG. **23**, the imaging device **56** can be faced straight toward the screen **106** even while holding the housing **12** by the wrist at a natural angle or in a natural state. This makes it possible to reduce the tiredness on the player's wrist without causing excessive stress on it.

[0154] Based on the same idea, as with an embodiment shown in FIG. **25**, a front end **12**H of the housing **12** of the controller **10** is separated from another part and is attached to a front end of the other part by means of a shaft **84**. By doing this, since the front end **12**H can be folded in such a manner as indicated by dotted lines if required, an imaging surface of

the imaging device **56** of the imaging information arithmetic unit is displaced according to that, as shown in FIG. **25**. Thus, as with the embodiments shown in FIG. **23** and FIG. **24**, the effect of reducing wrist tiredness can be expected. Besides, if this is not required for the embodiment of FIG. **25**, the front end **12**H may be in an upright state (a state indicated by solid lines in FIG. **25**) according to the axis along the longitudinal direction.

[0155] FIG. **26** to FIG. **28** represents still another embodiment of the first controller **10**. The controller **10** of this embodiment is identical with the controller of the embodiment shown in FIG. **1** and FIG. **2** except for points described below. Duplicate descriptions are omitted below with assignment of the same reference numerals to the same or similar components.

[0156] The controller **10** of this embodiment also includes the housing **12** of a longitudinal and cross rectangular shape or a shape close thereto that is structured by the lower housing **14** and the upper housing **16**. Also, the holding portion **18** of a size or thickness capable of being held by one hand is formed at the rear end of the housing **12**. In addition, the direction switch **26** is arranged on the upper surface **20** of the housing **12**, at the side (front end) opposite to the holding portion **18** in the longitudinal direction C**1** (FIG. **27**). Besides, in this embodiment, the direction switch **26** is a so-called cross key, not a combined switch such as that of the FIG. **1** embodiment. Additionally, the A button **42** is provided below (near the rear end) of the cross key, i.e. the direction switch **26**, at center of the housing **12** in a width direction. In the preceding embodiments, the A button **42** is provided in the concave portion **34** on the bottom surface **22** of the housing **12**, and in this embodiment, the A button **42** is changed so as to be arranged on the upper surface **20** of the housing **12**. This is intended to allow the A button **42** to be operated by the thumb quickly and reliably because the A button **42** is operated more frequently than the B button **28**, as can be well understood from FIG. **29** described later, for example. The direction switch **26** and the A button **42** correspond to the first operating portion in this embodiment. Accordingly, the direction switch **26** and the A button **42** are a key top pushed in a direction orthogonal to the first plane **20** and a push switch having contacts (not shown) operated by the key top.

[0157] Moreover, in this embodiment, as understood well from FIG. **27**(C) especially, a height H**1** from the first plane **20** of the key top of the cross switch, i.e. the direction switch **26** is made higher as compared with a height H**2** from the first plane **20** of the key top of the A button **42**. That is, the direction switch **26** is set to be higher than the A button **42**. This aims to prevent the A button **42** from being pushed by accident while the cross key, i.e. the direction switch **26** is operated.

[0158] The start switch **30** and the select switch **32** are arranged in one straight line in a direction orthogonal to the longitudinal direction (width direction), and also a menu switch **86** is provided between them. The menu switch **86** is used to select a menu item of a game to be executed by means of the controller **10** (for example, a one-person play mode, a match-up mode, etc.) and to switch the game mode instantly to the menu to be provided immediately after the startup of the game machine or the like. The center of the menu switch **86** is aligned with that of the A button **42** in the width direction of the housing **12**, and the start switch **30** and the select switch **32** are arranged at positions with uniform spacing at left and right from the menu switch **86** (i.e. the A button **42**).

[0159] With such a button layout as mentioned above, in manipulating the controller **10** with the right hand, for example, the player can operate the select switch **32** quickly just by sliding the thumb placed on the A button **42** without having to bending the thumb. Additionally, in the case of operation with the left hand, the start switch **30** is a switch suitable for a quick operation in the same manner. Accordingly, it is possible to perform a quick operation regardless of whether the user is right-handed or left-handed, by making a change to the assignments of the select switch **32** and the start switch **30** through the use of a software program or the like.

[0160] Besides, the menu switch **86** and the power switch **24** are provided in such a manner as to be caved in or buried in holes formed on the upper surface **20** of the housing **12** so that they are invisible from a side view as shown in FIG. **27** (C). These switches **24** and **86** are caved because, although they may be operated only on specific occasions such as the time of starting the game, operating these switches by accident during the game would cause some inconvenience such as data loss, and thus these switches are designed to be capable of being intentionally operated at the game start but incapable of being unconsciously operated during the game.

[0161] Furthermore, in the controller **10** of this embodiment, the LEDs **821** to **824** for indicating the controller numbers are provided as with the controller of FIG. **23**. However, the LEDs **821** to **824** of FIG. **23** embodiment are provided at one end (front end) of the housing **12**, whereas those of this embodiment are arranged at the other end (rear end) of the housing **12**.

[0162] The concave portion **34** is formed on the lower surface **22** of the housing, at a position approximately corresponding to the position of the above mentioned direction switch **26**, on the side opposite to the holding portion **18** in the longitudinal direction. In the preceding embodiments, the concave portion **34** has the valley **36** with a plane parallel to the first plane **20**, and in this embodiment, the concave portion **34** has no valley and includes the first inclined surface **38** and the second inclined part **40** that have gentle inclination. Also, the B button **28** is provided on the first inclined surface **38** extending in the direction of the holding portion **18**. In addition, the B button **28** is provided at a position corresponding to the direction switch **26** and the A button **42** forming the first operating portion. Besides, the corresponding position denotes a position where the B button **28** is arranged close to the direction switch **26** and the A button **42** when viewed through the upper surface of the housing **12**.

[0163] Besides, the A button is arranged on the lower surface of the housing in the preceding embodiments, whereas the A button **42** of this embodiment is arranged at a position easier to press as compared with the center switch of the preceding embodiments. Thus, this button is assumed to be the frequently-used A button and the switch on the lower surface **22** of the housing is assumed to be the B button, which makes button operations to be easier.

[0164] Additionally, in this embodiment, the B button **28** corresponds to the second operating portion. The B button **28** therefore has a key top to be pushed in a direction perpendicular to the inclined surface **38** but non-perpendicular to the first plane **20**, and a contact (not shown) turned on or off by the key top.

[0165] Moreover, in this embodiment, an angle of inclination of the second inclined surface **40** extending toward the front end **52** of the housing **12**, with respect to the first plane **20** is set as to be smaller than an angle of inclination of the first

inclined surface **38** with respect to the first plane **20**, as can be well understood from FIG. **26** and FIG. **27** (C). That is, the second inclined surface **40** has gentle inclination as compared with the first inclined surface **38**. In this manner, by making the second inclined surface **40** more gentle in inclination than the first inclined surface **38**, there are such advantages that it is easier to hold the controller with both hands as shown in FIG. **32** described later and it is possible to take the index finger properly off the B button **28** because the finger can be sufficiently moved in the direction of the takeoff.

[0166] Furthermore, as can be understood from FIG. **28**, because of a layout of the start switch **30**, the menu switch **86** and the select switch **32** arranged in one horizontal straight line, in this embodiment, the wireless module **70** is arranged on the right side of the housing **12** in the width direction. Also, the power switch **24** is provided on the left side of the housing **12** of the substrate **64** in the width direction, in contrast to the preceding embodiments, and the antenna pattern **72** is arranged at the front end on the right side of the substrate **64** in the width direction. As stated above, by arranging the antenna pattern **72** at the front end on the right side of the housing **12** in the width direction, there is such an advantage that, even in the case of holding with both hands as shown in FIG. **32**, the emission of weak radio waves from the antenna **72** is not affected by the hands holding the housing **12**, that is, the controller **10**. That is, the antenna pattern **72** is arranged on the side opposite to the hands holding the controller **10**, in the width direction of the housing **12**.

[0167] Besides, in the embodiment of FIG. **26** to FIG. **28**, the switch provided in the concave portion **34** on the lower surface of the housing **12** is the B button **28**. Alternatively, the B button **28** may be replaced with an operating means having the functions of the Z button. In addition, the Z button is used as a trigger switch in a shooting game, for example, and also operated on occasions when a non-player object is to be targeted by a player object (a so-called Z-targeting feature), etc.

[0168] FIG. **29** and FIG. **30** show the state that the controller **10** such structured as stated above is held by the game player's hand. Referring to these drawings, the palm **62**P and the balls of middle finger **62***c*, ring finger **62***d* and small finger **62***e* of the player's right hand **62** hold the holding portion **18** of the housing **12** in such a manner as to wrap the holding portion **18** lightly. In the state, the thumb **62***a* of the hand **62** is positioned on the direction switch **26**, and the index finger **62***b* is positioned in the concave portion **34** of the lower housing **14**. Specifically, the direction switch **26** is arranged at a position reached by the thumb **62***a* of the hand **62** holding the housing **12**, that is, at a position capable of being operated by the thumb **62***a*. The B button **28** is arranged at a position reached by the index finger **62***b* of the hand **62** holding the housing **12**, that is, at a position capable of being operated by the index finger **62***b*. Accordingly, the player can operate the direction switch **26** by the thumb **62***a* and operate the B button **28** by the index finger **62***b* while holding the housing **12** by the hand **62**. More specifically, the index finger **62***b* of the hand **62** is positioned in such a manner as to make contact with the surface of the second inclined surface **40** having gentle inclination in the front-end direction of the above stated concave portion **34** formed in the lower housing **14**. By bending the index finger **62***b* toward him/her (rightward in FIG. **29**) in that state, the user can push the key top of the B button **28** by the ball of the index finger **62***b* in a direction perpendicular to the near-side inclined surface **38** of the concave portion **34**. Additionally, in the case of this embodiment, the A button **42** is to be operated by the thumb **62***a* of the one hand **62** as with the direction switch **26**, as can be seen well from FIG. **29** in particular. That is, in this embodiment, the direction switch **26** is operated by extending the thumb **62***a* and the A button **42** is operated by bending the thumb **62***a*. As a consequence, both the direction switch **26** and the A button **42** are operated by the thumb **62***a*. Thus, the thumb **62***a* may also be placed in an operation-waiting state (rest state) on the A button **42**, not on the direction switch **26**.

[0169] FIG. **29** shows a state that the B button (or the Z button) **28** is pushed by the index finger **62***b*. When it is not required to push the B button **28**, the index finger **62***b* (or the middle finger **62***c*) may be taken off the B button **28**. More specifically, by placing the index finger **62***b* (or the middle finger **62***c*) on the second inclined surface **40** of the concave portion **34**, it is possible to make the index finger **62***b* (the middle finger **62***c*) stable in the state of being separated from the B button **28**. Thus, there is no need for changing the state of holding the housing **12** (passing the housing **12** from one hand to the other) depending on whether or not to push the B button (or Z button) **28**.

[0170] As described above, the controller **10** of this embodiment makes it easy to operate the first operating portion (the direction switch **26** and the A button **42** in the embodiment) and the second operating portion (the A button **42** in the embodiment) while holding the controller **10** by one hand. That is, in the controller **10** of this embodiment, it is possible to operate the individual operating portions in a stable manner while holding the controller **10** by one hand, which brings about a highly favorable effect of allowing the other hand to be used for playing a game or for another purpose, and which also makes it possible to perform operations in a state of holding by both hands. FIG. **32** shows the state of holding by both hands. Additionally, in this embodiment, the A button **42** is arranged at a place on the holding portion in vicinity of the direction switch **26**. Moreover, the B button **28** is arranged at the back of the area in which the direction switch **26** and the A button **42** are arranged (in other words, slightly rearward of the immediate back of the direction switch **26**), which makes it easy to operate the A button **42** and the B button by one hand in a stable manner. Furthermore, as stated above, since the direction switch **26** is in a higher position than the A button **42**, it is possible to make the A button hard to press by mistake.

[0171] In the case of holding by both hands, as shown in FIG. **32**, the front end of the housing **12** is held by the left hand **63**, and the rear end of the housing **12** is held by the right hand **62**. At that time, with commonality between the right hand and the left hand, the controller **10**, i.e. the housing **12** is held in such a manner that the upper surface **20** (FIG. **27**) is retained by the balls of the thumbs **62***a* and **63***a* and the bottom surface **22** (FIG. **27**) is supported by the sides of the index fingers **62***b* and **63***b*. Accordingly, the direction switch **26** and the A button **42** are operated by the ball of the thumb **63***a* of the left hand **63**, and the B button **28** (FIG. **26** and FIG. **27**) is operated by the tip of the index finger **63***b* of the left hand. Also, the X button **44** and the Y button **46** are operated by the thumb **62***a* of the right hand **62**.

[0172] However, in the case of holding by both hands, the manner in which the controller is held, and the hands and fingers to operate the individual operating switches and operating buttons are not limited to the example of FIG. **32**. Thus, for example, it is possible to operate the A button **42** by

reaching out the thumb **62***a* of the right hand **62** or the like. Besides, holding in such a manner as shown in FIG. **32** would prevent radio emission through the antenna **72** (FIG. **28**) from being affected by the holding hand.

[0173] Although the present invention has been described and illustrated in detail, it is clearly understood that the same is by way of illustration and example only and is not to be taken by way of limitation, the spirit and scope of the present invention being limited only by the terms of the appended claims.

What is claimed is:

1. A game operating device, comprising:

a longitudinal housing having a size capable of being held by a hand;

a first operating portion provided on an upper surface of said housing, said first operating portion being provided at a position that said first operating portion can be operated by a thumb of said hand;

a second operating portion provided within a concave portion formed on a lower surface of said housing, said second operating portion being provided at a position that said second operating portion can be operated by an index finger of said hand in a state where said thumb of said hand is put on said first operating portion;

a holding portion formed on said housing, said holding portion being provided at a position that said holding portion can be held by a palm and other finger(s) of said hand in a state where said thumb and said index finger of said hand are respectively put on said first operating portion and said second operating portion; and

an imager provided at an end of said housing opposite to said holding portion.

2. A game operating device according to claim **1**, wherein said first operating portion includes a first plurality of key tops ranging along a longitudinal direction of said housing.

3. A game operating device according to claim **2**, wherein said first operating portion includes at least a key top of a direction designating switch and a key top of a first push button.

4. A game operating device according to claim **3**, wherein said second operating portion includes a key top of a second push button, said key top of said second push button being provided in a position correspondent to an interval between said key top of said direction designating switch and said key top of said first push button when viewing said both key tops from a lower surface of said housing.

5. A game operating device according to any one of claims **1** to **4** further comprising a key top of a third push button provided on said holding portion, said key top of said third push button being provided on said upper surface of said housing and at a position where said palm of said hand exists when said housing is held by said hand.

6. A game operating device according to claim **5**, further comprising a second plurality of key tops ranging in a direction intersecting said longitudinal direction between said key top of said third push button and said first operating portion.

* * * * *