Dec. 2, 1947. R. KAREY 2,431,806

OUTBOARD MOTOR

Original Filed Jan. 23, 1941 4 Sheets-Sheet 1

Fig. 1.

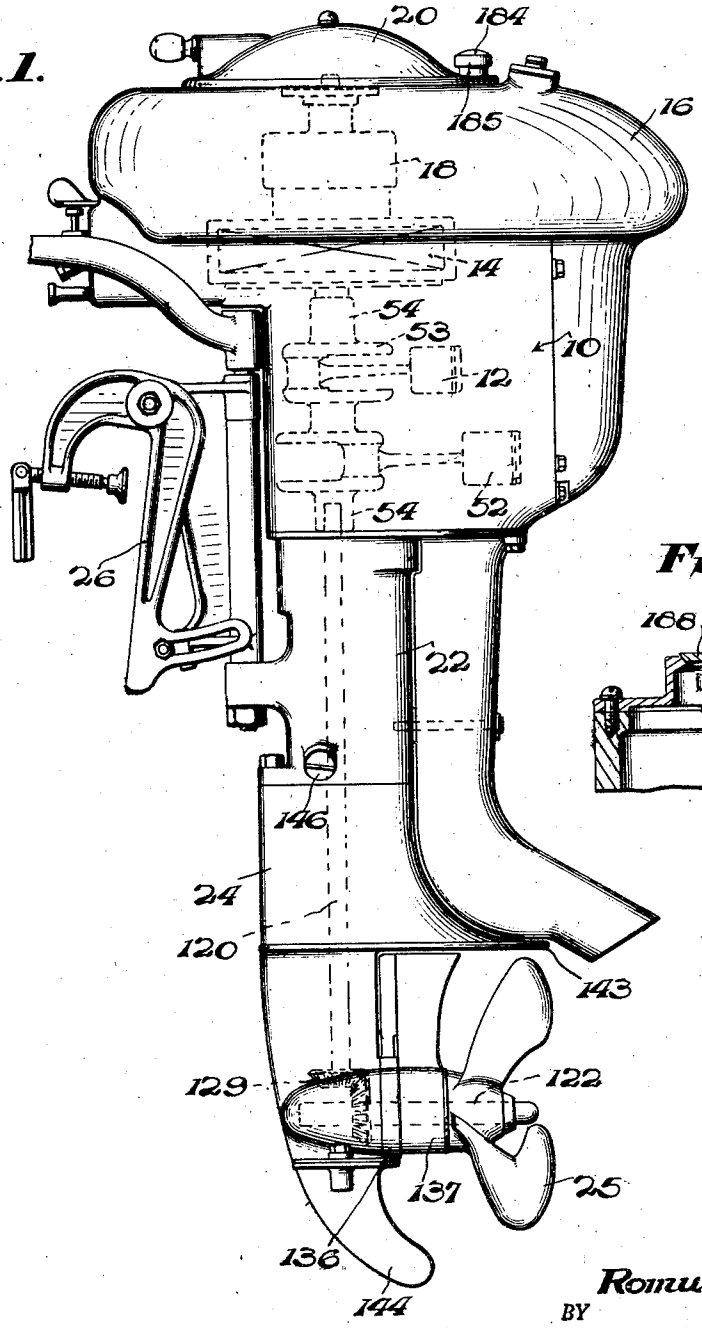


Fig. 7.

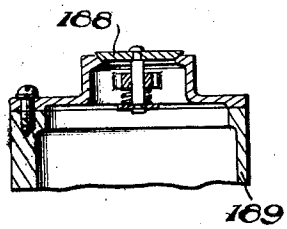


INVENTOR.
Romuald Karey.
BY
Roy O. Bateman
ATTORNEY

Dec. 2, 1947. R. KAREY 2,431,806

OUTBOARD MOTOR

Original Filed Jan. 23, 1941 4 Sheets-Sheet 2

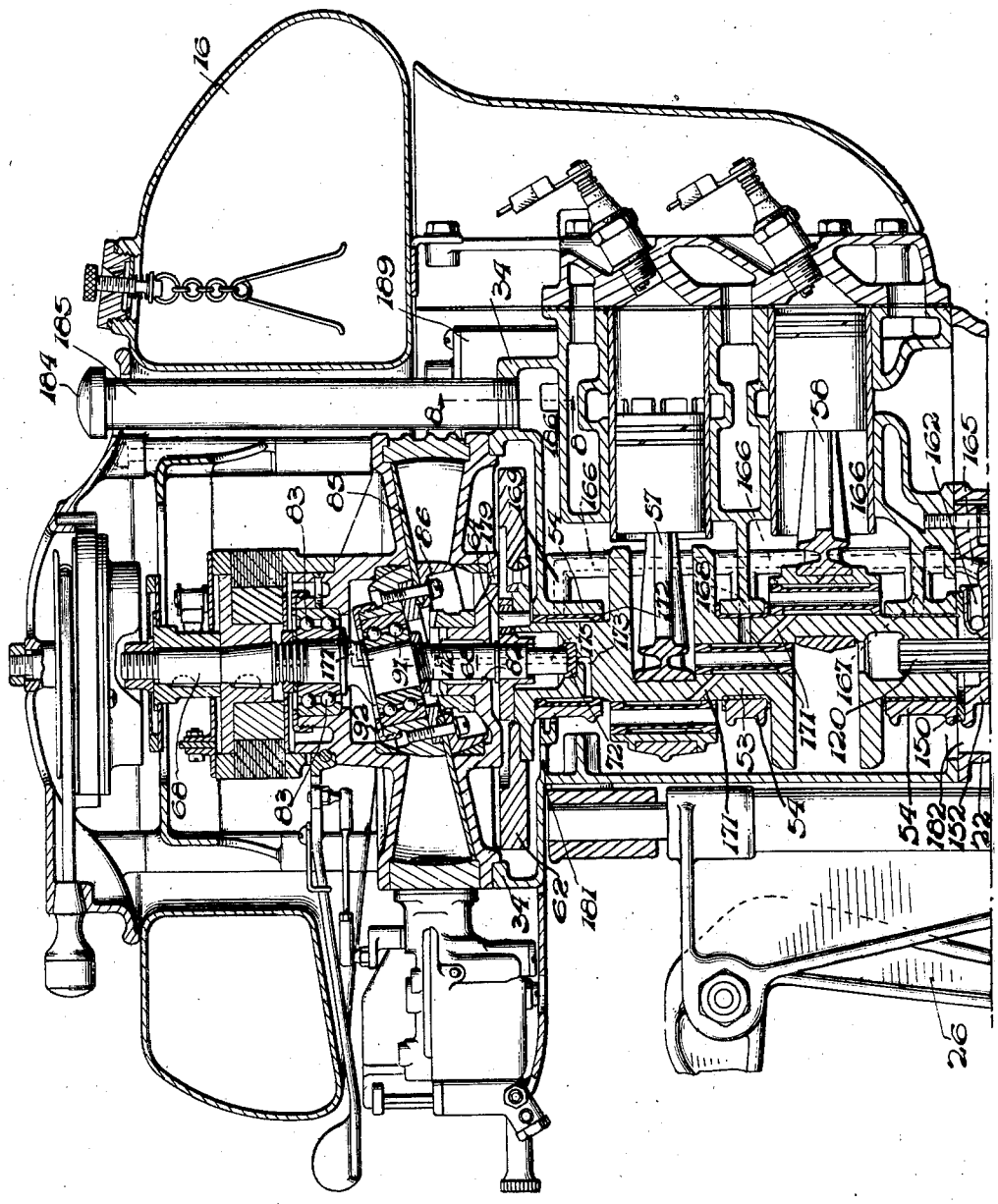


Fig. 2.

INVENTOR.
Romuald Karey.
BY
Roy O. Bateman
ATTORNEY

Dec. 2, 1947. R. KAREY 2,431,806

OUTBOARD MOTOR

Original Filed Jan. 23, 1941 4 Sheets-Sheet 3

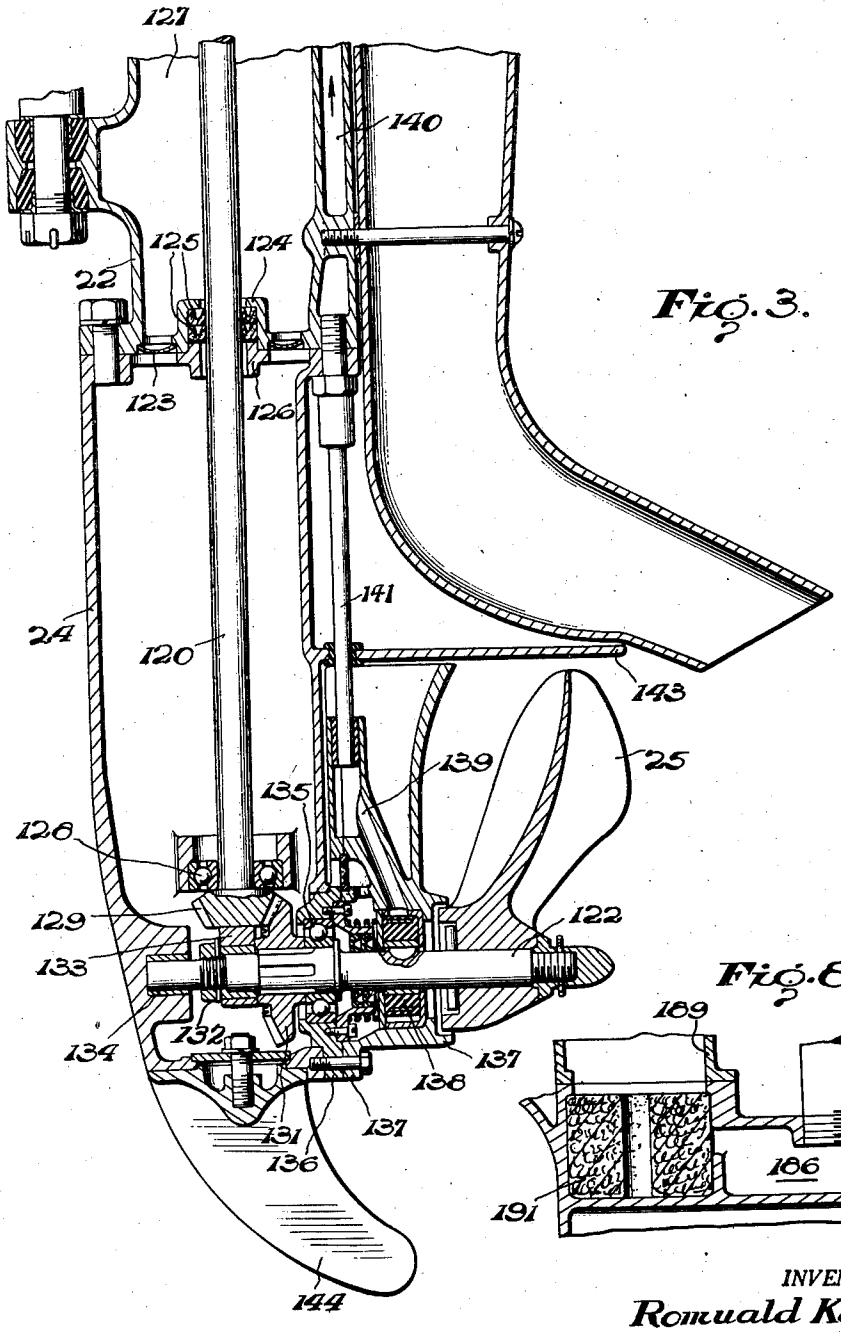


Fig. 3.




Fig. 8.

INVENTOR.
Romuald Karey.
BY
Roy O. Bateman
ATTORNEY

Dec. 2, 1947. R. KAREY 2,431,806

OUTBOARD MOTOR

Original Filed Jan. 23, 1941 4 Sheets-Sheet 4

Fig. 4.

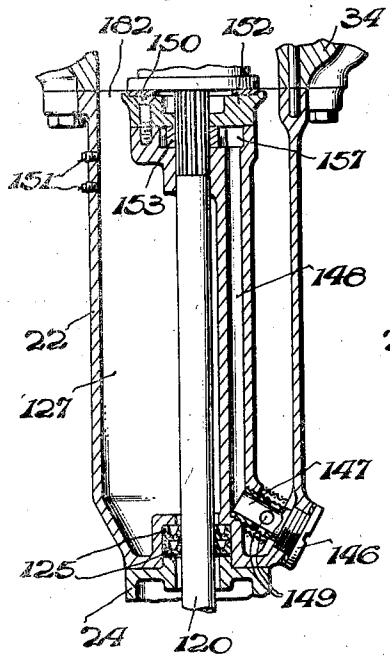


Fig. 5.

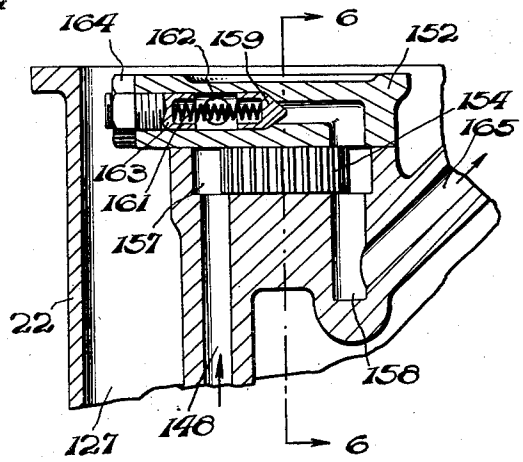


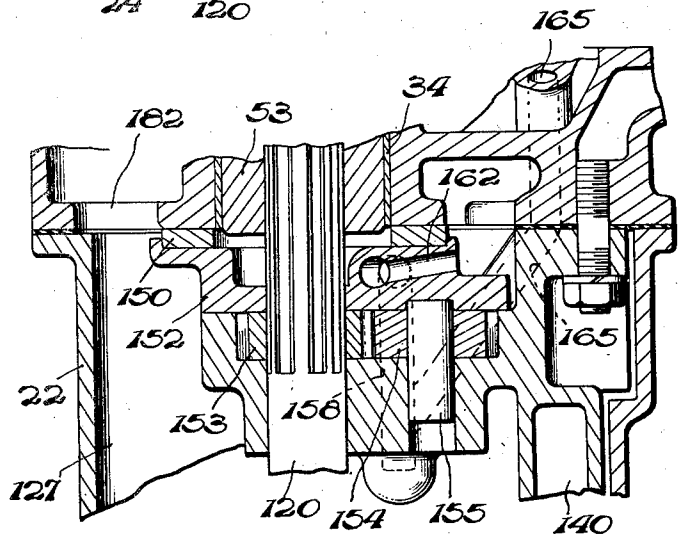


Fig. 6.

INVENTOR.
Romuald Karey.
BY
Roy D. Bateman
ATTORNEY

Patented Dec. 2, 1947

2,431,806

# UNITED STATES PATENT OFFICE

2,431,806

## OUTBOARD MOTOR

Romuald Karey, Baltimore, Md., assignor to Bendix Aviation Corporation, Brooklyn, N. Y., a corporation of Delaware

Application January 23, 1941, Serial No. 375,596, now Patent No. 2,351,050, dated June 13, 1944, which is a division of application Serial No. 267,218, April 11, 1939, now Patent No. 2,289,124, dated July 7, 1942. Divided and this application May 26, 1944, Serial No. 537,485

14 Claims. (Cl. 184—6)

1

This invention relates to power plants, and more particularly to apparatus for propelling a craft through water. The present application is a division of my copending application S. N. 375,596, filed January 23, 1941, for Outboard motor, now Patent No. 2,351,050, dated June 13, 1944. The latter is in turn a division of Patent No. 2,289,124, dated July 7, 1942, on application, Serial No. 267,218, filed April 11, 1939.

I have found that by dividing the vertical drive shaft housing of an outboard motor into two vertically spaced compartments, and utilizing the upper compartment as an oil reservoir and oil pump chamber, the length of the path over which the oil must travel to effect lubrication and be recirculated, may be materially shortened, and also the possibility of leaks developing in the oil line, and the suction load on the pump may be minimized. This also makes it possible to provide an efficient seal between the two compartments, which effectively prevents intermingling of the relatively light engine oil in the upper compartment, with the heavier waterproof greaselike lubricant in the lower compartment, which usually embodies large proportions of graphite. Locating the pump chamber and oil reservoir above the water level also makes it possible to achieve an underwater size and shape of housing which exerts a minimum resistance or "drag" upon the assembly in response to passage of the boat through the water.

It is accordingly the major object of this invention to provide an outboard motor embodying a novel oil pumping and circulating system which minimizes the length of the path over which the oil must be circulated; efficiently cools the lubricant; locates the pump above the water level, enabling efficient streamlining of the housing below the water to be carried out, yet does not impose excessive suction loads upon the pump.

A further important object is to provide an outboard motor of the type in which a pair of bevel gears transmit power from a vertical engine shaft to a horizontal propeller shaft, with a lubricating system including an oil reservoir and a pump which are located exteriorly of the gear chamber, whereby a different lubricant may be utilized for the gears and intermingling avoided of the respective lubricants.

Another object is to provide an outboard motor with novel engine and gear lubricating systems in which the gearing is located in a lower chamber and is lubricated by immersion in a comparatively heavy lubricant and an upper chamber, sealed from the lower chamber, contains a body of comparatively light lubricant and a pump for circulating it under pressure to the engine and engine accessories.

2

Further objects are to provide novel means for filtering the oil as it enters the suction side of the pump, and to improve and refine other subordinate features of outboard motor construction.

The above and further objects and novel features of the invention will more fully appear from the following description when the same is read in connection with the accompanying drawings. It is expressly understood, however, that the drawings are for the purpose of illustration only and are not intended to define the limits of the invention, reference being primarily had for this latter purpose to the appended claims.

In the drawings, wherein like reference characters refer to like parts throughout the several views,

Fig. 1 is a side elevation of an outboard motor embodying the present invention;

Fig. 2 is a sectional view on an enlarged scale of the power unit of Fig. 1;

Fig. 3 is a sectional view on an enlarged scale of the lower portion of the outboard motor of Fig. 1;

Fig. 4 is a sectional view of a portion of the motor of Fig. 1, showing the oil reservoir and the drive gear of the oil pump;

Fig. 5 is a sectional view taken substantially along a plane parallel to the plane of the section of Fig. 4 through the idler or driven gear of said pump;

Fig. 6 is a sectional view taken substantially on the line 6—6 of Fig. 5;

Fig. 7 is a fragmentary view in section of the crankcase pressure relief valve; and

Fig. 8 is a fragmental section view taken on the line 8—8 of Fig. 2 and showing the lower end of the oil filler pipe and the filter in the lower end of the pressure relief riser.

Referring more particularly to Fig. 1, it will be observed that the outboard motor includes a power head 10, having an internal combustion engine 12 which receives a combustible mixture from a supercharger 14. A fuel tank 16 is positioned to surround the supercharger 14, a magneto 18, and other elements of the engine structure. A rope starter rewind mechanism may, if desired, be housed within a cover plate 20.

Intermediate and lower units 22 and 24, respectively, are carried by the power head 10 to transmit power from the engine 12 to a propeller 25 to drive a boat to which the motor is attached by means of a boat engaging bracket 26.

Power from the engine 12 may be transmitted to the propeller 25 by means of a generally vertically disposed shaft 120 fixed to the crankshaft 53 of the engine and extending through the units 22 and 24 to drive a generally horizontally extending shaft 122 to which the propeller 25 is fixed. The lower end of housing section 22 is closed by plugs 123 and is provided with a flanged sleeve portion 124 containing a pair of lubricant seals 125 of any suitable construction, the latter cooperating with shaft 120 and being retained in place by an axially directed flange 126 carried by lower housing section 24. The foregoing structure prevents engine oil from leaking from the engine oil reservoir 127 formed by the lower end of housing section 22, and also prevents the engine oil from being contaminated by the heavy lubricant located in housing section 24.

The lower end of shaft 120 is journalled in a bearing 128 and carries a bevel gear 129 meshing with a bevel gear 131 splined on shaft 122 and retained in place by a combined nut and bushing member 132, the latter having a smooth portion journalled in an outboard bearing 133 formed on housing section 24. Shaft 122 is journalled in a sleeve bearing 134 in section 24 and in a ball bearing 135 carried by a bolted on section 136. Carried in a second bolted on section 137, and driven by an eccentric on shaft 122 is a water pump 138. The latter delivers water through a passage 139 and a conduit 141 and a passage 140 to the engine for cooling purposes in the manner disclosed in detail in the aforementioned parent application. The lower housing is also provided with an anti-cavitation plate 143 and a skeg 144. Upward flow of water through passage 140 exerts a highly desirable cooling action upon the oil in the reservoir.

Oil may be drained from chamber 127 through a drain opening closed by a plug 146. The latter is provided with a ported sleeve 147 communicating with an inlet passage 148 and carrying a screen 149 for filtering the oil prior to entry into passage 148. The oil level in the reservoir may be determined by removing a pair of test plugs 151.

Means, such for example, as a gear pump may be provided to supply oil, as a lubricant, from reservoir 127 and passage 148 to the engine 12 and to the supercharger 14. The upper end of the shaft 120 may be splined to couple it to the lower end of the crankshaft 53 and a gear 153 of the oil pump, the body of which is preferably integrally cast with section 22 and has a cover 152 secured thereto by screws or the like. Cover section 152 has a flat clamping surface on its upper side against which a combined spacer and gasket 150 tightly bears when the upper and intermediate housing sections are assembled, a downwardly directed clamping face on housing section 34 engaging the upper side of the spacer gasket. This materially strengthens the assembly. The gear 153 meshes with an idler gear 154 mounted on a pin 155 in the unit 22. Oil intake passage 148 communicates with pump intake chamber 157. By locating the axes of gears 153 and 154 in the fore and aft relationship shown, it is not necessary to increase the width or transverse dimension of the housing to accommodate them.

The pressure or discharge side of the pump communicates with a vertical passage 158 which communicates at its upper end with a pressure relief valve 159 which may be in the form of an adjustable spring-pressed plunger backed up by a spring 161 which is compressed to permit oil to return to the reservoir 127, by way of a duct 162 when the pressure developed by the pump exceeds a predetermined value. Spring 161 is backed up by a plug 163, which may be adjusted to provide the desired spring pressure and then locked in place by a nut 164. Passage 158 also communicates with an oil delivery duct 165.

Referring now to Fig. 2, duct 165 communicates with passageway 166 which, through connecting cross passages 167, 168, and 169 transmit oil to lubricate the main bearings 54 of the engine. The crankshaft 53, adjacent the center main bearing, is provided with interconnecting radial and angularly disposed passageways 171 which transmit oil to lubricate the bearings of connecting rods 57 and 58. Top passage 169 leads to an internally recessed bushing 172 communicating with a radial passageway 173 formed in the crankshaft 58 which in turn communicates through the apertured member 72 with a central duct 175 in the supercharger shaft 68 which transmits oil upwardly through central duct 175 and two side ducts 176 and 177 to lubricate the supercharger bearings 83, 91 and 82 and also the other moving parts of the supercharger including the member 85. A portion of the oil flowing downwardly lubricates ball portions 86 and the swash plate assembly, a drain passage 179 conveying the gravitating oil to the upper side of member 62 from which it is centrifugally thrown to the periphery of casing 34.

The excess oil supplied through cross duct 175 in the shaft 68, together with any oil draining from above, is drained from the supercharger through orifices 179 and the oil collecting in casing 34 is returned to the engine crank case through a port 181. The oil is returned to the oil reservoir 127 through an opening 182 in the bottom of the crank case.

The reservoir may be filled with oil by removing a cap 184 from an oil tube 185 and pouring oil therein. The tube 185 communicates with the crank case of the engine through a port 186, the crankcase in turn communicating with reservoir 127 through the opening 182. As previously pointed out, the pair of spaced plugs in the upper portion of the reservoir 127 enable the operator to readily ascertain the level of the oil in the reservoir. A spring loaded crank case pressure relief valve 188 may be provided to allow excess pressure within the crank case to be relieved. A riser 189 supports the pressure responsive valve 188 and is provided with a filter 191 to prevent the escape of oil from or the entrance of dirt into the crank case.

The engine cylinders and expansion chamber may be cooled by circulating water through passages adjacent their walls in the manner disclosed in detail in the parent application.

From the foregoing disclosure it is apparent that the invention provides an outboard motor having a vertical drive shaft housing divided into two vertically spaced compartments, in which the upper compartment is utilized as an oil reservoir and oil pump chamber and a gear pump is employed with the gear axes located in fore and aft relationship so as to enable streamlining of the housing to be carried out. This novel assembly minimizes the suction load on the pump and also materially shortens the path over which the oil must be circulated to effect lubrication and be returned to the reservoir, and also minimizes the possibility of leaks developing in the oil line.

The construction also makes it possible to provide an efficient seal between the two compart-

ments, thereby effectively preventing intermingling of the relatively light engine oil in the upper compartment, with the relatively heavy grease-like lubricant in the lower compartment. The oil reservoir and pump are also located above the water level which makes it possible to achieve an underwater size and shape of housing which exerts a minimum resistance or "drag" upon the assembly. The upward flow of cooling water through a passage having its walls disposed in heat-conductive relationship to the oil contained in the reservoir also functions to effectively cool the oil.

What is claimed is:

1. In an outboard motor having an engine; a propeller shaft; and a vertically extending drive shaft connecting said engine to said propeller shaft; a housing for containing said drive shaft, said housing being divided into two vertically spaced chambers, the chamber adjoining said engine constituting an oil reservoir; a gear pump having the driving gear thereof mounted on said drive shaft and the inlet passage thereof connected to said reservoir chamber; and means comprising a discharge passage for said pump, said discharge passage communicating with said engine.

2. In an outboard motor having an engine, a propeller shaft and a vertically extending drive shaft connecting said engine to said propeller shaft; a streamlined housing containing said drive shaft, said housing being divided into two vertically spaced chambers, the upper of said chambers constituting an oil reservoir; a pump drivably mounted on said drive shaft in said upper chamber, said pump having the inlet passage thereof connected to said chamber; and means comprising a discharge passage for said pump communicating with said engine, said means including a by-pass passage connecting with the reservoir and a pressure relief valve controlling the flow through said by-pass passage.

3. In an internal combustion engine of the character in which a substantially vertically disposed crankshaft and drive shaft assembly projects into a housing located below the crankcase of said engine, and a plurality of cylinders project to one side of said crankshaft, partition means in said housing dividing the same into an upper chamber and a lower chamber, said shaft projecting through said partition means; means for sealing said shaft and partition means against fluid leakage to provide a lubricant reservoir; a pump in said upper chamber operably connected to said shaft assembly; means for feeding lubricant from said pump to said engine; and means for returning spent lubricant from said crankcase to said upper chamber.

4. The internal combustion engine construction defined in claim 3, wherein said pump comprises a gear pump having one gear thereof driven directly by said shaft assembly and the other gear thereof spaced from said shaft assembly in the same general direction as the cylinders of said engine.

5. In an outboard motor, a multiple section housing, comprising an upper section embodying an internal combustion engine; an intermediate oil reservoir section; and a lower section having a propeller shaft journalled therein; a drive shaft leading substantially vertically from said engine through said intermediate section into said lower section and drivingly connected to said propeller shaft; partition means at the bottom of said intermediate section embodying sealing means for



preventing fluid leakage along said drive shaft into said lower section, whereby said intermediate section defines an oil reservoir; an oil pump in said intermediate section; and means for feeding oil from said pump to said internal combustion engine.

6. The outboard motor defined in claim 5, wherein said intermediate section embodies an integral conduit opening into said reservoir adjacent the bottom thereof and leading to the intake side of said pump.

7. The outboard motor defined in claim 5, wherein said lower section includes water pump means, and said intermediate section includes conduit means for conducting cooling water from said pump means to said engine, in heat-conductive relationship to the oil in said reservoir, for cooling the latter.

8. In an outboard motor, a housing made up of an upper section embodying an internal combustion engine; an intermediate section secured to said upper section and defining an oil reservoir; and a lower section secured to said intermediate section and carrying a propeller shaft; a drive shaft driven by said engine and extending downwardly in said intermediate and lower housing sections and drivingly connected to said propeller shaft; an oil pump in said intermediate section and drivingly connected to said drive shaft, said pump comprising a pump body integrally formed with said intermediate section and a cover section detachably secured to said pump body section; an oil intake passage in said pump body; and an oil delivery passage in said cover section communicating with means for feeding oil to said engine.

9. The outboard motor defined in claim 8, wherein said cover section also includes a pressure responsive valve and by-pass means for relieving said pump of excessive pressures; and passage means for returning any by-passed oil to the interior of said intermediate housing section.

10. The outboard motor defined in claim 8, wherein said intermediate housing section is of generally elliptical form in horizontal section, and said pump comprises a pair of meshing gears journalled in said pump body for rotation about parallel axes, the latter being disposed along a line paralleling the major axis of said elliptical section.

11. The outboard motor defined in claim 8, wherein said pump cover section terminates at its upper side in a clamping surface adjacent the mating edges of said upper and intermediate housing sections; and means associated with said upper section for clampingly engaging said clamping surface when said upper and intermediate sections are secured together.

12. In an outboard motor, a multiple section housing comprising an upper section; an intermediate section providing an oil reservoir; and a lower section carrying a propeller shaft; a pump body integrally formed with the upper portion of said intermediate section and having an integral oil intake conduit portion extending downwardly interiorly of said intermediate section and terminating in an intake port; a drain plug secured in said intermediate section and having a ported sleeve projecting into said intake port; and a screen surrounding said ported sleeve for precluding entrance of foreign matter into said intake port.

13. The outboard motor defined in claim 12, together with a drive shaft projecting downwardly in said intermediate section and rotatable at its

upper end in said pump body, the lower end of said intermediate section providing a cylindrical pocket surrounding said drive shaft; and a sealing device secured in said pocket and sealing coacting with said shaft.

14. In an outboard motor having a housing made up of a plurality of sections secured in end-to-end relationship, said housing comprising an intermediate section having an oil pump therein and a lower housing section carrying a propeller shaft; a drive shaft projecting downwardly in said intermediate and lower housing sections and drivingly connected to said pump and said propeller shaft; the lower portion of said intermediate section having a cylindrical pocket surrounding said drive shaft; sealing means in said pocket coacting with said shaft; and means provided on



the upper portion of said lower housing section for retaining said sealing means in said pocket when said intermediate and lower housing sections are secured together.

ROMUALD KAREY.


## REFERENCES CITED

The following references are of record in the file of this patent:

UNITED STATES PATENTS

| Number | Name | Date |
|---|---|---|
| 1,762,957 | Buehner | June 10, 1930 |
| 1,932,810 | Wheeler | Oct. 31, 1933 |
| 1,943,765 | Jones | Jan. 16, 1934 |
| 2,243,819 | Herrmann | May 27, 1941 |
| 2,289,124 | Karey | July 7, 1942 |