April 3, 1945. G. T. EVANS 2,372,716

LOCATING KEY

Filed May 23, 1944

Fig. 1.

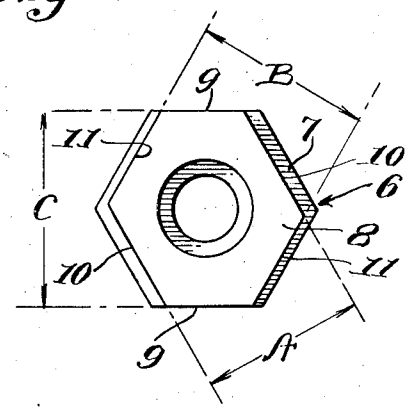

Fig. 2.

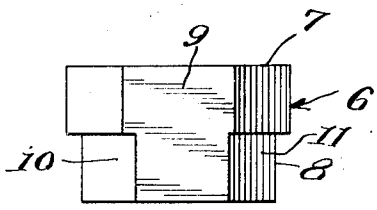

Fig. 3.

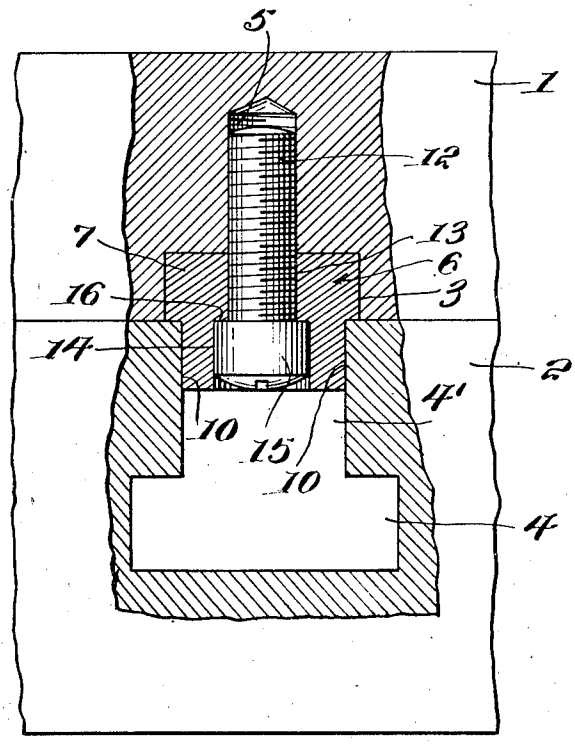

INVENTOR.
Gerald T. Evans,
BY
Victor J. Evans & Co.
ATTORNEYS

Patented Apr. 3, 1945 2,372,716

UNITED STATES PATENT OFFICE

2,372,716

LOCATING KEY

Gerald T. Evans, Brazil, Ind.

Application May 23, 1944, Serial No. 536,968

4 Claims. (Cl. 164—118)

This invention relates to a locating key and it is one object of the invention to provide a device of this character by means of which a jig, tool, or other fixture may be mounted upon a table having a slot or groove therein to receive a portion of the key which projects from the fixture, the key being of such formation that by turning it to adjusted positions it may accommodate itself to tables having slots of different widths.

Another object of the invention is to provide a locating key having one end portion of such shape that it will fit snugly in the slot of the fixture in all positions of adjustment, the other end portion of the key being so shaped that by turning the key about a securing screw portions of different diameters may be selectively disposed in position to enter the slot of the table to which the fixture is to be applied.

Another object of the invention is to provide a key having a body formed as a single block having its end portions shaped for selective engagement in slots of the fixture and the table, a bore being formed longitudinally through the body axially thereof to receive a securing screw and having one end portion diametrically enlarged to form a pocket for receiving the head of the screw.

The invention is illustrated in the accompanying drawing wherein:

Figure 1 is a view looking at the table-engaging end of the key.

Figure 2 is a side elevation of the key.

Figure 3 is a sectional view showing the key applied to a fixture and engaged with a table.

This improved locating key is intended for holding a tool, jig, or other fixture 1 in operative engagement with a machine table 2, and referring to Figure 3 it will be seen that the fixture 1 is formed with a slot or groove 3 of even width throughout its depth and the table being formed with a slot 4 which is T-shaped in cross-section. In addition to the slot 3, the fixture is also formed with a threaded socket 5 located midway the width of this slot.

The locating key which is indicated in general by the numeral 6, has a body formed as a single block of strong metal which is shaped to define a fixture-engaging end portion 7 and a table-engaging end portion 8. The two end portions of the body have been shown of hexagonal shape to provide six side faces for each end portion. It will thus be seen that each end portion has sets of opposed parallel side faces, the side faces of the fixture-engaging end portion being all of the same length. Therefore the distance between each pair of companion side faces is the same as the distance between the side faces of other sets and as this distance is slightly less than the width of the slot 3, the fixture-engaging end portion of the key will fit snugly into the slot 3 in all positions of adjustment to which the key may be turned.

The table-engaging end portion of the key also has six side faces but they are not all the same length. This is clearly shown in Figure 1 and referring to this figure it will be seen that while the side faces 9 are flush with the corresponding opposed side faces of the fixture-engaging end portion of the key, the faces 10 and 11 are inwardly off-set with respect to the corresponding side faces of the fixture-engaging end of the key. The opposed side faces 10 are offset inwardly a greater distance than the opposed side faces 11, and referring to Figure 1 it will be seen that the distance between the side faces 10 along line A is the shortest diameter of the table-engaging end portion of the key, the distance between faces 11 along line B a longer diameter and the distance between faces 9 the greatest diameter since these faces 9 are flush with the corresponding side faces of the fixture-engaging end portion of the key.

In Figure 3 it is clearly shown that the distance between the side faces 10 is such that when the key is turned to the position shown in this figure the end portion 8 of the key fits snugly in the throat 4' of the T-slot 4 of the table 2. When the fixture is to be applied to a table having a wider slot, it is merely necessary to turn the key to an adjusted position presenting the portion B or the portion C in position for use and, assuming that the tables are formed with slots of standard width, the key may have a portion snugly engaged in the slot of the table.

Since the key is to be firmly but adjustably connected with the fixture, there has been provided a screw 12 which passes through a bore formed longitudinally through the body of the key axially thereof. This bore 13, has one end portion diametrically enlarged to form a pocket 14 into which the head 15 of the screw fits with the inner end of the screw head abutting the shoulder 16 at the inner end of the pocket so that when the screw is tightened the key will be firmly held in place. By loosening the screw until the key may be withdrawn from the slot 3, the key may be turned about the screw to an adjusted position presenting a selected portion of the table-

engaging end portion of the key of known diameter in position for use.

Having thus described the invention, what is claimed is:

1. A device for retaining a tool in operative engagement with a table comprising a locating key having a body, an end portion formed on said body adapted to enter a slot formed in said tool and a second end portion adapted to be positioned in the throat of a slot formed in said table, the table-engaging portion and the tool-engaging portion being each formed with flat side faces arranged in oppositely disposed parallel pairs, the distance between each pair of side faces of the table engaging portion being different than the distances between other pairs of side faces whereby the key may accommodate itself to tables having slots of different widths, the distance between pairs of side faces of the tool-engaging portion being all the same distance whereby the key is receivable in the slot of the tool in all positions of adjustment, said key having an opening therethrough, and a screw for passing through the opening of the key and securing the key in the slot of the tool.

2. A device for retaining a tool in operative engagement with a table comprising a locating key having a body, an end portion formed on said body adapted to enter a slot formed in said tool and a second end portion adapted to be positioned in the throat of a slot formed in said table, the table-engaging portion having sets of opposed flat side faces of the same lengths whereby the key may fit the slot of the tool in all positions of adjustment, the table-engaging portion of the key being smaller than the tool-engaging portion and having sets of opposed flat side faces, in different parallel relations to corresponding side faces of the tool-engaging portion, and accommodate the key to tables having slots of different widths, and a fastener for detachably securing the key to the tool.

3. A locating key comprising a body having an end portion for fitting into a slot of a fixture and a second end portion for fitting into a slot of a table, there being a bore formed through the body axially thereof and having an enlarged end portion forming a pocket leading from the table-engaging end of the body, and a screw for passing through the bore and into a threaded socket formed in a fixture, said screw having a head for fitting within the pocket and engaging a shoulder at the inner end thereof to hold the key in the slot of the fixture, the body being turnable about the screw to circumferentially adjusted positions and having side faces for engaging side walls of the slot in the fixture to hold the key in adjusted positions, and the table-engaging portion having sets of opposed flat side faces spaced from the axis of the body different distances to provide the said table-engaging portion with various thicknesses between companion side faces and adapt the key for snug fit within table slots of different widths.

4. A device for retaining a tool in operative engagement with a table comprising a locating key having a body, an end portion formed on said body adapted to fit within a slot in said table and formed with sets of opposed parallel side faces about its circumference, and a fastener passing through the body axially thereof for securing the body to a tool and mounting the body for turning about its axis to adjusted positions, the sets of flat side faces of the table-engaging end portion of the body being spaced from the axis of the body to provide the said end portion with diameters of different lengths whereby turning the body about the fastener to adjusted positions will accommodate the key to tables having slots of different widths.

GERALD T. EVANS.