H. G. BROWER.

WRENCH.

APPLICATION FILED MAR. 10, 1919.

1,321,187.

Patented Nov. 11, 1919.

FIG. 1.

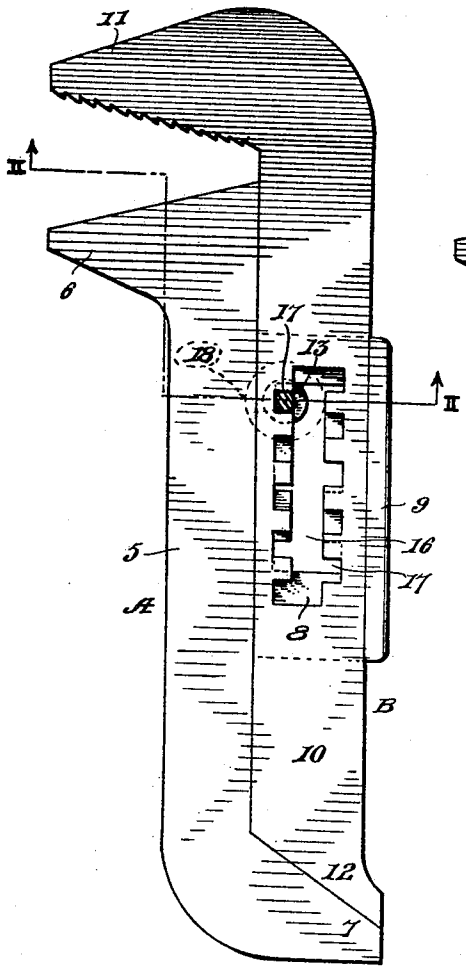

FIG. 5.

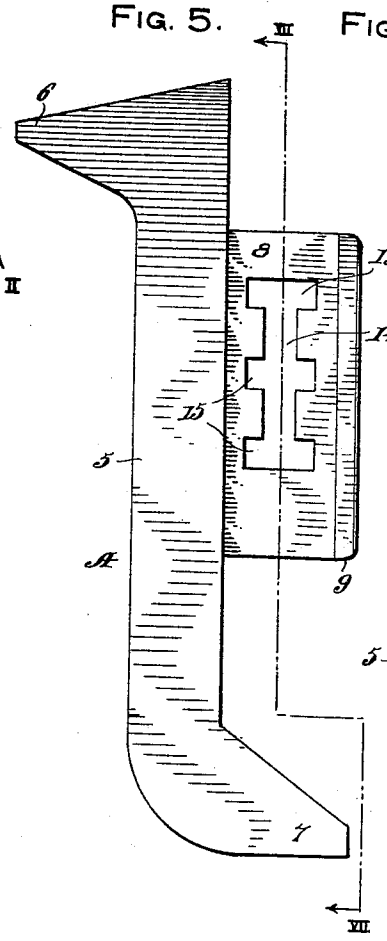

FIG. 6. FIG. 7.

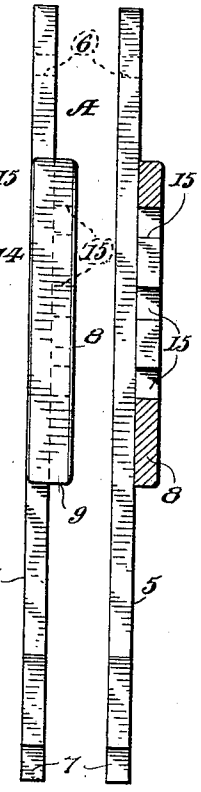

FIG. 2.

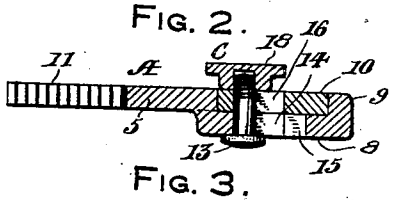

FIG. 3.

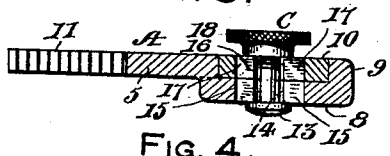

FIG. 4.

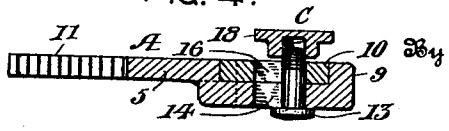

Inventor

Howard G. Brower

By J. T. Dowling

Attorney

UNITED STATES PATENT OFFICE.

HOWARD GRATZ BROWER, OF CHATTANOOGA, TENNESSEE.

WRENCH.

1,321,187. Specification of Letters Patent. Patented Nov. 11, 1919.

Application filed March 10, 1919. Serial No. 281,731.

To all whom it may concern:

Be it known that I, HOWARD GRATZ BROWER, citizen of the United States of America, residing at Chattanooga, in the county of Hamilton and State of Tennessee, have invented certain new and useful Improvements in Wrenches, of which the following is a specification.

This invention relates to certain new and useful improvements in wrenches of the sliding adjustment type, and has for its primary object, the production of a wrench of most simple construction and comprising but few parts, each of which will be strong and durable and the entire wrench will be economic as well as simple.

A further object of the invention is to construct the wrench in such a manner that it may be used as conveniently as and in all places where the ordinary pipe and nut wrenches are capable of being applied.

Other objects will become apparent as the nature of the invention is better understood and the same consists in the novel construction and combination of the several parts as will be hereinafter fully described, shown in the accompanying drawing and embodied in the appended claims.

In the drawing, in which like reference characters indicate similar parts throughout the several views,

Figure 1 is a side elevation of a wrench constructed in accordance with the present invention with the bolt of the fastening device in section,

Fig. 2 is a sectional view of the device taken substantially upon line II—II of Fig. 1,

Fig. 3 is a view similar to Fig. 2 with the fastening device in a different position and the nut thereof in elevation,

Fig. 4 is a view similar to Fig. 2 with the fastening device in a still further position and the nut partially unscrewed from the bolt of the fastening device,

Fig. 5 is a side elevational view of one of the sections of the wrench,

Fig. 6 is an edge elevation of the device shown in Fig. 5 looking toward the left of said figure, and

Fig. 7 is a sectional view taken substantially upon line VII—VII of Fig. 5.

The present wrench comprises virtually three parts only, namely, a body portion constructed in two sections A and B and a fastening device C. The section A of the body comprises a shank 5 having an inner smooth-faced jaw rigid on one end thereof and a similar outer oppositely directed jaw 7 upon the other end thereof. It is noted that the engaging faces of jaws 6 and 7 are directed at an inclination relative to the longitudinal axis of shank 5. The section A is preferably stamped from sheet metal with a laterally extending plate 8 integral with the side thereof opposite the jaw 6, said plate 8 being depressed out of but parallel with the plane of the shank 5. The plate 8 has a flange 9 along the free longitudinal edge thereof which together with the adjacent portion of the opposing longitudinal edge of shank 5 provides a suitable guide-way for snug sliding reception of the shank 10 of the body section B.

The section B has an outer rigid toothed jaw 11 on one end thereof coöperating with the jaw 6 of shank 5, and said shank 10 is also provided with an inner rigid jaw 12 upon the other end thereof coöperating with the outer jaw 7 of said shank 5. It will thus be seen that the shanks 5 and 10 when operatively disposed, are arranged with adjacent longitudinal edges in contact so that said shanks are within the same plane instead of being superimposed with flat sides contacting as is the case with the wrench in United States Patent 482,198 to John Ryan, dated September 6, 1892 and over which this invention constitutes an improvement. This difference of construction naturally places the jaws 6 and 11, and 7 and 12 in opposing relation without laterally directing any of the same and enables the wrench to be readily stamped from sheet material with as little shaping as possible. The working face of jaw 12 is inclined in a direction parallel with the working face of jaw 7 so as to coöperate with the latter in turning nuts or the like. On the other hand, the toothed jaw 11 has the working face thereof inclined in a direction opposite to the inclination of the working face of the coöperating jaw 6 so as to provide, in effect, an alligator wrench serviceable in turning pipes or other round work.

As the flat inner face of flange 9 is parallel with and spaced from the adjacent flat longitudinal edge of the shank 5, and the opposite flat longitudinal edges of shank 10 are in contact therewith, it will be seen that said shank 10 is effectively guided and prevented from any lateral movement rela-

tive to shank 5 which might cause shearing action of the bolt 13 forming part of the locking device C as will later become apparent.

The plate 8 is constructed with a longitudinal slot 14 having opposite lateral notches 15 extending therefrom at intervals and of angular formation as clearly shown in Fig. 5. The intermediate portion of shank 10 is also provided with a longitudinal slot 16 having a number of staggered lateral notches 17 extending into opposite edges thereof, said notches 17 being also of angular form and preferably being greater in number than those of the plate 8.

The fastening device C comprises in addition to the bolt 13, a suitable nut 18 threaded upon one end of said bolt so as to clamp the shank 10 firmly against the plate 8 and thereby prevent relative movement of shanks 5 and 10. With the locking devices disposed as in Fig. 3, the shank of bolt 13 is situated within the slots 14 and 16 so that the fastening effect is merely of a frictional or clamping nature and, as in some instances, the fastening effect should be of a positive nature, the notches 15 and 17 are provided so that when the proper adjustment has been had between shanks 5 and 10 to enable jaws 6 and 11 or 7 and 12 to properly engage the work, certain ones of the notches 15 of the plate 8 and notches 17 of the shank 10 will be coincident so that the shank of bolt 13 may be situated or positioned therein and thus positively prevent relative longitudinal displacement of shanks 5 and 10. This positive locking position of the bolt 13 is clearly illustrated in Figs. 1, 2, and 4 and it is obvious, that if shank 10 were allowed to swing relative to shank 5, a shearing action would be had upon the shank of bolt 13. However, as above pointed out, the manner in which shank 10 is guided by shank 5 and the flange 9, effectively prevents this shearing action by rendering impossible any lateral movement of the shank 10 relative to shank 5.

The wrench is used in the following manner:

By turning the nut 18 partially off of the shank of bolt 13 as shown in Fig. 4, the locking device may be moved laterally into the coincident slots 14 and 16 and the sections A and B may be longitudinally moved relative to each other in the desired direction so as to obtain the proper adjustment between the jaws being used. When the jaws have grasped the work, the nut 18 is turned upon the bolt 13 so as to frictionally and firmly hold the body sections together as shown in Fig. 3. However, if the positive fastening arrangement is desired, the bolt 13 is positioned within coincident notches as shown in Fig. 2 before the nut 18 is tightened. By arranging the notches 17 in staggered relation and the notches 15 in opposing relation, it will be apparent that a maximum number of minute adjustments may be obtained.

It will be observed that this wrench comprises but very few parts, that each part may be economically and durably made, and that when all of the parts are assembled the wrench is capable of being expeditiously, effectively and conveniently manipulated and may be used wherever a pipe or nut wrench is to be employed.

While the form of the invention herein shown and described is what is believed to be the preferable embodiment thereof, it is nevertheless to be understood that minor changes may be made in the form, combination and arrangement of parts without departing from the spirit and scope of the invention as claimed.

What I claim as new is:

1. A wrench comprising an elongated sheet metal shank having a rigid jaw on one end and provided with a laterally extending offset flanged plate along one longitudinal edge thereof forming a guide-way open at one side, a second elongated sheet metal shank having a jaw rigid with one end thereof in opposing relation to the jaw of the first named shank and being disposed with one longitudinal edge in flat engagement with one longitudinal edge of the first named shank, said second shank being flatly positioned upon said plate within the guide-way thereof, and means associated with said plate and the second named shank to fasten the latter in slidably adjusted positions relative to the first named shank.

2. A wrench comprising a sheet metal body section having an elongated shank with a jaw rigid upon one end thereof, an offset flanged plate rigid with and extending laterally from one longitudinal edge of said shank and forming a guide-way parallel with the longitudinal axis of said shank, a second sheet metal body section having an elongated shank slidably disposed upon said plate within the guide-way thereof and having a jaw rigid upon one end thereof in coöperative relation with the jaw of the first named shank, said shanks having adjacent longitudinal edges in contacting relation, and means to clamp said shanks against relative longitudinal movement.

3. A wrench comprising a body section having a shank provided with a jaw rigid on one end thereof, a plate rigid with and extending laterally from said shank and forming a guide-way, said plate being provided with a longitudinal slot having lateral notches extending at intervals laterally therefrom, a second body section slidably mounted upon said plate within the guide-way thereof and provided with a rigid jaw

upon one end thereof coöperating with the jaw of the first named shank, said second named shank being provided with a longitudinal slot having a plurality of notches extending laterally therefrom at intervals, and a fastening device to maintain said shanks against relative longitudinal movement, said fastening device including a nut and bolt, the shank of said bolt for reception within coincident notches of said plate and the second named shank.

4. A wrench comprising a pair of sheet metal body sections having elongated substantially similar shanks disposed with adjacent longitudinal edges in contacting relation, said shanks having coöperating rigid jaws upon adjacent ends thereof, a plate offset from and extending laterally from a longitudinal edge of one of said shanks in a plane parallel with the plane of the shanks, said plate having a flange along the free longitudinal edge thereof with its inner surface flatly engaging the other longitudinal edge of the other shank whereby relative lateral movement of the shanks is prevented, and means to fasten said shanks in adjusted positions against relative longitudinal movement.

5. A wrench comprising an elongated sheet metal shank having oppositely directed rigid jaws upon the ends thereof, a second substantially similar elongated sheet metal shank disposed with one longitudinal edge in flat contacting relation with a longitudinal edge of the first named shank and provided with rigid jaws upon the opposite ends thereof, each coöperating with one of the jaws of the first named shank, an offset flanged plate rigidly carried by one of said shanks to slidably receive the other shank and maintain the same against lateral movement, and a fastening device to retain said shanks in adjusted positions against relative longitudinal movement.

In testimony whereof I affix my signature.

HOWARD GRATZ BROWER.

Copies of this patent may be obtained for five cents each, by addressing the "Commissioner of Patents, Washington, D. C."