United States Patent [19]

Hiltebrandt

[11] **3,920,021**

[45] **Nov. 18, 1975**

[54] **COAGULATING DEVICES**

[76] Inventor: **Siegfried Hiltebrandt,** August-Lammle-Strasse 16, 7134 Knittlingen, Germany

[22] Filed: **May 15, 1974**

[21] Appl. No.: **470,010**

[52] **U.S. Cl.** **128/303.17**

[51] **Int. Cl.**[2] **A61B 17/40;** A61N 3/06

[58] **Field of Search**..... 128/303.17, 303.13, 303.14, 128/407–409, 404, 405, 303.18, 303.19

[56] **References Cited**

UNITED STATES PATENTS

164,184	6/1875	Kidder	128/303.17
452,220	5/1891	Gunning	128/408
1,908,583	5/1933	Wappler	128/303.17
1,983,669	12/1934	Kimble	128/303.17
2,275,167	3/1942	Bierman	128/303.17
3,152,590	10/1964	Zurdo et al.	128/303.18
3,163,165	12/1964	Isikawa	128/303.17
3,800,800	4/1974	Garbe et al.	128/408

Primary Examiner—Robert W. Michell
Assistant Examiner—Lee S. Cohen

[57] **ABSTRACT**

This invention relates to devices for coagulating animal tissue by means of high frequency current. Such devices are known to include two electrodes connectable to sources of high frequency alternating current at different potentials, and the coagulating current flows between these electrodes after they have been applied to the body tissue. Such devices also further consist of a barrel with a coagulator fitting provided at the distal end thereof. In accordance with the invention the coagulator fitting in a device of the kind just described utilizes two electrodes which are separated from one another by an insulator, and these are arranged at the distal end of the barrel.

6 Claims, 10 Drawing Figures

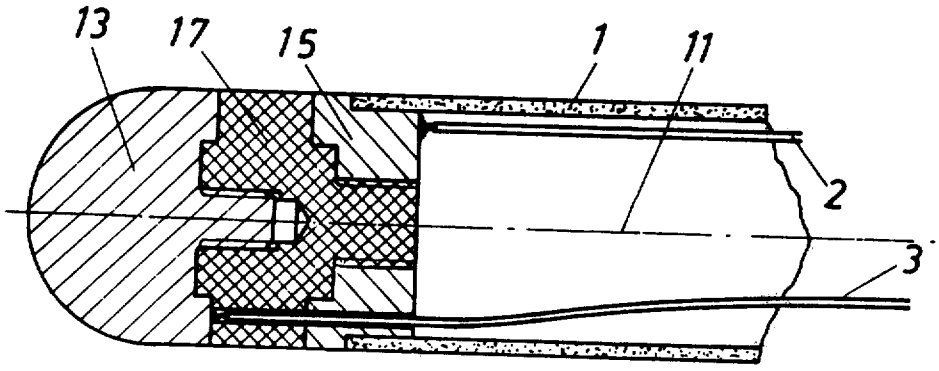

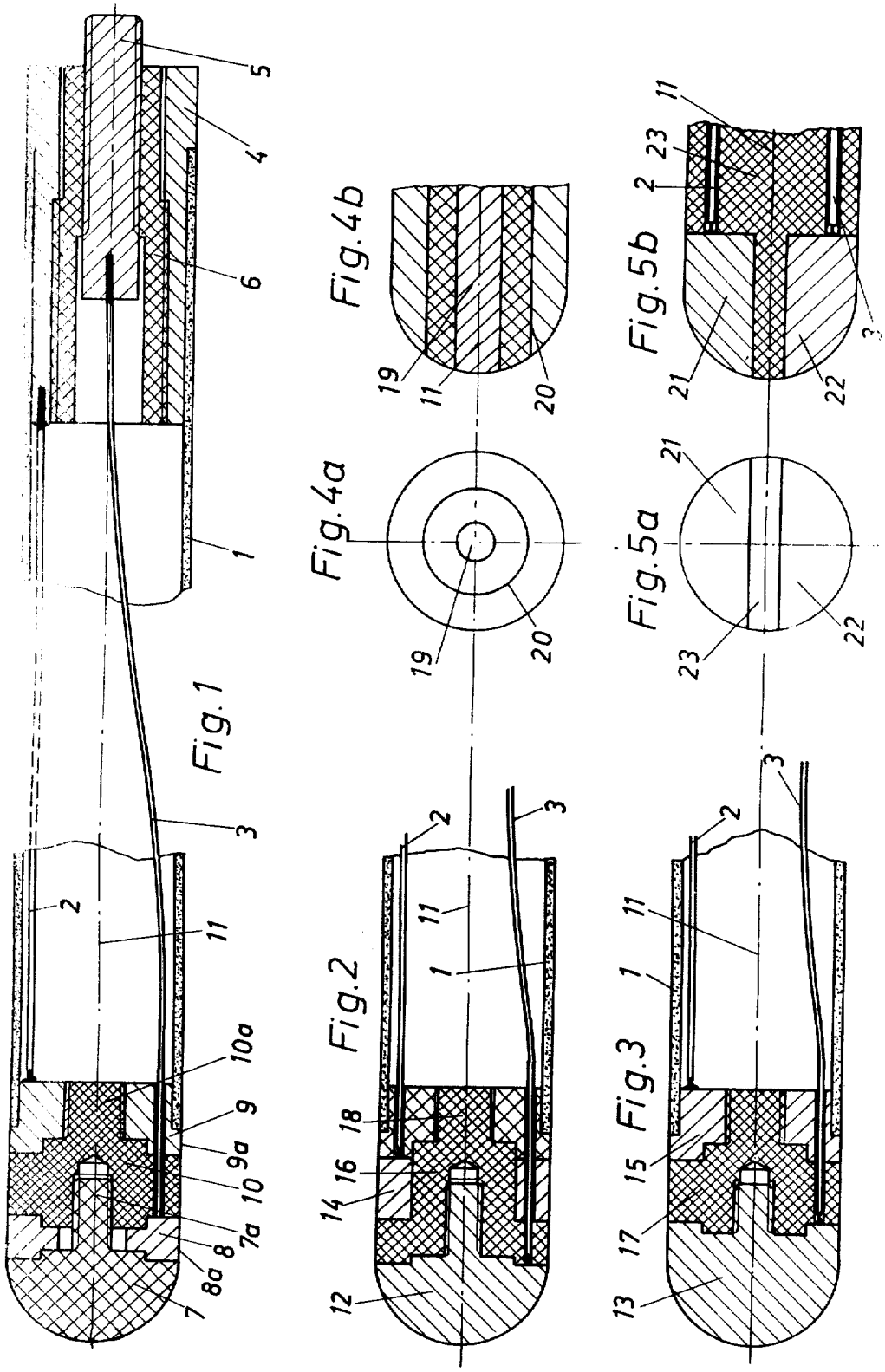
Fig. 1
Fig. 2
Fig. 3
Fig. 4a
Fig. 4b
Fig. 5a
Fig. 5b

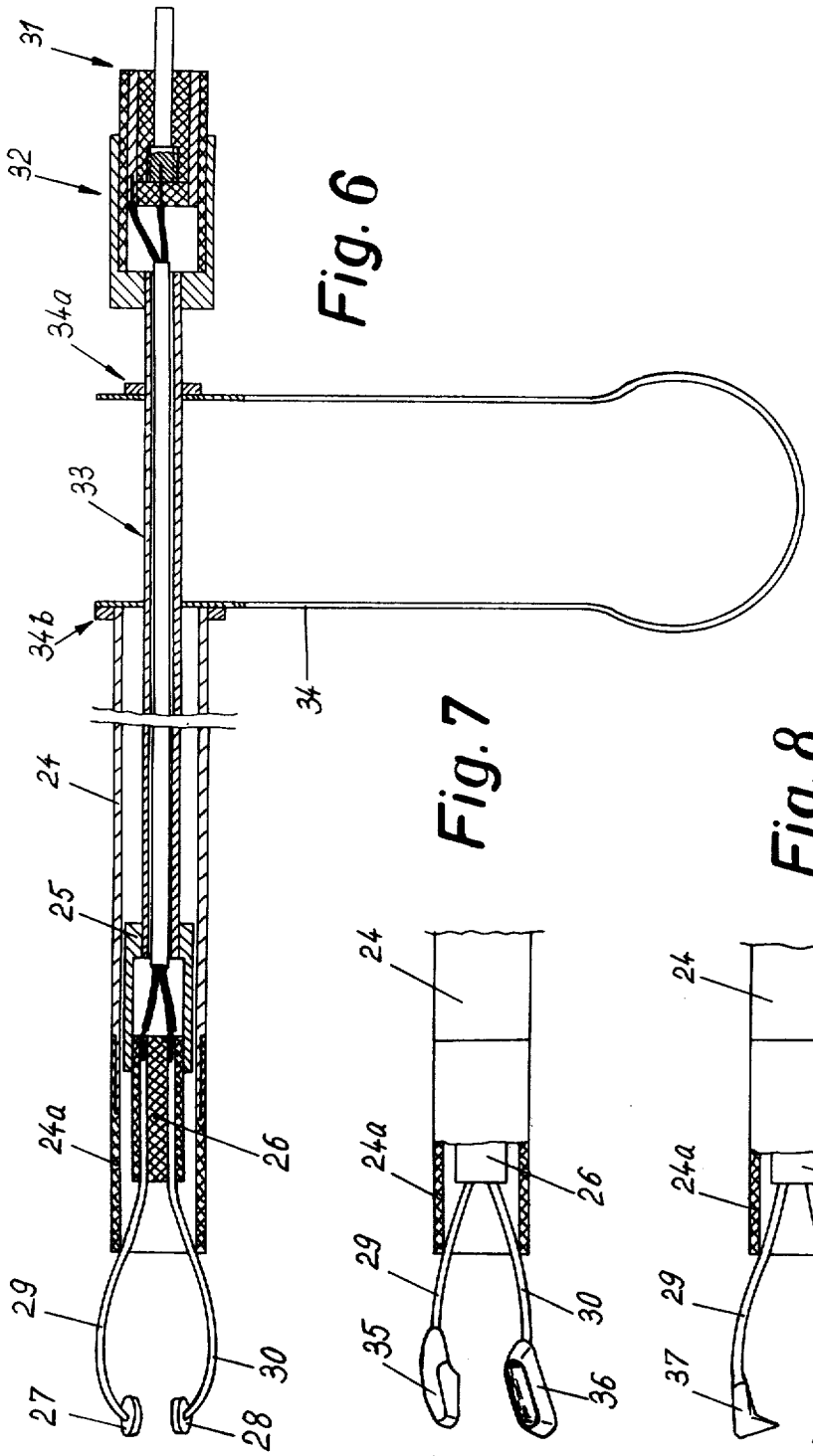

Fig. 6

Fig. 7

Fig. 8

COAGULATING DEVICES

BACKGROUND OF THE INVENTION

The present invention relates to devices for coagulating animal tissue by means of high frequency current, of the kind which comprise two electrodes connectable to sources of high frequency alternating current at different potentials, and between which the coagulating current flows after they have been applied to the body tissue, and which further consists of a barrel, at the distal end of which a coagulator fitting is provided. Hereinafter such devices will be referred to as "devices of the kind described".

In known devices of the kind described, the coagulator fitting consists of an electrode representing one pole, which is connectable to a potential different from earth via a lead extending through the barrel. The second electrode used is generally an earth pole in the form of a plate, which is applied to the appropriate portion of the anatomy of the person being treated.

During the coagulation process, the electrode situated at the end of the barrel is applied to the tissue so as, for example, to coagulate the tissue and perform a stypic operation, which may be necessary after a biopsy has been performed.

The basis of this process is that, due to the difference of potential between the electrodes (which are supplied from a source of high frequency alternations current energy, usually referred to as an HF supply apparatus) there is a flow of current through the body tissue which, if suitably regulated, causes the tissue to be dried out or parched in the vicinity of the electrode situated on the device itself, due to the fact that the latter is smaller than the earth electrode and therefore generates higher current densities at the point of transition between it and the tissue.

In known devices of the kind described, the distance between the electrodes, and thus the distance to be traversed by the current, is relatively large, which naturally leads to a considerable loss in power and, as a consequence, to resultant coagulation which is often unsatisfactory. It might be desirable in such cases to increase the operating voltage, but this is not always possible because of the danger to the patient which it involves.

A further disadvantage which is particularly apparent is that the plate-like earth electrode often does not lie completely flat against the patient's body but only has part of its conductive surface in contact. It is therefore possible in use for the current density to increase locally and cause burns in the vicinity of the earth electrode.

OBJECT OF THE INVENTION

It is an object of the invention to remove or minimise these drawbacks and to provide a reliable coagulating device.

SUMMARY OF THE INVENTION

The invention consists in a tissue-coagulating device of the kind described, wherein said two electrodes are separated from one another by an insulator, and are arranged at the distal end of the barrel.

In a particular embodiment, the two electrodes can be applied to the tissue to be coagulated cojointly, the advantage of this being that there is a shorter current path between the electrodes and that only a small power loss is encountered. In addition the large electrode which otherwise has to be handled separately is dispensed with and this prevents undesirable burns and other injuries, especially since the doctor performing the treatment is now able to guide the electrodes while they are both in his field of vision.

By making the conductive areas of the electrodes which are applied to the tissue of suitable size, the possibility also exists of deciding precisely which of the two electrodes is to play a greater or lesser part in the coagulation process. This fact may be of importance in cases where it is desired that a given electrode should operate particularly and preferentially on a special area of tissue. In view of the high current density required the effective area of the electrode in question would be made smaller than that of the other electrode.

SHORT DESCRIPTION OF THE DRAWINGS

In order that the invention may be more clearly understood, reference will now be made to the accompanying drawings which show certain embodiments thereof by way of example only and in which:

FIG. **1** shows an axial section through a first embodiment of coagulator device according to the invention,

FIG. **2** shows an axial-section through the distal end of a second embodiment,

FIG. **3** shows an axial-section through the distal end of a third embodiment,

FIG. **4***a* shows an end-on view of the distal end of a fourth embodiment which employs concentric electrodes,

FIG. **4***b* shows a longitudinal section through the embodiment shown in FIG. **4***a*,

FIG. **5***a* shows an end-on view of the distal end of a fifth embodiment of coagulator device having a modified form of electrode,

FIG. **5***b* shows an axial section through the distal end of the embodiment shown in FIG. **5***a* and,

FIGS. **6** to **8** show three further embodiments in which the electrodes are in the form of adjustable forceps.

DETAILED DESCRIPTION OF PREFERRED EMBODIMENTS

Referring now to the drawings in which like reference numerals refer to like parts, in general, the device in all embodiments comprises a barrel **1** which may be either flexible or rigid, and through which extend two electrical supply leads **2, 3,** these being connected at the distal end to the two electrodes and at the proximal end to two metal plug-terminals **4** and **5** by soldering or in any other desired way. Between the plug-terminals is a bush **6** made of insulating plastics material. The barrel **1** fits tightly over a shoulder on the outer plug terminal **4** and may be joined to the latter by bonding, shrinking or in any other desired manner. The parts **4, 5** and **6** of the plug are screwed tightly together by means of the threads indicated in the drawing and form a plug which can be inserted in an appropriate connection on the HF supply apparatus (not shown) or in a socket coming from this equipment. If the method of connection requires it, the plug may be modified from the form shown in FIG. **1** and may be a female socket connection. Corresponding plug and socket members may be used with the devices shown in the other views and there is therefore no need for further description or drawings in this respect.

In FIG. **1** the part **7** of the device at the extreme distal end, which is made of plastics material, is rounded to

prevent injury to the tissue amongst other things. The two electrodes **8** and **9** are in the form of annular bodies which are held apart by a spacer **10** made of insulating material. Furthermore, the spacer and the two electrodes, as shown, have inter-engaging shoulders and projections which support one another and by means of which the spacer and electrodes are located in their fitted positions relative to the longitudinal axis **11** of the device. The end-part **7** is screwed into a threaded bore in spacer **10** by means of a threaded projection **7***a*, while the spacer in turn is screwed into a threaded bore in electrode **9** by means of a threaded projection **10***a*. Electrode **9** has a step on its periphery so that the hollow distal end of the barrel **1** can be fitted over the step. A secure connection between parts **1** and **9** may be ensured by additionally using a bonding agent.

The respective areas of electrodes **8** and **9** which are to be applied to the body tissue to be coagulated take the form of cylindrical surfaces **8***a*, **9***a* the axis of which coincides with the axis **11** of the device. It can be seen that the distance between the electrodes, which is dictated by the dimensions of the spacer **10**, is short, which gives the advantages mentioned above. As an example, when the device is used as a probe in conjunction with an endoscope, the diameter of its nose at the distal end, and thus the diameter of the electrodes, may be 2 to 5 mm, although this statement should not be taken as representing a limitation to the size mentioned. Clearly all that this is intended to show is that the working gap between the electrode surfaces **8***a* and **9***a* may be made extremely small if this is desired.

In the embodiments shown in FIGS. **2** and **3** the one (**12** or **13**) of the electrodes which forms the distal end of the device is in the form of a rounded nose or is substantially hemispherical, while the other electrode **14** or **15** is once again represented by an annular body of which the area applied to the body tissue is, as in the embodiment in FIG. **1**, the surface of a cylinder whose axis coincides with the longitudinal axis **11** of the device. The pairs of electrodes **12, 14** or **13, 15** are held apart by spacers **16** or **17** made of insulating material and are connected to the spacers via engaged threads which can be seen in the drawings.

In FIG. **2** the rounded electrode **12** is screwed into the threaded bore in the spacer **16** by means of a threaded projection, while the annular electrode **14** fits onto a step on the spacer. The spacer is screwed into an insulating piece **18** which is joined to the barrel **1** by fitting the hollow distal end of the barrel over a step on the insulating piece **18** and connecting it thereto by means of an adhesive or the like.

In the embodiment shown in FIG. **3** the electrode **15**, which is in the form of an annular body, has a step on the periphery and the distal end of the barrel is fitted over this step and fixed in position there by means of a bonding agent.

As shown in FIGS. **4***a* and **4***b*, it is also possible for one of the two electrodes to be formed by a metal rod **19** and the other electrode by a sleeve or tube **20** which surrounds this rod and is insulated from it. In this case also the distal end of the device is rounded.

The same applies to the device shown schematically in FIGS. **5***a* and **5***b*, in which the two electrodes **21** and **22** are substantially in the form of quarter spheres which are arranged at the distal end of the device so as to be symmetrical to the longitudinal axis **11** and to form mirror images of each other and which, in conjunction with an insulator **23** situated between them, form a hemisphere.

In the case of the embodiments shown in FIGS. **6** to **8**, the coagulator electrodes are mounted at the ends of forceps arms in the form of wires the relative position of which can be adjusted by means of a handle which is operated from the proximal end.

The instrument shown in FIG. **6** has a barrel **24** in which a guide-piece **25** can be slidably displaced axially in either direction. In this guide-piece **25** is inserted a holder **26** made of insulating material. The two electrodes **27, 28** are mounted at one end of electrically conductive wires **29** and **30** in the form of plates, the other ends of the wires being inserted in different longitudinal holes in the holder **26**. Via leads of conventional kind (not shown) the electrodes have a conductive connection to a plug **31** fitted to the proximal end of the instrument.

In this case the electrodes thus form a kind of forceps the arms of which are the spring wires **29, 30**. The possibility also exists of making the circular plates shown from an insulating material, resulting in the electrodes being formed directly by the ends of wires **29** and **30**.

The plug **31** is mounted in a holder part **32** which is joined to the guide-piece **25** via an actuating rod **33**. A handle in the form of a folded grip **34** made of resilient material is rigidly connected at **34***a* to the rod **33** and at **34***b* to the barrel **24**. Near the point **34***b* where the grip **34** is attached, the actuating rod **33** is a clearance fit in the limb of the grip situated at this point.

When the limbs of the grip **34** are moved towards one another, the guide-piece **25** slides to the left of the Figure in the barrel **24** and the wire arms **29, 30**, which are sprung-loaded radially outwards, emerge from the distal end of the barrel and open out in contact with a cylindrical part **24***a* made of insulating material, as a result of which the gap between the electrodes increases. it will be apparent that the gap between the electrodes will be dictated by the position of the limbs of the grip **34** at any given time. Thus, when the limbs of the grip are released or opened, guide-piece **25** slides back to the right in barrel **24** and the gap between the electrodes is reduced again.

In the case of the embodiment shown in FIG. **7**, a projection on the upper metal electrode **35** can engage in an appropriate recess in the lower metal electrode **36**. The same applies to the embodiment shown in FIG. **8** in which the upper electrode **37** is able to engage in a V-shaped recess in the lower electrode **38**. In this case also the electrodes are actuated or adjusted in the same way as was explained in connection with FIG. **6**.

It should also be mentioned that on the one hand the device, which is suitable for the treatment both of human beings and of animals, can be used as a probe in conjunction with an endoscope. For this purpose the endoscope has a probe passage by means of which the probe can be inserted from the proximal end and can be passed through the barrel of the endoscope and up to the area of treatment. On the other hand the device may, of course, also be so formed as to be capable of use separately from endoscopes, in which case its distal end is applied directly to the area of treatment. In this case the barrel of the device may be made relatively rigid. Doing this does not of course preclude the possibility of observing the coagulation process with an endoscope which has been inserted in the body cavity through a second incision.

Finally, it should be mentioned that any other desired types of connection may be considered in addition to the connections in thread form shown and described. The possibility may also be considered of applying a cement, such as red-lead putty, between the parts to be screwed together so as to ensure that the connection is absolutely solid and secure.

I claim:

1. A high frequency alternating electric current tissue-coagulating device having an elongated means supporting two separate and spaced apart electrodes, and electrical insulator spacer means for insulating the electrodes from each other, and circuit means for connecting the electrodes to opposite poles of a source of high frequency alternating current, the improvement being: said electrical insulator spacer means being axially elongated along a longitudinal axis thereof, the electrical insulator spacer means having a first step defined therein at a distal end thereof and having a second step defined therein at an interconnected and opposite proximal end thereof; the elongated means being further for positioning the electrodes at the distal end thereof, and said insulator spacer means being further for spacing the electrodes at said distal end of the elongated means; said electrodes including a first annular electrode mounted in juxtaposition to the second step onto said electrical insulator spacer means, and a second hemispherically shaped terminal-end electrode mounted on said first step onto said electrical insulator spacer means, and said electrical insulator spacer means and said electrodes being mounted on said distal end of the elongated means at said proximal end of the electrical insulator spacer means, each of the first annular electrode and the second hemispherically shaped terminal-end electrode in a mounted state having predetermined amounts of exterior exposed surface area, respectively for each, whereby tissue in contact with both the first annular electrode and the second hemispherically shaped terminal-end electrode becomes coagulated when the high frequency alternating electric current is passed through the contacted tissue between the electrodes.

2. A high frequency alternating electric current tissue-coagulating device of claim **1**, in which said first annular electrode defines a step on its outer periphery, and in which said elongated means defines a hollow distal end fitted securedly onto the step of the first annular electrode.

3. A high frequency alternating electric current tissue-coagulating device of claim **1**, in which one of the second hemispherically shaped terminal-end electrode and the electrical insulator spacer means defines a male member, and in which the remaining other one of the second hemispherically shaped terminal-end electrode and the electrical insulator spacer means defines a female member, the male member being mounted matedly in the female member.

4. A high frequency alternating electric current tissue-coagulating device of claim **3**, in which said first annular electrode defines a step on its outer periphery, and in which said elongated means defines a hollow distal end fitted securedly onto the step of the first annular electrode.

5. A high frequency alternating electric current tissue-coagulating device of claim **1**, in which said elongated means defines a hollow distal end fitted securedly onto said second step.

6. A high frequency alternating electric current tissue-coagulating device of claim **5**, in which one of the second hemispherically shaped terminal-end electrode and the electrical insulator spacer means defines a male member, and in which the remaining other one of the second hemispherically shaped terminal-end electrode and the electrical insulator spacer means defines a female member, the male member being mounted matedly in the female member.

* * * * *

UNITED STATES PATENT OFFICE

CERTIFICATE OF CORRECTION

Patent No. 3,920,021 Dated November 18, 1975

Inventor(s) Siegfried Hiltebrandt

It is certified that error appears in the above-identified patent and that said Letters Patent are hereby corrected as shown below:

Assignee should read:

Richard Wolf GmbH,

Knittlingen, Germany

Signed and Sealed this

Thirteenth Day of July 1976

[SEAL]

Attest:

RUTH C. MASON
Attesting Officer

C. MARSHALL DANN
Commissioner of Patents and Trademarks