675674

Commonwealth of Australia
The Patents Act 1952

DECLARATION IN SUPPORT

In support of the (Convention) Application made by: MÖLNLYCKE AB, a Swedish corporation of S-405 03 Gothenburg, Sweden

for a patent for an invention entitled: A METHOD AND ARRANGEMENT FOR MUTUALLY BONDING MOVING MATERIAL WEBS, AND ABSORBENT ARTICLES THAT INCLUDE MATERIAL LAYERS MUTUALLY BONDED IN ACCORDANCE WITH THE METHOD

I (We)
of and care of the applicant company do solemnly and sincerely declare as follows:

~~a) I am (We are) the applicant(s) for the patent~~
or
b) I am (We are) authorised by the applicant(s) for the patent to make this declaration on its behalf.

Delete the following if not a Convention Application.

The basic application(s) as defined by section 141 (142) of the Act was (~~were~~) made

in Sweden on 12 October 1992

in on

in on

by

The basic application(s) referred to in this paragraph is (are) the first application(s) made in a Convention country in respect of the invention the subject of the application.

---

a) ~~I am (We are) the actual inventor(s) of the invention~~.
or
b) Verner E. ANDERSEN, a citizen of Sweden, of Lingonvägen 11A, S-435 44 Mölnlycke, Sweden

is (~~are~~) the actual inventor(~~s~~) of the invention and the facts upon which

is (~~are~~) entitled to make the application are as follows:

By virtue of an Assignment dated 29 September 1993 between the Assignors and the Assignee.

Declared at Gothenburg this 21 day of March 19 95

MÖLNLYCKE AB

Signed ..... Status House patent counsel

Declarant's Name Stefan Olsson

This form is suitable for any type of Patent Application. No legalisation required.

AU9352896

(12) PATENT ABRIDGMENT (11) Document No. AU-B-52896/93
(19) AUSTRALIAN PATENT OFFICE (10) Acceptance No. 675674

(54) Title
A METHOD AND ARRANGEMENT FOR MUTUALLY BONDING MOVING MATERIAL WEBS, AND ABSORBENT ARTICLES THAT INCLUDE MATERIAL LAYERS MUTUALLY BONDED IN ACCORDANCE WITH THE METHOD

International Patent Classification(s)
(51)[6] B32B 031/08
(51)[6] A61F 013/15 A61F 013/46 B29D 009/00
B29D 016/00

(21) Application No. : 52896/93 (22) Application Date : 11.10.93

(87) PCT Publication Number : WO94/08789

(30) Priority Data

(31) Number	(32) Date	(33) Country
9202993	12.10.92	SE SWEDEN

(43) Publication Date : 09.05.94

(44) Publication Date of Accepted Application : 13.02.97

(71) Applicant(s)
MOLNLYCKE AB

(72) Inventor(s)
VERNER E ANDERSEN

(74) Attorney or Agent
WATERMARK PATENT & TRADEMARK ATTORNEYS , Locked Bag 5, HAWTHORN VIC 3122

(56) Prior Art Documents
EP 409315
JP 6-155797
EP 295957

(57) Claim

1. A method for mutually bonding at least two moving continuous material webs (1,5) to form a laminate (12) having at least one puckered material layer, characterized by advancing a first material web (1) from a first depot at a first speed (V_1); advancing a second material web (5) from a second depot at a second speed (V_2) which is lower than and is substantially constant relative to the first speed (V_1) , bringing the first web (1) and the second web (5) together and mutually bonding said webs, while the first web (1) is carried by a rotating pressure roll, to form a laminate (12) in a web-bonding means (4) while maintaining a difference in speed between the first and the second web (1, 5), wherein the first web (1) is puckered upon entering the web-bonding means (4) as a result of the higher speed (V_1) of the first web (1) in relation to the second speed (V_2) of the second web (5) at the web-bonding moment, whereas the second web (5) remains essentially smooth, and by advancing the laminate (12) from the web-bonding means (4) at a speed which is equal to the second and lower speed (v_2).

. . ./2

8. An arrangement for mutually bonding at least two moving continuous material webs (1,5) to form a laminate (12) which includes at least one puckered material layer, characterized in that the arrangement includes means for advancing a first material web (1) from a first depot at a first speed (V_1); means for advancing a second material web (5) from a second depot at a second speed (V_2) which is lower than the first speed (V_1); means for mutually combining the first web (1) with the second web (5); a web-bonding means (4) which functions to bond the first web (1) to the second web (5) to form a laminate (12) while maintaining the difference in speed between the first web (1) and the second web (5) and, at the same time, to create folds or wrinkles (15) in the first web (1) as a result of this speed difference while the second web (5) remains essentially smooth; and means for advancing the laminate (12) from the web-bonding means at a speed which is equal to the second and lower speed (V_2).

OPI DATE 09/05/94 APPLN. ID 52896/93
AOJP DATE 21/07/94 PCT NUMBER PCT/SE93/00827

AU9352896

INTERNATIONAL APPLICATION PUBLISHED UNDER THE PATENT COOPERATION TREATY (PCT)

(51) International Patent Classification 5 :
B32B 31/08

A1

(11) International Publication Number: WO 94/08789

(43) International Publication Date: 28 April 1994 (28.04.94)

(21) International Application Number: PCT/SE93/00827

(22) International Filing Date: 11 October 1993 (11.10.93)

(30) Priority data:
9202993-3 12 October 1992 (12.10.92) SE

(71) Applicant *(for all designated States except US)*: MÖLNLYCKE AB [SE/SE]; S-405 03 Göteborg (SE).

(72) Inventor; and
(75) Inventor/Applicant *(for US only)* : ANDERSEN, Verner, E. [SE/SE]; Lingonvägen 11 A, S-435 44 Mölnlycke (SE).

(74) Agents: BERG, Sven, Anders et al.; H. Albihns Patentbyrå AB, P.O. Box 3137, S-103 62 Stockholm (SE).

(81) Designated States: AU, CA, CZ, FI, HU, JP, NO, NZ, PL, SK, US, European patent (AT, BE, CH, DE, DK, ES, FR, GB, GR, IE, IT, LU, MC, NL, PT, SE).

Published
With international search report.

675674

(54) Title: A METHOD AND ARRANGEMENT FOR MUTUALLY BONDING MOVING MATERIAL WEBS, AND ABSORBENT ARTICLES THAT INCLUDE MATERIAL LAYERS MUTUALLY BONDED IN ACCORDANCE WITH THE METHOD

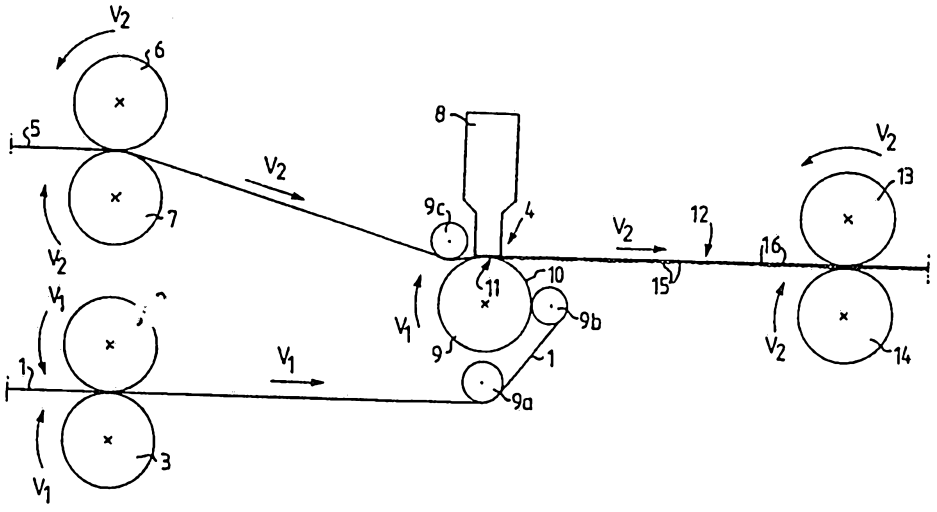

(57) Abstract

The present invention relates to a method for mutually bonding at least two moving continuous webs of material (1, 5) to form a laminate (12) which includes at least one puckered material layer. A first and a second material web (1, 5) are advanced at different speeds (V_1, V_2) to a web-bonding means (4) in which the webs are mutually bonded and the resultant laminate (12) is further advanced at the lower speed (V_2). Because of the difference in speed between the two webs (1, 5), that web (1) which moves at the higher speed (V_1) at the web-bonding moment is puckered while the other web (5) remains smooth. The invention also relates to an arrangement for mutually bonding two material webs (1, 5) in accordance with the method, and to an absorbent article (17) which includes a liquid-receiving outer layer (20) which contains at least one puckered, first liquid-permeable layer (21) and at least one smooth, second liquid-permeable layer (22).

A Method and Arrangement for Mutually Bonding Moving Material Webs, and Absorbent Articles that Include Material Layers Mutually Bonded in Accordance with the Method

The present invention relates to a method and to an arrangement for mutually bonding at least two moving continuous webs of material. The invention also relates to a disposable absorbent article, such as a diaper, a sanitary napkin, an incontinence guard or the like which includes an absorbent pad, a liquid-impermeable layer on one side of the pad and a liquid-permeable, liquid-receiving outer layer on the other side of the pad, said outer layer including at least two mutually bonded liquid-permeable layers.

Methods for mutually bonding two or more moving material webs to form an essentially smooth laminate are known to the art. According to one such known method, the material webs are thermobonded between two heated, rotating rolls. According to another method, a binding agent is applied to at least one of the webs, whereafter the webs are combined and bonded to one another, for instance by passing the webs between two rolls. Another known method involves laminating two material webs with the aid of ultrasonic welding techniques. A prerequisite for both thermobonding and ultrasonic welding is that at least one of the webs includes weldable material. In these cases, the webs are comprised, for instance, of non-woven fabric comprising fibres of, for instance, polyethylene, polypropylene, polyester or the like. Webs of thermoplastic films are another example of such material webs.

The European Patent Application EP-A-0 409 315 teaches a method of producing a laminate which includes at least one corrugated laminate layer. Two laminate layers, of which at least one has corrugations in the movement direction of the layer, are passed through the nip of two rolls of which at least one has a plurality of peripheral grooves in which the corrugations are intended to fit while the layers are mutually bonded in regions located between the corrugations, i.e. in regions corresponding to the spaces between the grooves in the roll or rolls. According to this known laminating method, it is important that the corrugations are not displaced laterally so as to leave the grooves, i.e. to lie completely or partially between the grooves in the roll or rolls. If this should happen, wrinkles are formed in the laminate and which is said to be unsatisfactory.

It is also known from the so-called Micrex process, proposed by Micrex® Corporation, to microcrêpe material webs that are comprised, for instance, of non-woven fabric. This process, however, is not concerned with mutually joining two material webs, and the microcrêping process is carried out on a single layer, or on a laminate, comprised for instance of non-woven fabric. Microcrêping can be likened to microscopic wrinkling of the material web transversely to its move. c direction. However, the durability of the wrinkles in the web in a continued manufacturing process is highly uncertain. In one diaper manufacturing process for instance, the web is subjected to significant tensile forces in the process direction of the web and the diaper manufacturing machine. Since the wrinkles are not permanently set, there is a serious risk that the wrinkles will be smoothed-out when the web is subjected to forces in its

longitudinal direction. Furthermore, if the microcrêped material webs are rolled-up on a rack after the microcrêping process and before being used in the diaper manufacturing process, the wrinkles may be influenced unfavourably, e.g. may be smoothed-out and disappear.

The present invention relates to a method which will enable moving webs of material to be mutually bonded quickly and simply, in a manner such that at least one of the webs will be permanently puckered while at least one of said webs will remain essentially smooth. According to the invention, this is achieved with a method of the kind defined in the introduction which further comprises the steps of advancing a first web of material from a first depot or store at a first speed, advancing a second web of material from a second depot or store at a second speed which is lower than the first speed, bringing the first web and the second web together and mutually bonding said webs to form a laminate with the aid of a web bonding arrangement while maintaining the speed difference between the first web and the second web, wherein said first web is puckered upon entry into the web bonding arrangement as a result of the higher speed of said first web in relation to the speed of the second web at the web bonding moment, while the second web remains essentially smooth, and advancing the laminate from the web bonding arrangement at a speed which is equal to the second and lower speed. The invention also relates to an arrangement for carrying out the method, said arrangement being characterized by the features set forth in the following Claim 7.

Earlier known web bonding methods have either been intended to provide the smoothest possible laminate,

i.e. have been intended to avoid puckering of the webs in the laminating process, or, as in the case of EPA-0 409 315, the intention has been to preform corrugations and to carefully avoid wrinkling of the corrugations at the web-bonding moment. The intention with the present invention is to form folds or wrinkles at the actual web-bonding moment. The puckers thus formed in one of said webs are also made permanent, because the web is bonded to another, smooth web at points and/or curves between the folds or wrinkles. Thus, it is impossible to smooth-out the wrinkles by applying a tensile force to the laminate in the direction of its longitudinal axis. Smoothing-out of the wrinkles is prevented by the smooth web layer and the wrinkles will therewith be permanent.

Another object of the invention is to provide an absorbent article of the kind defined in the introduction which will allow liquid to quickly pass therethrough and which has a low re-wetting tendency. This is achieved by the fact that at least a first of said liquid-permeable layers is puckered or wrinkled and that a second of said liquid-permeable layers is essentially smooth.

A liquid-receiving outer layer according to the invention is able to receive a large volume of liquid, because the first liquid-permeable layer is puckered. The first layer thus exhibits a large number of troughs and peaks which considerably increase the volume of the liquid-receiving outer layer in comparison with a perfectly smooth liquid-receiving outer layer.

Other features of the present invention and advantages afforded thereby will be evident from the following description and Claims.

The invention will now be described in more detail with reference to exemplifying embodiments thereof and also with reference to the accompanying drawings, in which

Figure 1 illustrates schematically a method and an arrangement according to one embodiment of the invention;

Figure 2 is a longitudinal sectional view of part of a laminate constructed in accordance with the method illustrated in Figure 1;

Figure 3 is a view from above of an incontinence guard according to one embodiment of an inventive absorbent article; and

Figure 4 is a cross-sectional view of the incontinence guard illustrated in Figure 3.

As illustrated in Figure 1, a first web of material 1 is advanced from a first depot or store (not shown) and in between two rotating rolls 2 and 3 whose peripheral speeds are equal to a first speed V_1. The first web 1 is thus advanced at said first speed V_1 to a web-bonding means 4, via guide rollers 9a, 9b. A second web of material 5 is advanced from a second depot or store (not shown) and in between two rotating rolls 6 and 7 whose peripheral speed is equal to a second speed V_2, and the second web 5 is then further advanced to the web-bonding means 4 via a guide roller 9c at said second speed V_2. The first speed V_1 is higher than the second speed V_2 and the speed of the first web 1 will thus be higher than the speed of the second web 5 as the two webs move through the web-bonding means 4. The web-bonding means 4 includes an ultrasonic horn 8 and a rotating counter-pressure roll 9 whose peripheral speed corresponds to the first speed V_1. The horn 8 and the roll 9 define therebetween a nip 11 through which the two webs 1, 5

pass. The second web 5 will pass between the horn 8 and the first web 1 and the first web 1 will lie against the rotating counterpressure roll 9 as the two webs 1, 5 are mutually bonded to form a laminate 12. The ultrasonic horn 8 vibrates at a suitable frequency, for instance a frequency of 20 kHz or thereabove, and lies under pressure against the roll 9. Disposed on the roll 9 are a number of elements which stand out from the outer surface 10 of the roll, these elements being too small to be seen in the schematic view of Figure 1. However, these elements are disposed in any suitable manner known to the skilled person, for instance in a discontinuous pattern of discrete spikes, elongated ribbons arranged essentially in the axial direction of the counterpressure roll, or like arrangements. The pattern may be regular or irregular and it may cover the whole of the outer surface 10 of the counterpressure roll or may solely cover parts thereof. The outwardly projecting elements function as local dollies or anvils in the formation of welded laminate parts as the first and the second webs 1, 5 pass through the nip 11 between the ultrasonic horn 8 and the counterpressure roll 9. The mutually welded first and second webs 1, 5 thus leave the web bonding arrangement 4 as a laminate 12 which then passes between two rotating rolls 13, 14 whose peripheral speeds are equal to the second speed V_2.

As the first web 1 passes through the nip 11 in the web-bonding arrangement 4 at a speed V_1 which is higher than the second speed V_2, this speed being the speed at which the second web 5 passes through the web-bonding means 4 and at which the laminate 12 leaves said arrangement 4, a given length of the first web 1 will be puckered or wrinkled as a result of the sudden transition from the

higher speed V_1 upstream of the web bonding moment, to the lower speed V_2 downstream of said web-bonding moment. In other words, at the moment of mutually bonding the webs, there is an abrupt decrease in the speed of the first web 1 in the nip 11 without the trailing parts of the first web 1 that have still not yet reached the nip 11 experiencing the same reduction in speed. This additional forward feed of the first web 1 in comparison with the second web 5, which moves at said second speed V_2 during the whole of the process, results in the formation of transverse folds 15 in the first web 1. These folds 15 are permanently locked between the bonding regions 16 of the laminate 12. This will best be seen from Figure 2. The choice of the speed differential between V_1 and V_2 will depend on the size of the folds desired, i.e. how much additional length of material shall be fed forward by the first web 1. Other factors which influence the choice of this difference in web speeds include the size of the outwardly projecting elements, i.e. their length extension, and the "contraction rate" of the webs. At small speed differences, no appreciable folding of the material will take place, and retardation of the faster moving first web will solely result in deformation in the plane of the web. Naturally, different materials have different resistances to deformation. Consequently, the speed difference V_1-V_2 must be greater than the "contraction rate" for each given material, so as to enable folds to be formed in the material web. Suitable conditions are achieved when V_1 is at least 40% higher than V_2, to ensure that said condition will be satisfactorily fulfilled. For instance, V_1 may be approximately twice as high as V_2, although speed differences of 150%, 200% or still greater are conceivable. In some cases, the counterpressure roll

9 shown in Figure 1 may have a peripheral speed which exceeds V_1.

In the case of the embodiment illustrated in Figure 1, the first web 1 may have the same width as the second web 5 or may be narrower when desiring a laminate 12 that has folds solely over a part of its width. When the first web 1 is narrower than the second web 5, the first web 1 may be either centred in relation to the imaginary, longitudinally extending symmetry axis of the web 5 or may be offset laterally in either direction. In this latter case, it is also conceivable for a third web of material to move along side the first web 1 and slightly displaced laterally therefrom, up to the web-bonding means 4. In this case, the total width of the first and the third webs will be smaller than the width of the smooth, second web. This enables the laterally separated parts of the bonded web to be provided with folds. Naturally, it is conceivable to bond more than two narrow webs with the smooth web. For instance, it is possible to produce a laminate which exhibits strips of many, narrow puckered or folded layers. Naturally, any one of the webs forming the laminate 12 may, in turn, consist of a multi-layer laminate and thus need not necessarily be comprised of solely one single layer.

Examples of material webs which can be bonded together in accordance with the present invention include non-woven fabrics, for instance spun-bonded fabric and thermobonded fabric. Other weldable materials are also conceivable, such as thermoplastic films, which may also be perforated. It is also conceivable for only one of the webs to comprise weldable material. The other web or

webs may, in this case, be comprised of tissue material, for instance.

As an alternative, a calendar may be used instead of the web-bonding means illustrated in Figure 1. A calendar includes two counter-rotating, heated rolls or cylinders between which the webs are bonded together as they pass therebetween. One roll rotates at a peripheral speed corresponding to the first, higher speed V_1 and the second roll rotates at a peripheral speed corresponding to the second, lower speed V_2. The mutually bonded webs, i.e. the laminate, exiting from the rolls travels at the lower speed V_2. In the precise manner described with reference to Figure 1, the first web will be puckered or folded in parts which lie upstream of the web-bonding site in the roll nip as a result of the abrupt change in speed in the web-bonding moment upon passage between the rolls. The second web remains smooth, similar to the second web of the Figure 1 embodiment. Similar to the counterpressure roll 9, one of the calendar rolls has a discontinuously patterned surface.

A laminate produced in accordance with the inventive method is particularly suited for use as a liquid-receiving outer layer of a disposable absorbent article, such as a diaper, incontinence guard and the like. An incontinence guard 17 will now be described by way of an example of an inventive absorbent article, with reference to Figures 3 and 4.

The illustrated incontinence guard 17 includes an absorbent pad 18, a liquid-impermeable outer layer 19 on one side of the pad 18, and a liquid-receiving outer layer 20 on the other side of said pad. When the article is

worn, the liquid-receiving outer layer 20 is intended to face towards the wearer. The liquid-receiving outer layer 20 includes a puckered, first liquid-permeable layer or sheet 21, and an essentially smooth, second liquid-permeable layer 22. The smooth, second liquid-permeable layer 22 is placed nearest the absorbent pad 18, while the puckered, first liquid-permeable layer 21 is placed on that side of the smooth, second layer 22 which is distal from the pad 18. The puckered, first liquid-permeable layer 21 presents a large number of folds or wrinkles which extend essentially in the longitudinal direction of the incontinence guard 17. The puckered, first layer 21 is bonded to the smooth, second layer 22 at a number of bonding regions 16 in the form of a large number of discrete binding points, for instance in the form of punctiform welds. The first liquid-permeable layer 21 and the second liquid-permeable layer 22 both include weldable material. These materials may be comprised, for instance, of non-woven fabric of the thermobond and/or spun-bond type. The two liquid-permeable layers 21, 22 may be comprised of different types of non-woven fabric or may be comprised mutually of the same kind of non-woven fabric, provided that the layers can be bonded together by thermobonds or welds, for instance by ultrasonic methods. For instance, the puckered, first liquid-permeable layer 21 may be comprised of a spun-bond non-woven fabric having a surface weight of 15 g/m^2, while the smooth, second liquid-permeable layer 22 may be comprised of a spun-bond non-woven fabric having a surface weight of 20 g/m^2. Alternatively, instead of using a smooth, second liquid-permeable layer 22 which is comprised of spun-bond non-woven fabric, said second layer may be comprised of a carded thermobond non-woven fabric having a surface

weight of 17 g/m2. It is advantageous to use a spun-bond non-woven fabric as the puckered, first liquid-permeable outer layer, since spun-bond non-woven material can be handled in low surface weights and is felt to be soft against the wearer's skin in use. The non-woven fabrics are essentially inelastic, which is an advantage since this will counteract smoothing of the folds or wrinkles 15 as a result of elastic stretching of the smooth, second liquid-permeable layer 22. The non-woven materials may include for instance polypropylene fibres, polyester fibres, viscose fibres or mixtures thereof. Bicomponent fibres are also conceivable.

As a result of the peaks and troughs of the folds or puckers on the liquid-receiving outer layer 20, the specific liquid-receiving volume of said layer is much greater than the liquid-receiving volume of a conventional liquid-permeable layer having an essentially smooth liquid-receiving surface and therefore a relatively low liquid-receiving volume. This enables liquid to be transported very quickly through the liquid-receiving layer into the absorbent pad. The liquid-receiving outer layer 20 also has a very low re-wetting tendency, i.e. liquid is prevented from passing from the absorbent pad 18 back up through the outer layer 20 and thus from coming into contact with the wearer's skin.

The absorbent material contained by the absorbent pad 18 may be cellulose fluff. The absorbent material may also include liquid-absorbing hydrogels, so-called superabsorbents, by which is meant polymers that are able to absorb liquids in quantities many times their own weight. These hydrogels may be mixed more or less homo-

geneously in the cellulose fluff or may be placed in layers within the absorbent pad 18. However, the construction of the absorbent pad 18 has no critical significance to the invention, provided that the pad is able to fulfil the requirement of quickly receiving and spreading the liquid that penetrates through the liquid-receiving outer layer 20.

The liquid-impermeable outer layer 19 functions as a barrier layer in preventing leakage of the liquid absorbed by the absorbent pad 18. This liquid-impermeable outer layer 19 may, for instance, be comprised of polyethylene film or like material.

The puckered, first liquid-permeable layer 21 of the embodiment illustrated in Figure 3 takes-up an area which is smaller than the total area of the liquid-receiving outer layer 20. The remaining area of the liquid-receiving surface layer 20 is comprised solely of the smooth, second liquid-permeable layer 22. The puckered, first liquid-permeable layer 21 takes-up roughly a third of the surface area of the liquid-receiving outer layer 20 and is placed in the crotch part 23 of the incontinence guard 17, said crotch part being the narrower part of the incontinence guard 17 and is intended to be placed between the wearer's thighs in use. Located on either side of the crotch part 23 is a respective end-part 24, 25 which is intended to face forwardly and rearwardly of the wearer. Since the incontinence guard 17 illustrated in Figure 3 is fully symmetrical with regard to the configuration of the crotch part 23 and the end-parts 24, 25, there is no actual front and back to the incontinence guard 17. This need not always be the case, however. On the contrary, a diaper, sanitary

napkin or an incontinence guard may be provided with a pronounced front and back end so as to achieve the best possible body fit. In this case, the crotch part may be displaced forwardly or rearwardly in the article, according to the intended use of the article and its configuration. Since the crotch part is normally that part of an absorbent article which receives the body liquid excreted by the wearer, the puckered, first liquid-permeable layer 21 will define a liquid-receiving zone 26 in the crotch part 23. Naturally, in certain cases, this liquid-receiving zone 26 may also be located outside the crotch part, for instance in the front part of diapers that are intended for male users, who normally deliver body liquid to a forward part of the diaper located in front of the crotch part. In cases such as these, the puckered, first liquid-permeable layer will, of course, be located in these forward regions of the article. As will be understood, cases are conceivable in which the whole of the liquid-receiving outer layer shall be capable of allowing liquid to pass quickly therethrough and in cases such as these, the puckered, first liquid-permeable layer will cover the whole of the smooth, second liquid-permeable layer. Again, in other cases in which it is desired to save material and not to have a fully covering puckered first layer, two or more puckered layers can be provided which together cover a surface area that is smaller than the whole of the area of the liquid-receiving surface layer but with each layer covering individual parts over more or less separated portions of the incontinence guard. For instance, a plurality of transverse strips may be disposed across the incontinence guard.

The folds 15 illustrated in Figure 3 are oriented essentially in the longitudinal direction of the incontinence guard 17, although it will be understood that the puckered layer 21 can be applied so that the wrinkles or folds 15 are oriented essentially transversely to the longitudinal direction of the incontinence guard 17. Since the peaks of these folds will, to some extent, prevent liquid and fluid excrement from running transversely to the folds, the direction in which the folds 15 are oriented in different parts of the incontinence guard 17 will also have some significance. It may be beneficial for the folds 15 in the crotch part 17 to extend in the longitudinal direction of the incontinence guard 17, since liquid that meets the liquid-receiving outer layer 20 close to the edge of the incontinence guard will find difficulty in running over the edge of the incontinence guard even if, against expectations, the liquid is not transported quickly through the outer layer 20 and into the absorbent pad 18. Instead, it may be advantageous for the folds or wrinkles in the end-parts 24, 25 to be oriented in the transverse direction of the incontinence guard, at least in the proximity of the end-edges.

It has also been found possible to allow the puckered, first liquid-permeable layer to be turned inwardly towards the absorbent pad without appreciably impairing the short liquid-permeation time, i.e. to permit the smooth layer to receive the liquid first. This may sometimes be preferred for aesthetic reasons, when in the case of certain products it is undesirable for the liquid-receiving outer layer to exhibit a puckered and wrinkled outer surface.

It will be understood that the invention is not restricted to the illustrated exemplifying embodiment thereof and that a number of modifications are conceivable within the scope of the following Claims.

THE CLAIMS DEFINING THE INVENTION ARE AS FOLLOWS:

1. A method for mutually bonding at least two moving continuous material webs (1,5) to form a laminate (12) having at least one puckered material layer, characterized by advancing a first material web (1) from a first depot at a first speed (V_1); advancing a second material web (5) from a second depot at a second speed (V_2) which is lower than and is substantially constant relative to the first speed (V_1) , bringing the first web (1) and the second web (5) together and mutually bonding said webs, while the first web (1) is carried by a rotating pressure roll, to form a laminate (12) in a web-bonding means (4) while maintaining a difference in speed between the first and the second web (1, 5), wherein the first web (1) is puckered upon entering the web-bonding means (4) as a result of the higher speed (V_1) of the first web (1) in relation to the second speed (V_2) of the second web (5) at the web-bonding moment, whereas the second web (5) remains essentially smooth, and by advancing the laminate (12) from the web-bonding means (4) at a speed which is equal to the second and lower speed (v_2).

2. A method as claimed in claim 1, wherein the speed difference (V_1-V_2) is greater than the contraction rate of the first web (1) at which said first web (1) is deformed solely in its plane without being puckered.

3. A method as claimed in claim 2, wherein the first speed (V_1) is at least 40% higher than the second speed (V_2).

4. A method as claimed in claim 2 or claim 3 wherein the first speed (V_1) is twice as high as the second speed (V_2).

5. A method as claimed in any one of the preceding claims wherein the peripheral speed of the rotating roll (9) is at least equal to the first speed (V_1).

AUSTRALIAN PATENT OFFICE

6. A method as claimed in any one of the preceding claims, wherein the webs are mutually bonded by an ultrasonic bonding process.

7. A method as claimed in any one of claims 1 to 5 wherein webs are mutually bonded by a calendaring process, in which a first rotating roll has a peripheral speed which corresponds to the speed (V_1) of the first web, and a second rotating roll has a peripheral speed which corresponds to the speed (V_2) of the second web.

8. An arrangement for mutually bonding at least two moving continuous material webs (1,5) to form a laminate (12) which includes at least one puckered material layer, characterized in that the arrangement includes means for advancing a first material web (1) from a first depot at a first speed (V_1); means for advancing a second material web (5) from a second depot at a second speed (V_2) which is lower than the first speed (V_1); means for mutually combining the first web (1) with the second web (5); a web-bonding means (4) which functions to bond the first web (1) to the second web (5) to form a laminate (12) while maintaining the difference in speed between the first web (1) and the second web (5) and, at the same time, to create folds or wrinkles (15) in the first web (1) as a result of this speed difference while the second web (5) remains essentially smooth; and means for advancing the laminate (12) from the web-bonding means at a speed which is equal to the second and lower speed (V_2).

9. An arrangement as claimed in claim 8, wherein the web-bonding means (4) includes a rotating roll (9) whose peripheral speed corresponds to the first speed (V_1) and against which roll (9) and the first web (1) abuts as it passes through the web-bonding means (4).

10. An arrangement as claimed in claim 9, wherein the web-bonding means (4) includes an ultrasonic horn (8) and said rotating roll (9) which is comprised of a counterpressure roll that includes a plurality of elements which project from the outer surface of the roll and which are disposed in a selected pattern and

AUSTRALIAN PATENT OFFICE

serve as local weld dollies or anvil means in forming welded parts in the laminate (12), such as to effect bonding of the webs by means of ultrasonic welding.

11. An arrangement as claimed in claim 9, wherein the outwardly projecting elements comprise a plurality of discrete spikes which are disposed in a discontinuous pattern over at least part of the outer surface (10) of the counterpressure roll, or comprise a plurality of separated, elongated ribs placed over at least part of the outer surface (10) of the counterpressure roll.

12. An arrangement as claimed in claim 7 substantially as hereinbefore described with reference to and as illustrated in Figure 1 of the accompanying drawings.

DATED this 5th day of December, 1996.
MOLNLYCKE AB

WATERMARK PATENT & TRADEMARK ATTORNEYS
290 BURWOOD ROAD
HAWTHORN VICTORIA 3122
AUSTRALIA

LPS/ML DOC 10 AU5289693.WPC

AUSTRALIAN PATENT OFFICE

52896/93

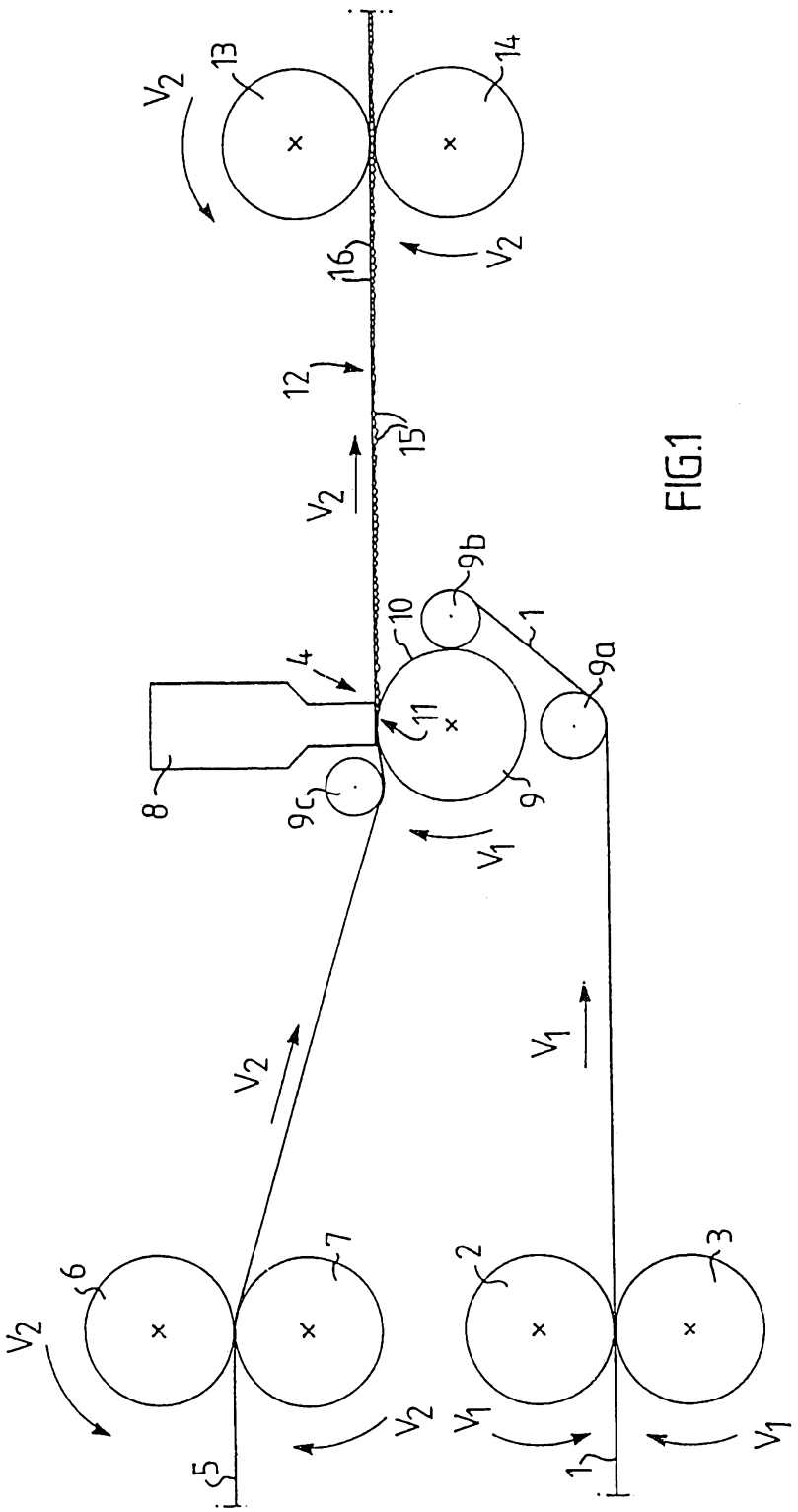

FIG.1

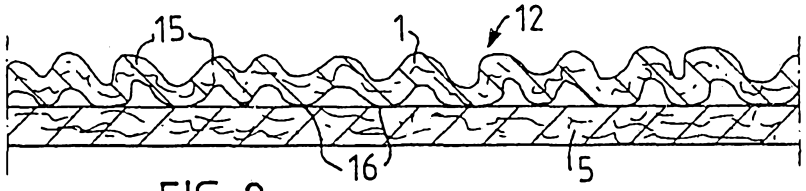

FIG. 2

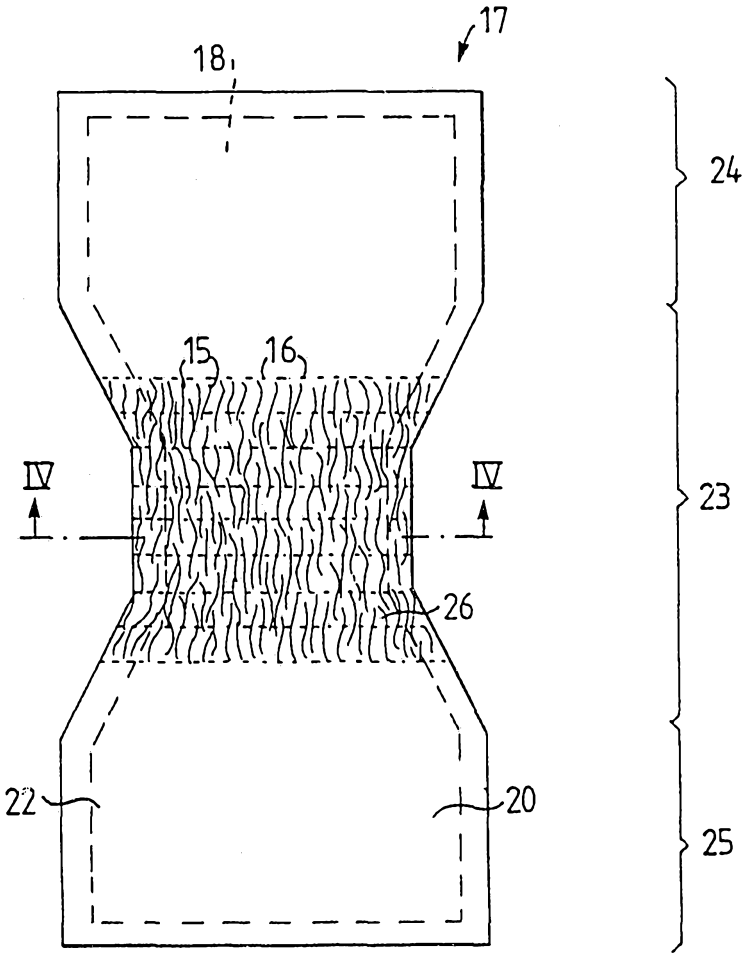

FIG.3

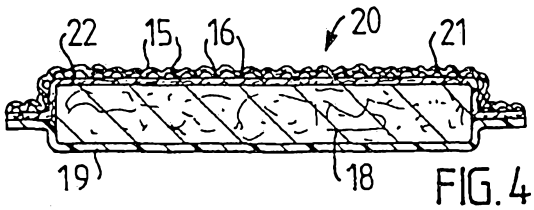

FIG. 4

INTERNATIONAL SEARCH REPORT

International application No.
PCT/SE 93/00827

A. CLASSIFICATION OF SUBJECT MATTER

IPC5: B32B 31/08
According to International Patent Classification (IPC) or to both national classification and IPC

B. FIELDS SEARCHED

Minimum documentation searched (classification system followed by classification symbols)

IPC5: B32B

Documentation searched other than minimum documentation to the extent that such documents are included in the fields searched

SE,DK,FI,NO classes as above

Electronic data base consulted during the international search (name of data base and, where practicable, search terms used)

WPI, CLAIMS, RM25

C. DOCUMENTS CONSIDERED TO BE RELEVANT

Category*	Citation of document, with indication, where appropriate, of the relevant passages	Relevant to claim No.
X	EP, A1, 0409315 (THE PROCTER & GAMBLE COMPANY), 23 January 1991 (23.01.91), column 6, line 8 - line 20, figures 1, 6	11
X	Dialog Information Services, file 351, WPI, Dialog accession no. 004412787, WPI accession no. 85-239665/39, KADOTA, F: "Laminated paper e.g. for napkins prepd. by laying second, creped, moisture-absorbent sheet on first sheet contg. synthetic fibres", JP 60155797 A 850815 8539 (Basic)	11
A	EP, A1, 0295957 (THE PROCTER & GAMBLE COMPANY), 21 December 1988 (21.12.88), abstract, examples 1-2, table 1-2	1-22

[X] Further documents are listed in the continuation of Box C. [X] See patent family annex.

* Special categories of cited documents:
"A" document defining the general state of the art which is not considered to be of particular relevance
"E" erlier document but published on or after the international filing date
"L" document which may throw doubts on priority claim(s) or which is cited to establish the publication date of another citation or other special reason (as specified)
"O" document referring to an oral disclosure, use, exhibition or other means
"P" document published prior to the international filing date but later than the priority date claimed
"T" later document published after the international filing date or priority date and not in conflict with the application but cited to understand the principle or theory underlying the invention
"X" document of particular relevance: the claimed invention cannot be considered novel or cannot be considered to involve an inventive step when the document is taken alone
"Y" document of particular relevance: the claimed invention cannot be considered to involve an inventive step when the document is combined with one or more other such documents, such combination being obvious to a person skilled in the art
"&" document member of the same patent family

Date of the actual completion of the international search	Date of mailing of the international search report
14 January 1994	19 -01- 1994
Name and mailing address of the ISA/ Swedish Patent Office Box 5055, S-102 42 STOCKHOLM Facsimile No. +46 8 666 02 86	Authorized officer Agneta österman Wallin Telephone No. +46 8 782 25 00

INTERNATIONAL SEARCH REPORT

International application No.
PCT/SE 93/00827

C (Continuation). DOCUMENTS CONSIDERED TO BE RELEVANT

Category*	Citation of document, with indication, where appropriate, of the relevant passages	Relevant to claim No.
A	EP, A1, 0264676 (MIRA LANZA S.P.A.), 27 April 1988 (27.04.88) --	1-22
A	GB, A, 2103998 (KIMBERLEY-CLARK CORPORATION), 2 March 1983 (02.03.83) --	1-22

INTERNATIONAL SEARCH REPORT

Information on patent family members

27/11/93

International application No.
PCT/SE 93/00827

Patent document cited in search report	Publication date	Patent family member(s)	Publication date
EP-A1- 0409315	23/01/91	AU-A- 5907490	24/01/91
		CA-A- 2020731	20/01/91
		JP-A- 3114832	16/05/91
EP-A1- 0295957	21/12/88	SE-T3- 0295957	
		AU-B- 609830	09/05/91
		AU-B- 636697	06/05/93
		AU-A- 1817388	22/12/88
		AU-A- 6923891	21/03/91
		DE-A- 3870721	11/06/92
		EP-A- 0456281	13/11/91
EP-A1- 0264676	27/04/88	NONE	
GB-A- 2103998	02/03/83	AU-A- 8506182	06/01/83
		DE-A- 3224430	13/01/83
		FR-A- 2508845	07/01/83
		JP-A- 58014737	27/01/83
		NL-A- 8202652	01/02/83
		US-A- 4487796	11/12/84