109-11 CROSS REFERENCE SEARCH ROOM

Dec. 19, 1939. C. J. MULLEN 2,183,819

ROBBERYPROOF WINDOW

Filed Aug. 17, 1938 2 Sheets-Sheet 1

Fig. 1

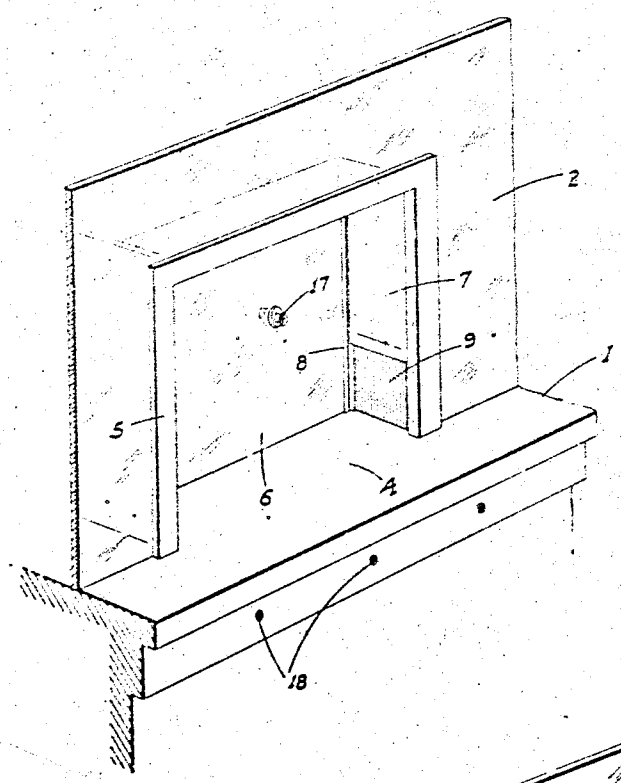

Fig. 2

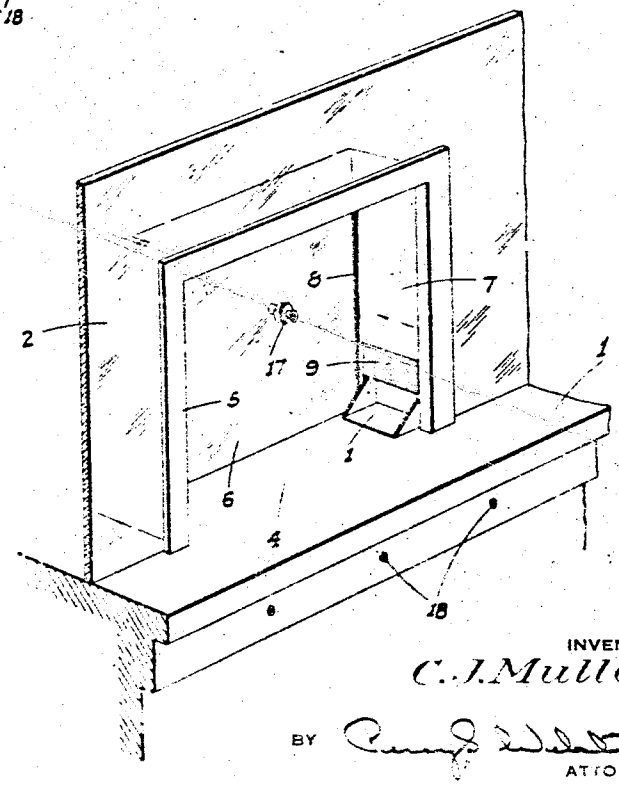

INVENTOR
C. J. Mullen

BY
ATTORNEY

Dec. 19, 1939. C. J. MULLEN 2,183,819

ROBBERYPROOF WINDOW

Filed Aug. 17, 1938 2 Sheets-Sheet 2

Fig. 3

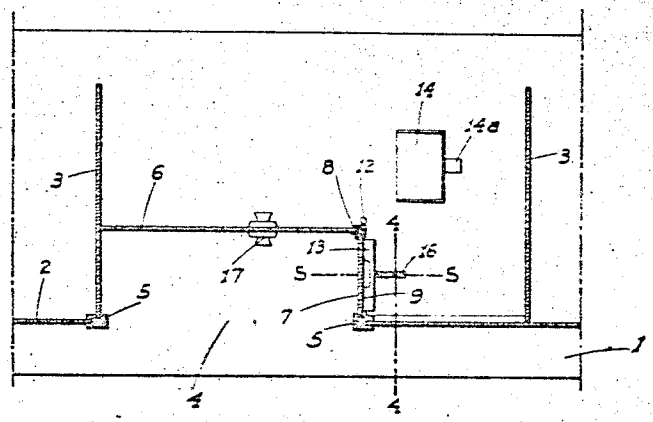

Fig. 4

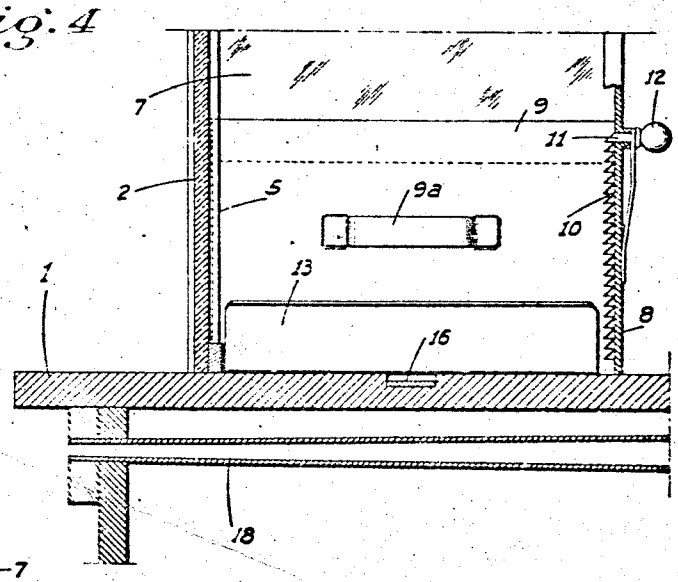

Fig. 5

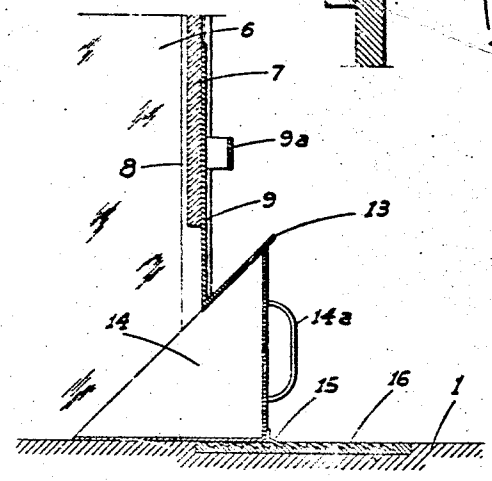

INVENTOR
C. J. Mullen
BY
ATTORNEY

Patented Dec. 19, 1939 2,183,819

UNITED STATES PATENT OFFICE

2,183,819

ROBBERYPROOF WINDOW

Chester J. Mullen, Redding, Calif.

Application August 17, 1938, Serial No. 225,432

3 Claims. (Cl. 109—19)

This invention relates in general to a robberyproof window designed for use as a bank teller's window, paymaster's window, or the like where substantial amounts of money are maintained for payment to recipients who stand on the opposite side of the window.

The principal object of the invention is to provide a robberyproof window which is so arranged that the teller can see and carry on a conversation with and pass money to a person outside the window without exposing himself to possible gunfire and without affording access to the money remaining within the window or cage.

A further object of the invention is to provide means whereby the teller within the window may safely direct gunfire at a person outside the window and attempting to commit a robbery.

A further object of the invention is to produce a simple and inexpensive device and yet one which will be exceedingly effective for the purpose for which it is designed.

These objects I accomplish by means of such structure and relative arrangement of parts as will fully appear by a perusal of the following specification and claims.

In the drawings similar characters of reference indicate corresponding parts in the several views:

Figure 1 is a perspective view of my improved robberyproof window with the wicket closed.

Figure 2 is a perspective view of the window with the wicket open and the money tray projecting thereunder.

Figure 3 is a sectional plan view of the window assembly.

Figure 4 is an enlarged, fragmentary cross section on line 4—4 of Fig. 3.

Fig. 5 is a fragmentary enlarged cross section on line 5—5 of Fig. 3.

Referring now more particularly to the characters of reference on the drawings, the numeral 1 indicates a bank counter or the like provided with one or more teller's windows which are constructed as follows:

The front panel of the window comprises a vertical sheet 2 of bullet proof glass which extends longitudinally of the counter and which is mounted in place by suitable means intermediate the edges of the counter. Each teller's window is defined or separated from the next window by transversely extending side walls or panels 3 which extend from the front panel toward the inner edge of the counter. Panels 3 also are bullet proof glass.

The front panel 2 is formed with a window opening 4 which is provided with a frame 5 fitted with the edge of said opening; the opening extending lengthwise from adjacent one side panel 3 to a point spaced some distance from the other side panel.

An enclosed niche or recess is formed inwardly of window opening 4 by means of a vertical back panel 6 which extends lengthwise of the counter, and a transversely extending end panel 7 which is fitted along one edge with the adjacent portion of frame 5 and along the other edge with a post 8 which likewise is fitted with the adjacent edge of panel 6. Panels 6 and 7 are likewise of bullet proof glass.

The end panel 7 terminates at its lower edge some distance above the counter surface and the resultant opening is normally closed by a vertically slidable bullet proof wicket plate 9 which includes a handle 9a on its inner face. The portions of frame 5 and post 8 adjacent the side edges of plate 9 are slotted vertically and said plate edges ride in these slots, as shown in detail in Figs. 4 and 5. This wicket plate is normally locked against upward movement by means of a row of upwardly facing ratchet teeth 10 cut in the edge of plate 9 which cooperates with the groove in post 8, and a spring pressed detent 11 which engages in one of said teeth. This detent has an upwardly facing bevel on its end so that the plate may lower from a raised position without interference. A hand knob 12 is formed with the detent and is accessible to the teller.

The lower edge of the wicket plate 9 is formed with an inwardly extending upwardly sloping lip 13 of substantial depth, said lip being arranged for engagement from within the window by the correspondingly sloping sides of a money tray 14. The tray includes a handle 14a by means of which the tray may be manipulated in the manner hereinafter described. At its rear lower edge the tray is provided with a downwardly and rearwardly sloping catch finger or pawl 15 adapted to cooperate with a ratchet plate 16 embedded in the surface of the counter adjacent the wicket plate.

Conversation between the teller and a person outside the window is made possible by means of combination mouthpiece and speaker phones mounted on opposite sides of panel 2 or in other desired positions; such phones being shown somewhat diagrammatically at 17.

A plurality of metal tubes 18 extend transversely of the counter and therebeneath in spaced relation along the counter; such tubes being

adapted to receive the muzzle of a pistol held by the teller. The bore of these tubes taper toward their outer ends and, if desired, the open outer ends may be concealed by a cover through which a bullet may pass.

My improved robberyproof window is used in the following manner:

The wicket plate 9 is normally closed and locked in such position by means of the spring pressed detent 11. When a customer approaches the window and is known to the teller, the teller grasps knob 12 in his right hand and draws the detent 11 away from the path of teeth 10. At the same time he grasps handle 9a and slides wicket plate 9 upward to an open position. When desired catch means may be employed to hold wicket plate 9 open while the business of the customer is being transacted.

However, when a person unknown to the teller approaches the window the wicket plate 9 is left closed and if monies are to be transferred the teller places such monies in tray 14 and grasps the handle of the tray with his left hand and at the same time grasps knob 12 with his right hand and releases the detent. Then the upwardly sloping edges of the tray are engaged with the under surface of lip 13 on the wicket plate, and by pressing forwardly on the tray the wicket plate is forced upwardly as shown in Fig. 2, and the customer can then take the money from the tray. In order to prevent anyone from forcing the tray out of the way and reaching into the window or cage during a money transfer operation, I provide the finger 15 which engages with the teeth of ratchet plate 16 which is embedded in the surface of the counter. When the transaction has been completed the teller lifts the rear end of the tray slightly and withdraws the tray from beneath the wicket plate 9 and with such withdrawal the wicket plate returns to its normal closed position.

With my improved robberyproof window the teller is fully protected and it is impossible for a bandit to either gain access into the interior of the window or to harm the teller. Such protection is enhanced by the placing of the wicket at one side of instead of directly back of the window since the wicket is thus out of a direct line between the teller and the person outside the window.

If desired, the front panel 2 may be extended any height and further, a grill or the like n be placed over the top of the teller's window cage.

From the foregoing description it will be reac seen that I have produced such a device as si stantially fulfills the objects of the invention set forth herein.

While this specification sets forth in detail t present and preferred construction of the devi still in practice such deviations from such det may be resorted to as do not form a departu from the spirit of the invention, as defined by t appended claims.

Having thus described my invention, what claim as new and useful and desire to secure Letters Patent is:

1. In a robberyproof window, an upstandi panel of bullet proof material, said panel i cluding a normally closed but upwardly slidal wicket plate, a tray, means between the wick plate and the tray arranged to raise the pla upon movement of the tray up to and thence b neath the plate and manually releasable lat means normally holding the wicket plate again upward movement.

2. In a robberyproof window, an upstandi panel of bullet proof material, said panel i cluding a normally closed but upwardly slidab wick plate, a tray having sides sloping upward and rearwardly from its forward edge to the ba end of the tray, and a relatively long projectir lip formed on the lower edge of the wicket pla and sloping upwardly in corresponding angul relation to the sides of the tray whereby to rai the wicket plate upon movement of the tray u to and thence beneath said plate.

3. In a robberyproof window, an upstandin panel of bullet proof material, said panel in cluding a normally closed but upwardly slidabl wicket plate, a tray, means between the wicke plate and tray arranged to raise the plate upo movement of the tray to and thence beneath th plate and releasable means to prevent retractio of the tray from beneath the wicket plate an functioning before the back of the tray reache said wicket plate.

CHESTER J. MULLEN.