(No Model.) 5 Sheets—Sheet 1.

T. McDOWELL.

PRINTING MACHINE.

No. 456,368. Patented July 21, 1891.

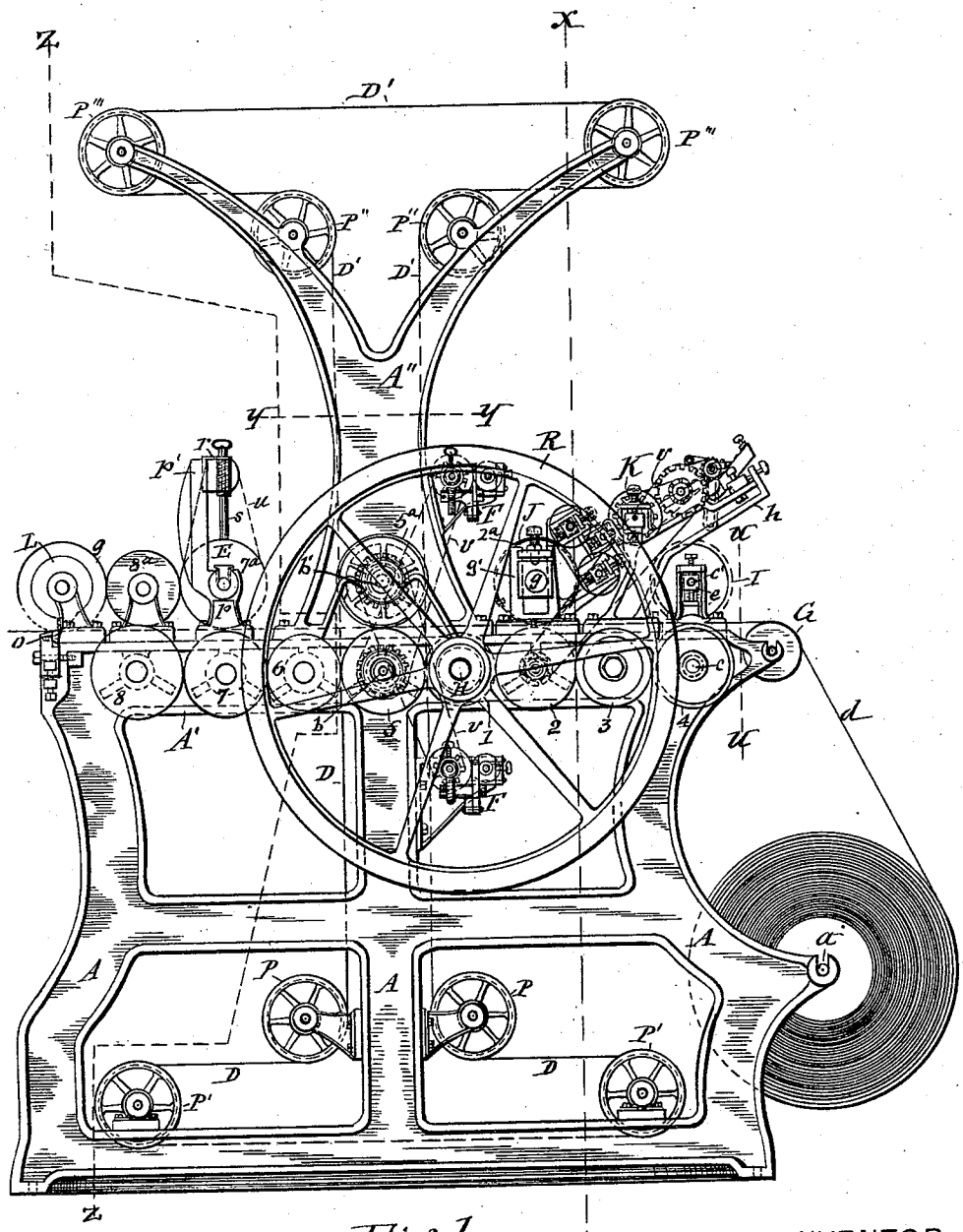

Fig. 1

WITNESSES:

A. F. Walz

J. J. Laass.

INVENTOR:

Thomas McDowell

By Dewey, Laass & Dewey

his ATTORNEYS.

THE NORRIS PETERS CO., PHOTO-LITHO., WASHINGTON, D. C.

(No Model.)

5 Sheets—Sheet 2.

T. McDOWELL.

PRINTING MACHINE.

No. 456,368. Patented July 21, 1891.

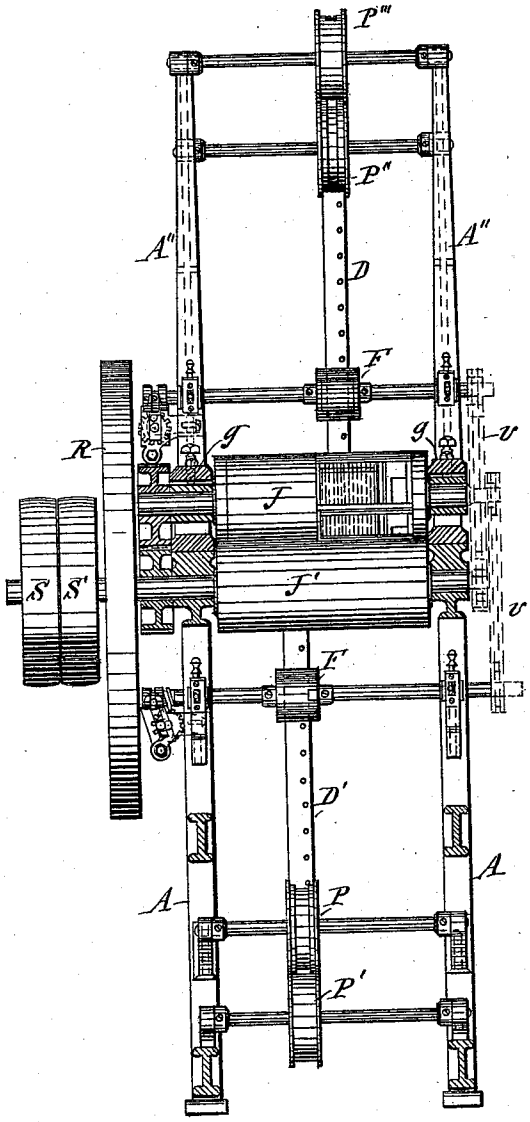

Fig. 2.

WITNESSES:

A. F. Walz

J. J. Laass.

INVENTOR:

Thomas Mc. Dowell

By Dewitt, Laass & Dewitt

his ATTORNEYS.

THE NORRIS PETERS CO., PHOTO-LITHO., WASHINGTON, D. C.

(No Model.) 5 Sheets—Sheet 3.

T. McDOWELL.

PRINTING MACHINE.

No. 456,368. Patented July 21, 1891.

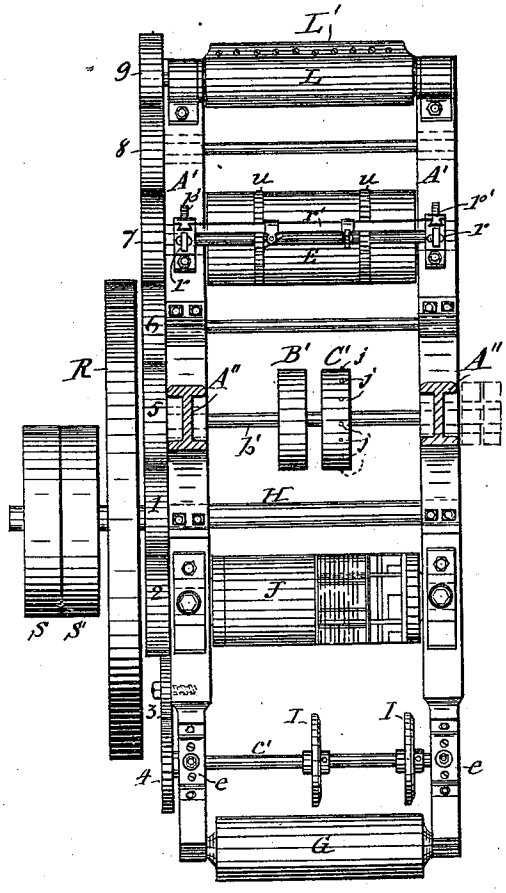

Fig. 3

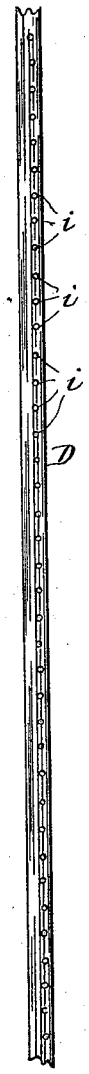

Fig. 7

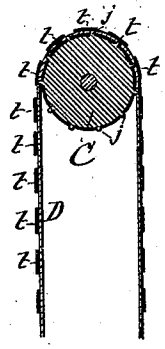

Fig. 8

WITNESSES:

A. F. Walz

J. J. Laasz

INVENTOR:

Thomas McDowell

By Duell, Laass & Duell

his ATTORNEYS.

THE NORRIS PETERS CO., PHOTO-LITHO., WASHINGTON, D. C.

(No Model.) 5 Sheets—Sheet 4.

T. McDOWELL.

PRINTING MACHINE.

No. 456,368. Patented July 21, 1891.

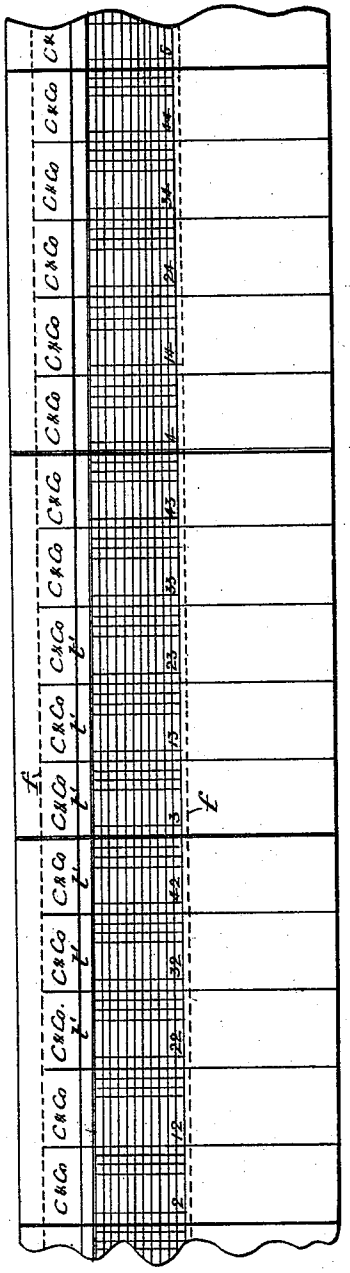

Fig. 4.

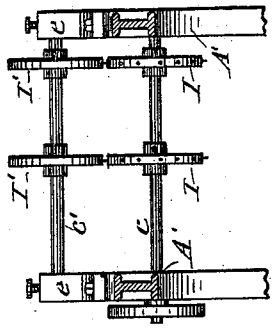

Fig. 10.

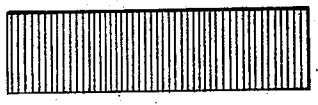

Fig. 6.

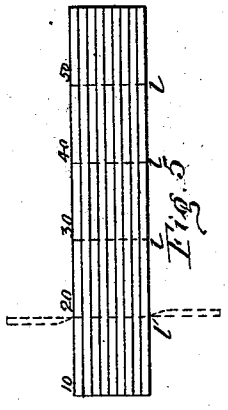

Fig. 5.

WITNESSES:

A. F. Walz

J. L. Laasz.

INVENTOR:

Thomas McDowell

By Dell, Laass & Dell

his ATTORNEYS.

THE NORRIS PETERS CO., PHOTO-LITHO., WASHINGTON, D. C.

(No Model.) 5 Sheets—Sheet 5.

T. McDOWELL.

PRINTING MACHINE.

No. 456,368. Patented July 21, 1891.

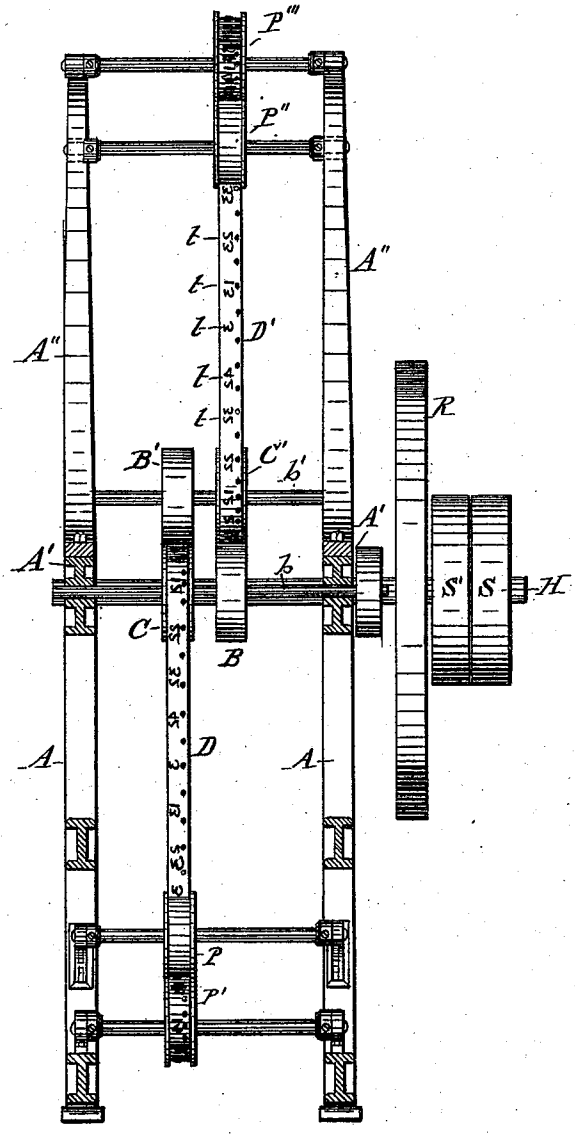

Fig. 9.

WITNESSES:

A. F. Walz

J. J. Laasz

INVENTOR:

Thomas McDowell

By Duell, Laasz & Duell

his ATTORNEYS.

THE NORRIS PETERS CO., PHOTO-LITHO., WASHINGTON, D. C.

UNITED STATES PATENT OFFICE.

THOMAS McDOWELL, OF NIAGARA FALLS, NEW YORK.

PRINTING-MACHINE.

SPECIFICATION forming part of Letters Patent No. 456,368, dated July 21, 1891.

Application filed November 3, 1890. Serial No. 370,248. (No model.)

To all whom it may concern:

Be it known that I, THOMAS MCDOWELL, a subject of the Queen of Great Britain, and a resident of Niagara Falls, in the county of Niagara, in the State of New York, have invented new and useful Improvements in Printing-Machines, of which the following, taken in connection with the accompanying drawings, is a full, clear, and exact description.

This invention is designed for the manufacture of duplicate memorandum-books or sale-slips, which are used with a carbon-sheet placed between the adjacent leaves of the book, which carbon-sheet transfers to the underlying leaf an exact copy of the memorandum written upon the top leaf. Each pair of such memorandum-leaves is numbered alike and upon both sides. All of the memorandum-leaves are usually provided with one or more rows of perforations across them to facilitate the operation of separating them from the book.

This invention consists in a novel organization of a machine which is comparatively simple and inexpensive and capable of performing very expeditiously the aforesaid operation of perforating and printing upon both sides the web of paper in its passage through the machine, and which prints and cuts the web of paper in sections, each of which comprises a set of the leaves of the book to be formed, and said sets are so numbered that by piling them in regular order one upon the other, and then cutting through the pile on lines between the leaves contained in the top section and then again piling the divisions of said sections one upon the other the leaves become arranged in a tier, in which they appear with their numbers in regular consecutive order and are in condition to be bound into book form.

The invention is fully illustrated in the annexed drawings, in which—

Figure 1 is a side elevation of a printing-machine embodying my invention. Fig. 2 is a vertical transverse section on line x x, Fig. 1. Fig. 3 is a horizontal transverse section on line y y, Fig. 1. Fig. 4 is an enlarged plan view of the web of paper, showing its form as delivered from the printing-machine. Fig. 5 is a side view of a tier of the sections of the printed paper, illustrating the manner in which said sections are to be piled preparatory to cutting them up into separate leaves. Fig. 6 is a side view of said leaves piled ready to be bound into book form. Fig. 7 is a rear face view of a section of one of the printing-bands. Fig. 8 is a sectional view of said band and wheel upon which it travels; and Figs. 9 and 10 are vertical transverse sections respectively on lines z z and U U, Fig. 1.

Similar letters of reference indicate corresponding parts.

The mechanism of the machine is mounted stationary on a supporting-frame consisting of two pedestals A A, which are formed on their tops with parallel horizontal side plates A′ A′, and upon the latter are mounted two standards A″ A″, which are bifurcated or terminated with diverging arms extending toward opposite ends of the machine, as shown in Fig. 1 of the drawings. A shaft b is extended horizontally across the aforesaid frame and journaled in suitable bearings in the plates A′ A′, and to one end of this shaft is secured a gear-wheel 5, which meshes with a pinion 1, fastened to the main driving-shaft H, which is mounted in suitable bearings secured to the frame. Above the shaft b and parallel therewith is a similar shaft b', journaled in bearings in the standards A″ A″. To the lower shaft b, at different points in the length thereof, are fastened a platen-wheel B and printing-band wheel C, so as to rotate with the shaft. On the upper shaft b' are firmly mounted a printing-band wheel C′ and a platen-wheel B′, facing, respectively, the platen-wheel B and wheel C, and disposed at opposite sides of the line of travel of the paper to be printed. Upon the faces of the wheels C and C′, adjacent to the platen-wheels, travel, respectively, the endless printing-bands D D′, which are composed of thin steel or brass or other suitable material and extend, respectively, from the lower wheel C around pulleys P P and P′ P′ on shafts journaled in suitable bearings attached to the pedestals A A, and from the wheel C′ around pulleys P″ P″ and P‴ P‴, similarly supported on the standards A″ A″. The wheel C receives continuous rotary motion from the main driving-shaft H by means of the gear-wheel 5 and pinion 1,

and a corresponding rotary motion is transmitted to the wheel C′ by a gear-wheel 5ª, attached to the shaft of said wheel and meshing with the gear-wheel 5. To compel the printing-bands D D′ to travel longitudinally they are provided with perforations *i i i* throughout their lengths, and the wheels C C′ are each provided with spurs *j j*, projecting from their peripheries and entering the perforations of the printing-bands. The aforesaid platen-wheels are preferably provided with rubber facings to protect the types on the printing-bands.

R represents a balance-wheel on the main driving-shaft H, and S and S′ denote, respectively, the loose and tight pulleys mounted on said shaft and carrying the belt which transmits motion from the motor to the said printing-machine. In order to print the numbers on the web of paper so as to arrange them in sets on successive sections of the web of paper preparatory to separating said sections and subsequently subdividing the same, as hereinbefore stated, I distribute the numbering-types *t t t* over the lengths of the bands D D′ and arrange them in sets of equal number of types and the types of each set in arithmetical progression, stepped numerically at a rate equal to the number of sets capable of being printed in a single transit of the entire length of the printing-band. The numbers of each succeeding set thus follow individually in regular arithmetical order the numbers of the preceding set. For exemplification of this arrangement of the numbering types I have shown in the annexed drawings a section of a printing-band having its types disposed in sets of five types each, the first set comprising the numbers 1 11 21 31 41, the second set consisting of the numbers 2 12 22 32 42, the third set beginning with 3 13 and continuing at that rate to 43, and in this manner the numbers of the successive sets are arithmetically raised. In the illustrated example the machine is arranged for the manufacture of books composed of fifty double leaves, and therefore ten of the aforesaid sections are required to make a book. The aforesaid sections of the web of paper are severed from each other as they issue from the delivering end of the machine by means of a suitable paper-cutting knife arranged movably across the line of travel of the paper at the aforesaid end of the machine. I preferably employ a knife L′, secured lengthwise to a cylindrical carrier L, journaled to the delivering end of the frame of the machine and receiving rotary motion from a train of gears hereinafter described. As the severed sections of the web of paper issue from the machine they are piled successively one upon the other, as represented in Fig. 5 of the drawings. The sections containing the lower numbers, issuing in advance of those containing the higher numbers, bring the section having numbers 50 40 30 20 10 on top of the tier, the subjacent section containing the numbers 49 39 29 19 9, and so on to the bottom section of the tier, which contains the numbers 41 31 21 11 10. Then by cutting through the tier on lines between the numbers on the top section, as represented by dotted lines 1 1 in Fig. 5 of the drawings, and piling the divisions in regular order one upon the other, as represented in Fig. 6 of the drawings, the said divisions, which are separate duplicate leaves, become arranged in regular consecutively-numbered order in which they are to be blocked or bound into book form.

F F represent the usual and well-known inking devices arranged to apply the ink to the printing-bands D D′. Inasmuch as I do not limit myself to any specific means for accomplishing this purpose, it is unnecessary to describe the same in detail.

a represents the shaft of the roller, upon which is wound the web of paper to be printed, said shaft being mounted in suitable bearings on the pedestals A A at the feed end of the machine. To the same end of the plates A′ A′ is journaled horizontally a guide-roller G, over which the web of paper passes, as indicated at *d* in Fig. 1 of the drawings.

c represents a shaft extended horizontally across the frame and journaled in suitable bearings in the side plates A′ A′ of the frame. Above the shaft *c* and parallel therewith is another shaft *c′*, journaled in boxes sustained in pillow-blocks *e e*, which are firmly mounted on the side plates A′ A′. To one of these shafts are secured two wheels I I, the peripheries of which are in the path of the web of paper and have a series of pins or short knife-blades projecting from them. On the other of the said shafts are mounted two wheels I′ I′, which are in the same vertical plane with the wheels I I and have their peripheries in close proximity thereto, as illustrated in Fig. 10 of the drawings. These wheels form two rows of perforations across the paper, which passes between the two sets of wheels, said rows of perforations being represented at *f f* in Fig. 4 of the drawings. These perforating-wheels may be arranged either at the rear or front of the part of the machine at which the printing-bands D D′ print the numbers on the paper. Between this latter part of the machine and feed end of the machine I employ a rotary printing cylinder or wheel J over the line of travel of the paper and axially at right angles thereto, and under said line of travel and axially parallel with the printing-cylinder J, I arrange a rotary cylindrical platen J′. Said printing-cylinder has its shaft *g* journaled in boxes sustained in pedestals *g′*, secured to the top of the side plates A′ A′, and from said pedestals extends a frame *h*, on which is mounted the inking device K for applying ink to the types of the cylinder J. This cylinder prints upon the paper the head-

ing *t* and the usual lines. (Shown in Fig. 4 of the drawings.)

E E represent two cylinder disposed horizontally across the top and bottom of the passage of the paper near the delivering end of the machine and with their peripheral faces in contact with the paper. The lower of said cylinders has its shafts or trunnions journaled in bearings in the side plates A′ A′, and the upper of said cylinders has its journals supported in boxes mounted in posts *p p*, secured to the top of the side plates A′ A′. The purpose of these cylinders is to draw the web of paper through the machine, and in order to insure this action by proper contact of the cylinder with the paper I form the posts *p p* with upward-extending guides *p′ p′*, on which slide vertically blocks *r r*, supported adjustably by screw-posts *s s*, passing vertically through said blocks and resting on the posts *p p* or boxes seated therein. On the blocks *r r* is pivoted a cylindrical cross-bar *r′*, over which pass endless rubber bands *u u*, which embrace the bottom and sides of the upper cylinder E, and by contact with the paper passing between the cylinders the forward draft of the paper is insured. By raising the blocks *r r* on the posts *p p* the bar *r′* is lifted with them, and thus the tension of the rubber bands *u u* is increased, as may be required. The printing-cylinder J, its platen J′, perforating-wheels I I′, paper-moving cylinders E E, and knife-carrier L are caused to rotate in unison with the printing-band-carrying wheels C′ C′ by means of a train of gearing 1, 2, 2ª, 3, 4, 5, 6, 7, 7ª, 8, 8ª, and 9, as indicated by plain circles in Fig. 1 of the drawings. The inking-rollers may be driven by sprocket-chains *v v*, running on sprocket-wheels on either of the shafts journaled in bearings on the main frame and on the shaft of one of the rollers of the inking devices. To insure a smooth cut of the rotary knife L′, I secure across the end of the frame, directly under the knife-carrier L′, a stationary knife *o*, as represented in Fig. 1 of the drawings.

Having described my invention, what I claim as new, and desire to secure by Letters Patent, is—

1. A machine for printing a continuous web of paper simultaneously upon opposite sides, comprising rotary platen-wheels above and below the line of travel of the paper and in different positions in the width of said travel, printing-band wheels facing said platen-wheels and journaled to the stationary frame, carrying-pulleys arranged in sets above and below the passage of the paper, printing-bands carried on said band-wheels and pulleys, and mechanism imparting continuous rotary motion to the printing-band wheels and platen-wheels, as set forth.

2. In a machine for printing a continuous web of paper simultaneously upon opposite sides, the combination, with the stationary supporting-frame, of two horizontal shafts disposed one directly over the other with the travel of the paper between them and journaled to the stationary frame at right angles to the line of said travel, a platen-wheel and a printing-band wheel on each of said shafts and facing, respectively, a coacting printing-band wheel and a platen-wheel on the other of said shafts, two sets of pulleys, respectively above and below the aforesaid shafts, two printing-bands, each carried on one of the sets of pulleys and one of the aforesaid band-wheels, paper-drawing rolls pivoted to the frame near the delivering end of the machine, and a train of gears imparting a continuous rotary motion to the printing-band wheels, platen-wheels, and paper-drawing rolls, as set forth.

3. A machine for printing paper upon both sides simultaneously, comprising a main frame, a horizontal paper-roll, and a horizontal paper-guiding roller journaled to one end of the frame, a paper-dividing knife secured to a carrier mounted on the opposite end of the frame, printing-band wheels above and below the line of travel of the paper and axially horizontally and at right angles to said line of travel, platen-wheels opposite said printing-band wheels, printing-bands running on said wheels, a printing-cylinder and a platen-cylinder in the line of travel of the paper near one end of the frame, paper-drawing rolls near the delivering end of the machine, and a train of gears transmitting motion from the main driving-shaft to the aforesaid printing-cylinder, its platen-cylinder, one of the printing-band wheels, and the platen-wheel on the same shaft, and the knife-carrier, substantially as described and shown.

4. The combination of the main frame, consisting of the pedestals A A, horizontal plates A′ A′, and standards A″ A″, rising from said plates, the paper-roll shaft *a*, journaled horizontally to one end of said pedestals, the pulleys P P and P′ P′, mounted on shafts journaled in bearings on the pedestals, pulleys P″ P″ and P‴ P‴, mounted on shafts similarly supported on the standards, the shaft *b*, journaled to the plates A′ A′, the platen-wheel B and printing-band wheel C, mounted on said shaft, the shaft *b′*, journaled to the standards A″ A″, the platen-wheel B′ and printing-band wheel C′, mounted on the latter shaft and respectively directly over the printing-band wheel and platen-wheel of the shaft *b*, the printing-band D, traveling on the wheel C and on the pulleys P P and P′ P′, the printing-band D′, traveling on the wheel C′ and on the pulleys P P and P′ P′, the printing-band D′, traveling on the wheel C′ and on the pulleys P″ P″ and P‴ P‴, the guide-roller F, journaled to the plates A′ A′ above the paper-roll, the main shaft H, mounted in bearings on the press-frame, the pinion 1, secured to

said main shaft, the shaft *c*, journaled to the press-frame, perforating-wheels I I, and gear-wheel 4, secured to said shaft, the knife-carrier L, journaled to the delivering end of the frame of the machine, and a train of gears transmitting motion from the pinion 1 to the aforesaid shafts *b c* and knife-carrier L, substantially as described and shown.

In testimony whereof I have hereunto signed my name this 24th day of October, 1890.

THOS. McDOWELL. [L. S.]

Witnesses:
JAMES BRUYOUGH,
JOHN RAE DICKSON.