(No Model.) 2 Sheets—Sheet 1.

T. WEINHART.

BOILER FURNACE.

No. 598,061. Patented Jan. 25, 1898.

Fig. 1

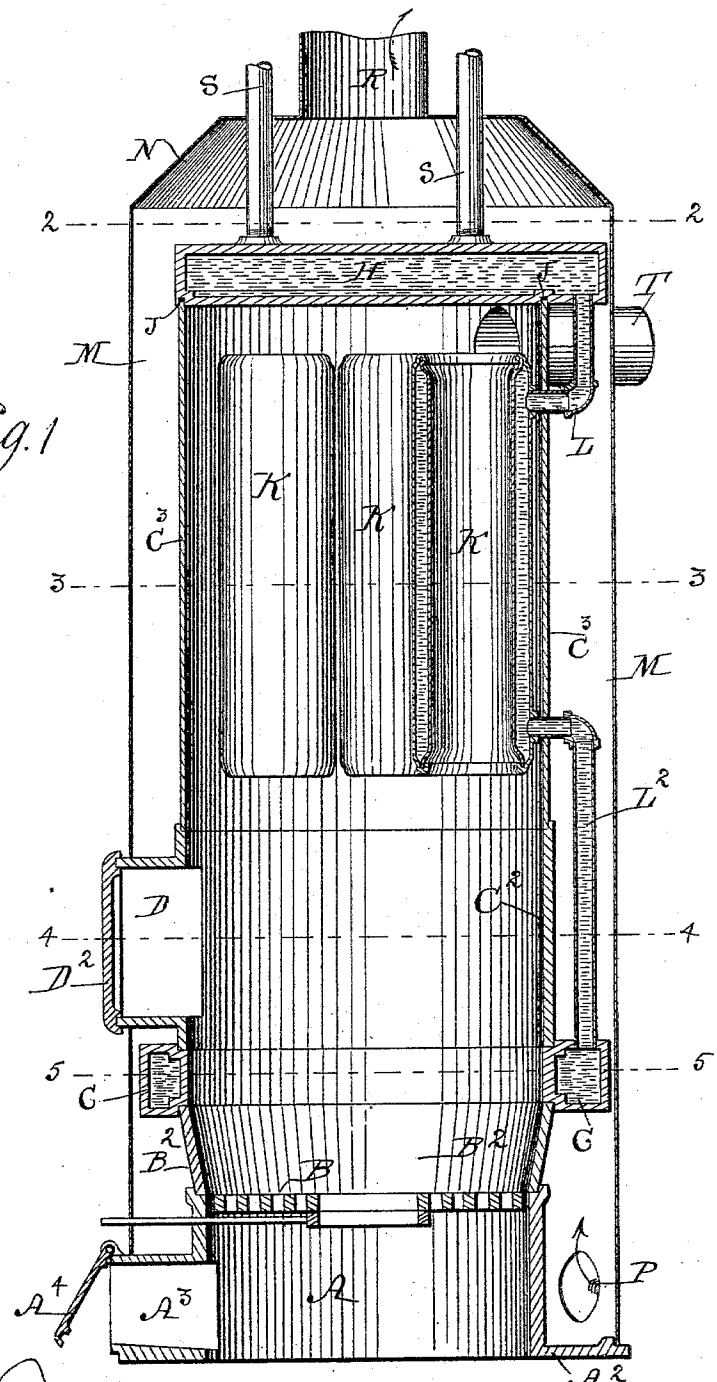

Witnesses:
J. A. Bramhall.
Jas. Barels.

Inventor: Theodore Weinhart,
By Thomas G. and J. Ralph Orwig,
attorneys.

THE NORRIS PETERS CO., PHOTO-LITHO., WASHINGTON, D. C.

(No Model.) 2 Sheets—Sheet 2.

T. WEINHART.

BOILER FURNACE.

No. 598,061. Patented Jan. 25, 1898.

Fig. 2

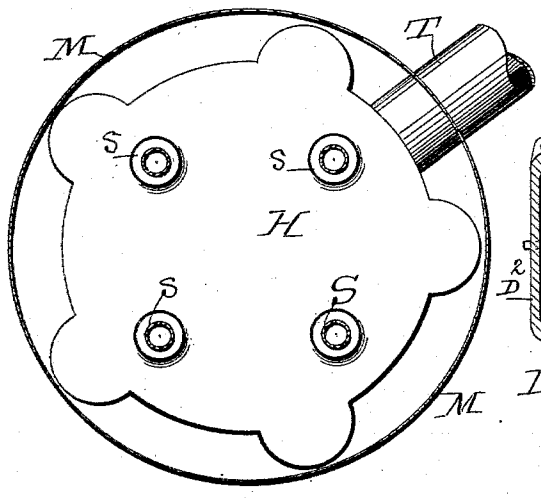

Fig. 4

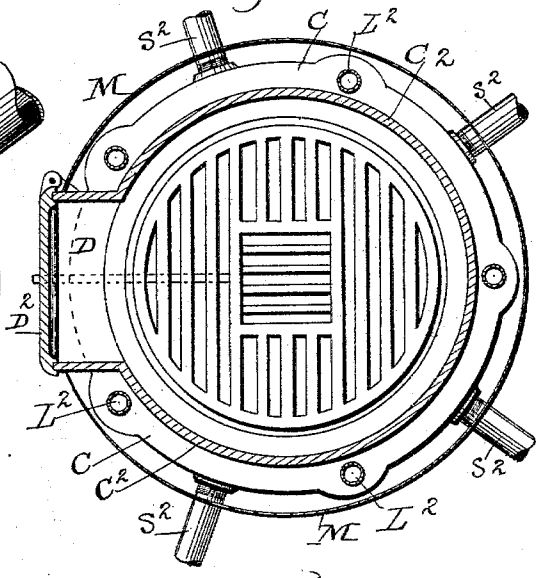

Fig. 3

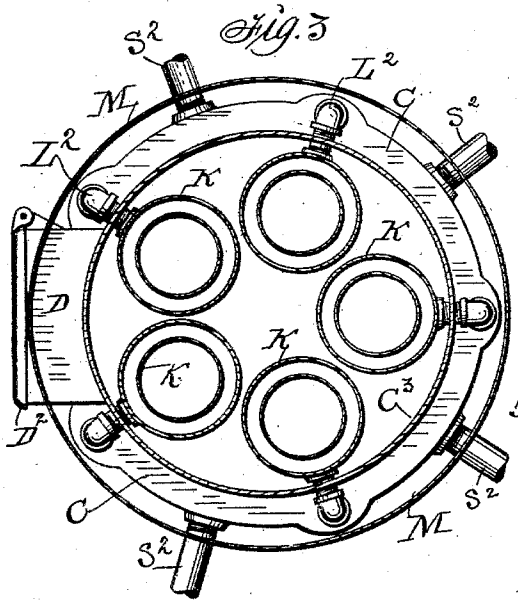

Fig. 5

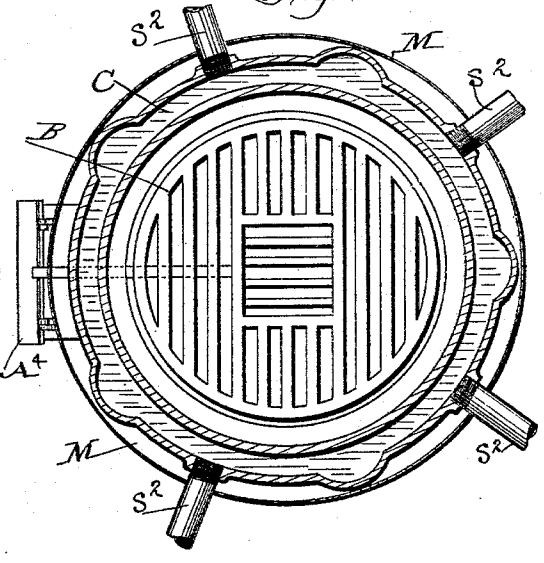

Witnesses:
J. A. Bramhall
Jas. Barels.

Inventor: Theodore Weinhart,
By Thomas G. & J. Ralph Orwig,
Attorneys.

THE NORRIS PETERS CO., PHOTO-LITHO., WASHINGTON, D. C.

UNITED STATES PATENT OFFICE.

THEODORE WEINHART, OF BOONE, IOWA, ASSIGNOR OF ONE-THIRD TO L. D. MONTGOMERY AND C. C. CORNELL, OF SAME PLACE.

BOILER-FURNACE.

SPECIFICATION forming part of Letters Patent No. 598,061, dated January 25, 1898.

Application filed June 8, 1897. Serial No. 639,827. (No model.)

To all whom it may concern:

Be it known that I, THEODORE WEINHART, a citizen of the United States, residing at Boone, in the county of Boone and State of Iowa, have invented a new and useful Boiler-Furnace, of which the following is a specification.

My object is to provide an improved boiler-furnace to utilize the heat radiated from the outside surface of a furnace and a boiler in the furnace for heating compartments in a building with hot air at the same time that steam and hot water are conveyed from the boiler and circulated and utilized by means of radiators located in various places throughout the same building, and a further object contemplated is to save fuel and reduce the cost of heating a building.

My invention consists in the construction, arrangement, and combination of a fire-pot, a ring-shaped boiler-section, a combustion-chamber, a flat boiler-section, open-ended boiler-sections, an annular hot-air chamber, a grate and a base, as hereinafter set forth, pointed out in my claims, and illustrated in the accompanying drawings, in which—

Figure 1 is a vertical sectional view showing the form of the furnace, a section of the boiler at the top of the fire-pot, a section of the boiler at the top of the combustion-chamber, and a plurality of boiler-sections suspended in the top portion of the combustion-chamber. Fig. 2 is a view looking downward from the line 2 2 in Fig. 1 upon the top of the boiler-section at the top of the combustion-chamber. Fig. 3 is a transverse sectional view through the line 3 3 in Fig. 1, showing the group of circular boiler-sections that are suspended in the top portion of the combustion-chamber. Fig. 4 is a view looking down from the line 4 4 in Fig. 1, showing the grate in the bottom of the fire-pot and the door above the fire-pot through which fuel is introduced. Fig. 5 is a sectional view looking down from the line 5 5 through the lower boiler-section at the top of the fire-pot and shows the grate in the bottom of the fire-pot and a door leading to the ash-chamber under the grate.

The letter A designates the base of the furnace, preferably circular in shape and cast complete in one piece and provided with a horizontal flange A^2 at its bottom and a doorway A^3, to which a door A^4 is hinged in any suitable way, as required, to close the ash-pit within the base.

B is a grate supported upon an annular shoulder at the top portion of the base A, as shown in Fig. 1, or in any suitable way.

B^2 is a fire-pot fitted above the base A.

C is a ring-shaped boiler-section fitted to the top of the fire-pot by means of an annular shoulder at the inner lower edge of the ring-shaped section in such a manner that the section will project outward and upward from the top of the fire-pot. It also has a corresponding annular shoulder at its inner top edge, adapting it to receive the lower edge of the combustion-chamber.

C^2 is a cast-metal portion of the combustion-chamber fitted on top of the ring-shaped boiler-section C, and C^3 is a vertical sheet-metal extension of the combustion-chamber fitted on top of the cast-metal portion C^2.

D is a doorway in the cast-metal portion C^2, and D^2 is a door hinged thereto, as required, to open and close the doorway.

H is a flat circular boiler-section fitted to the top of the sheet-metal portion C^3 of the combustion-chamber. It is preferably cast complete in one piece and provided with an annular groove J, that admits the top edge of the sheet-metal top portion of the combustion-chamber and also allows suitable cement or asbestos packing to be placed in the groove to produce an air-tight and durable annular joint.

A plurality of double-walled and open-ended boiler-sections K are suspended in a group within the upper portion of the combustion-chamber by means of pipes L, at their top portions connected with their upper end portions and also connected with the flat circular boiler-section H, as clearly shown in Fig. 1, or in any suitable way, so as to retain them in proper position to allow communication with the section H and also in such a manner as to allow products of combustion to pass through their open centers and envelop their outer surfaces, so as to subject water within them to the heat rising from the furnace.

The lower end portion of each boiler-section K is connected with the ring-shaped boiler-section C by means of a pipe L^2, as shown in Fig. 1, or in any suitable way to aid in supporting the section and establishing communication with the section C, as required to allow the circulation of water and steam.

M is a wall, preferably sheet metal, fitted to an annular shoulder on top of the flange A^2 at the bottom of the base A to extend upward in concentric position with the base A, fire-pot B, and combustion-chamber C^2 and C^3 to produce an annular hot-air chamber.

N is the fixed top of the hot-air chamber.

P is an opening in the bottom of the chamber through which cold air is admitted.

R is a pipe through which heated air is allowed to pass upward to be distributed therefrom to heat compartments in a building.

Pipes S are connected with the flat top of the top boiler-section H for circulating and distributing steam and water and heat through radiators located in different parts of the building, as required, to radiate heat therefrom to warm the building.

T is a pipe connected with the top of the combustion-chamber and extended out through the wall M to be connected with a flue or chimney, as required, to carry off the waste products of combustion and to produce a furnace-draft.

In the practical use of my invention when there is fuel burning in the furnace products of combustion envelop the outside and also the inside of each boiler-section K, suspended in the top portion of the combustion-chamber, at the same time that the boiler-section H is subjected to the same volume of heat that passes up, around, and through the section C at the base of the combustion-chamber, and the walls C^2 and C^3 are also subjected to the heat that rises from the burning fuel and aid in absorbing and conveying and utilizing all the valuable products of combustion liberated by fire from the fuel placed in the furnace by storing heat in all the sections of the boiler and also storing heat in the annular hot-air chamber that surrounds the combustion-chamber in such a manner that steam and hot water and also hot air can be circulated through different conveying-pipes and radiators at the same time.

I claim as my invention—

1. In a boiler-furnace, a ring-shaped boiler-section having an annular shoulder at its inner bottom edge and an annular shoulder at its inner top edge, in combination with a fire-pot and a combustion-chamber and boiler-sections suspended within the combustion-chamber as and for the purposes stated.

2. In a boiler-furnace, a fire-pot having a grate at its bottom, a ring-shaped boiler-section fitted to the outside top edge of the fire-pot, a combustion-chamber fitted to the ring-shaped boiler-section, a flat boiler-section on top of the combustion-chamber, one or more open-ended boiler-sections suspended in the combustion-chamber and connected with the ring-shaped boiler-section and the flat boiler-section, all arranged and combined to operate in the manner set forth, for the purposes stated.

3. A furnace for heating and circulating water and steam and also heating and circulating air in a building, comprising a base and ash-chamber, a fire-pot and grate above the ash-chamber, a ring-shaped boiler-section fitted to the top of the fire-pot, a combustion-chamber fitted to the top of the ring-shaped boiler-section and provided with a passage-way and door, a flat boiler-section fitted to the top of the combustion-chamber and pipes connected therewith for circulating water and steam, a plurality of open-ended boiler-sections suspended inside of the combustion-chamber, pipes connecting the open-ended sections with the flat boiler-section, pipes connecting the open-ended sections with the ring-shaped section, a wall around the ash-pit the fire-pot and the combustion-chamber and a top on said wall to produce a hot-air chamber, an opening in the bottom of the wall to admit cold air, a pipe at the top to convey hot air, and a pipe extending outward from the top of the combustion-chamber through the hot-air chamber and outer wall, all arranged and combined to operate in the manner stated.

THEODORE WEINHART.

Witnesses:
C. C. CORNELL,
L. D. MONTGOMERY.