Sept. 17, 1940. C. E. SWARTZ ET AL 2,215,278

TIN COATING PROCESS

Filed Jan. 21, 1938

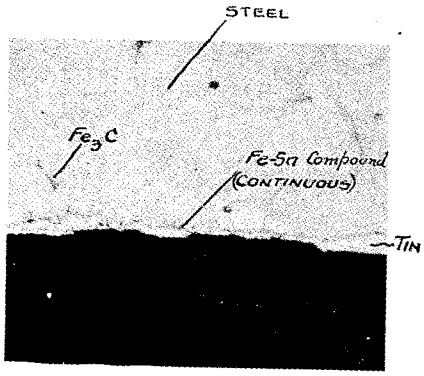

Fig. 2

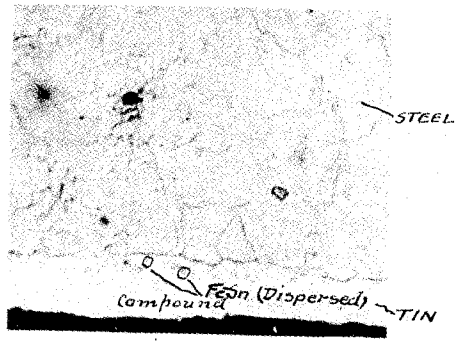

Fig. 4

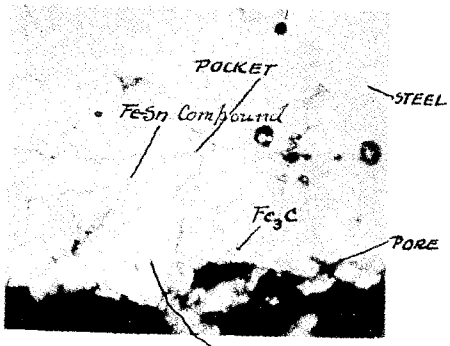

Fig. 3

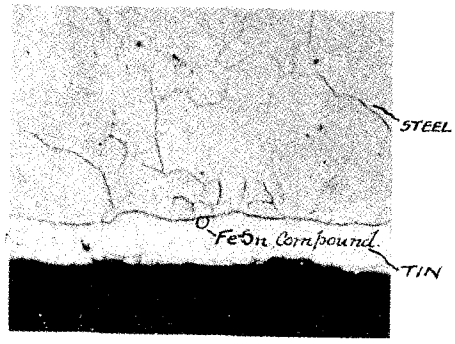

Fig. 5

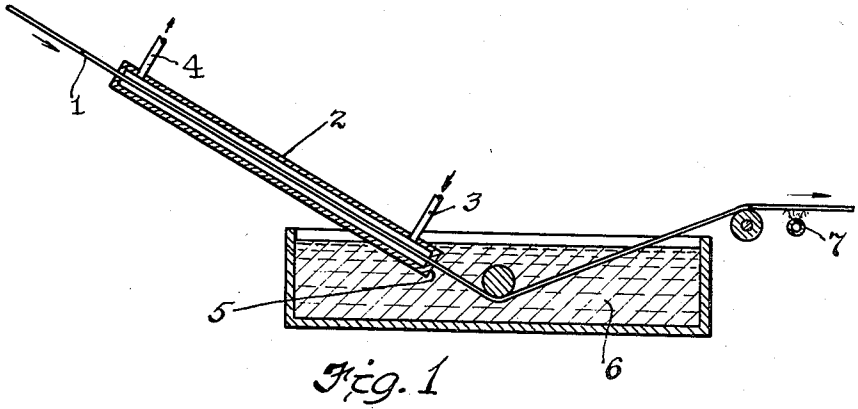

Fig. 1

INVENTORS
Carl E. Swartz and
Donald L. V. Schwartz
BY Jay, Oberlin & Jay
ATTORNEYS.

Patented Sept. 17, 1940 2,215,278

UNITED STATES PATENT OFFICE

2,215,278

TIN COATING PROCESS

Carl E. Swartz, Cleveland Heights, and Donald L. V. Schwartz, Cleveland, Ohio, assignors to The Cleveland Graphite Bronze Company, Cleveland, Ohio, a corporation of Ohio

Application January 21, 1938, Serial No. 186,158

9 Claims. (Cl. 91—70.3)

The present invention relates to a method of coating ferrous metals, such as steel and iron, with tin. The general object and nature of our invention is to provide a tin coating process which, as compared to any one heretofore known or used, is productive of a highly improved bond between the tin and the ferrous metal and at the same time eliminates several steps and operations.

In the bonding or coating of dissimilar metals, the two most essential factors are, first, a preparation of the surface of the metal which is to be coated, or to which the lower melting point metal is to be applied, by an adequate mechanical and/or chemical cleaning thereof; and secondly, the temperature at which the two metals are placed in contact.

We have discovered that a certain method of control and manner of performance of the operations involved by these two factors will produce a better product, and much more simplified and lower cost process, especially in the application of a tin coating to steel or iron, than has heretofore been found possible. We have discovered that the initial stage of preparation of the ferrous metal surface by means of subjecting the latter to thermal and atmospheric conditions capable of producing certain desired chemical reactions, eliminates the previously required steps of scrubbing, pickling, rinsing and fluxing. We have also discovered that by the introduction of the ferrous metal so prepared to a bath of molten tin, the former being heated to a certain specified temperature range, that a greatly improved bond between the two metals results, with a marked decrease in, if not the complete elimination of, pores, pin holes, uneven distribution of the coating metal, and the presence of a substantially continuous, brittle, intermetallic compound or phase at the bonding line.

The process embodying our invention possesses the further advantage in that it is well adaptable to continuous operation.

To the accomplishment of the foregoing and related ends, said invention, then, consists of the steps hereinafter fully described and particularly pointed out in the claims.

The annexed drawing and the following description set forth in detail one approved method of carrying out the invention, such disclosed method, however, constituting but one of the various ways in which the principle of the invention may be used.

In said annexed drawing:

Fig. 1 is a diagrammatic view illustrating a form of apparatus adapted to perform the process embodying our invention; Figs. 2 and 3 are photo-micrographs of steel coated with tin by a process heretofore known and commercially practiced; and Figs. 4 and 5 are photo-micrographs of steel coated with tin according to our present process.

In the practice of our process, the ferrous metal, such as steel or iron, is introduced into a controlled atmosphere heating furnace. The ferrous metal may be in any desired or suitable form or shape such as that of a wire, strip, rod, bar, wire mesh, screen, or even irregularly shaped individual articles. In Fig. 1 of the drawing, this step is illustrated by way of the continuous steel strip 1 led into the heating furnace 2. The atmosphere in this furnace is determined by the introduction of gas, such as commercial annealing hydrogen, or partially burnt natural or artificial gases produced by commercial controlled atmosphere units, into the inlet 3. The temperature and concentration of the gases in the interior of the heating furnace 2 are so controlled as to produce the following decarburizing (1) and de-oxidizing (2) chemical reactions in the surface of the steel strip 1:

$$C+\begin{Bmatrix}O_2\\H_2O\\CO_2\end{Bmatrix}=\begin{Bmatrix}CO\\CO+H_2\\CO\end{Bmatrix} \quad (1)$$

$$Fe_2O_3+\begin{Bmatrix}CO\\H_2\end{Bmatrix}=\begin{Bmatrix}CO_2+Fe\\H_2O+Fe\end{Bmatrix} \quad (2)$$

The gaseous products of these reactions are removed from the heating furnace 2 through the outlet 4. It will be readily appreciated by those skilled in the art that the presence of any carbon dioxide and water in the gas introduced through the inlet 3 must be maintained at a low concentration in order to promote the procedure of these reactions in the desired direction. The temperature, of course, may vary over a wide range as far as these chemical reactions are concerned; however, the temperature of the steel strip 1 as it emerges from the end 5 of the heating furnace 2 into the tin bath 6, must be within a definite and specified range, as will be presently pointed out.

After the steel strip 1 has had its surface properly prepared by reduction of oxides at its surface and by the oxidation of carbon and carbonous substances, on and adjacent to its surface, the latter is then in properly cleaned condition for the application of the tin coating metal. In order to prevent the access of air to the surface of the steel strip 1, the lower end 5 of the heating furnace, which may be in the form of a quartz tube, is led under the surface of the tin bath 6.

The temperature of the tin bath is maintained at or slightly above the melting point of the tin. We have discovered that by maintaining the steel strip at or above the gamma iron transformation range, that it is possible to secure a direct bond between the tin and the steel without necessity of applying a flux to the latter. Reference to the iron carbon diagram will show that this gamma iron transformation temperature range begins at 1337° F. and proceeds to 1663° F. for complete transformation, depending upon the carbon content of the steel or iron. Therefore the temperature of the steel strip 1 emerging from the heating furnace 2 should be at or above this temperature transformation range at the time it is introduced into the tin bath 6.

After the steel strip 1, with its coating of tin is led out of the tin bath 6, it may be quenched by means of the water spray 7. The coated strip may, of course, be subjected to other equivalent quenching operations, such as being passed through a bath of palm oil and subsequently allowed to drain, as is commonly done in tin plating processes of the prior art.

We are at present unable to ascribe any scientific theory or principle for the reason why the tin coating or bonding is improved over that heretofore obtained. Suffice it to say that the heating of the steel or wire to a temperature at or above the incipient gamma iron formation temperature, viz., 1337° F. or the Ac_1 critical point is an important factor in the production of a better and improved bonding of the tin.

The heating of the steel or iron to a temperature above 1337° F. has a further important bearing in the performance of our process, in that the formation of a brittle intermetallic compound is broken up or rendered discontinuous. We, likewise, are unable at the present time to ascribe any scientific theory or principle why this breaking up or discontinuity of the iron-tin intermetallic compound occurs at this higher temperature range as compared to the lower temperature near the melting point of tin.

Reference to Figs. 2 and 3 as compared with Figs. 4 and 5 will, however, illustrate the distinctive results and differences in micro-structure which are obtained by virtue of our new tinning process. Figs. 2 and 3 are photo-micrographs taken at 1350 diameters of steel coated with tin by the previously employed commercial process wherein the steel is first scrubbed, pickled, rinsed and fluxed and then, without being heated to an elevated temperature, is coated with molten tin. Fig. 4 is a photo-micrograph taken at 1350 diameters of steel prepared according to our process, heated to 1600° F. and then immersed in the tin bath. Fig. 5 is a photo-micrograph taken at 1350 diameters of steel similarly prepared by heating to 2030° F. before immersing in the tin bath.

In Figs. 2 and 3, it will first be noted that the thickness of the tin coating is very uneven and irregular and is completely absent in certain spots resulting in the formation of pores, which are indicated by legends. The intermetallic iron-tin compound in Figs. 2 and 3 will be seen to be in a continuous form along the bonding line between the steel and tin. Furthermore, iron carbide or cementite, will be found in Figs. 2 and 3 at or near the bonding line. The pocket or deep penetration area of the tin into the steel as shown in Fig. 3 is probably the result of the pickling step of the process wherein the acid has penetrated and eaten out a portion of the steel. The action of nascent hydrogen also liberated during pickling causes an embrittlement of the steel.

Now referring to Figs. 4 and 5, more uniform thickness of the tin coating and the absence of any pores therein will become readily apparent. The brittle intermetallic iron-tin compound is broken up into discontinuous, dispersed or isolated areas, as indicated thereon. The iron carbide (Fe_3C) or cementite is not present at or near the bond due to the decarburizing treatment. The micro-structure of Fig. 5 is, of course, more deeply decarburized than that of Fig. 4 probably due to the higher furnace temperature.

The de-carburizing action is of further advantage in its effectiveness in the removal of burnt oil residue which might be present, and very frequently is, on the surface of the steel. Such residue is in the nature of a graphitic carbon which in previous tinning processes has been found to be very difficult and bothersome to remove. Heretofore an extensive washing process which has not always proven satisfactory, has been employed for removing this burnt oil residue. The decarburizing atmosphere in our present process completely and satisfactorily removes such residue, in addition to its decarburizing action upon and beyond the surface of the steel.

By quenching the steel or iron in the tin bath, the latter being at a lower temperature than that of the lower critical temperature range or Ac_1 point of the iron carbon constitution diagram, it is further possible by means of our invention to produce a heat treating effect in the steel or iron. Thus, if the tin bath is at a relatively low temperature, e. g., 500° F., it is possible to produce an appreciable hardening heat treating effect. The degree of hardness of the coated steel or iron can, of course, be controlled by the temperature of the tin bath, the amount of hardening, of course, being in inverse proportion to the temperature of the tin bath. This heat treating effect of the steel or iron will be found to be present in a temperature range for the tin bath of from the melting point of tin (449.6° F.) to approximately 1200° F.

It will thus be seen that the invention embodied in our process results in the production of a superior and much more satisfactory product than that heretofore obtained; that our process accomplishes in one step, namely, in the preparation of the surface of the steel or iron, a result which has heretofore required several steps, and with the elimination of the disadvantages incident to those several steps.

Other modes of applying the principle of our invention may be employed instead of the one explained, change being made as regards the process herein disclosed, provided the steps stated by any of the following claims or the equivalent of such stated step or steps be employed.

We therefore particularly point out and distinctly claim as our invention:

1. A method of coating ferrous metal with tin, comprising the steps of heating said ferrous metal to or above the gamma iron formation critical temperature and in an atmosphere sufficient to de-oxidize and decarburize the surface thereof, and then while the metal is at or above said temperature applying a coating of molten tin to said surface.

2. A method of coating ferrous metal with tin comprising the steps of heating said ferrous metal to a temperature at or above 1337° F. and in an atmosphere sufficient to deoxidize and decar-

burize the surface thereof, and then immersing said ferrous metal while at or above said temperature, in a molten tin bath, the temperature of said tin bath being in the range varying from the melting point of tin to 1200° F.

3. A method of coating ferrous metal with tin comprising the steps of heating said ferrous metal at or above a temperature range of 1337° F. to 1663° F. and in an atmosphere sufficient to deoxidize and decarburize the surface thereof, and then immersing said ferrous metal while at a temperature at or above said range in a molten tin bath, the temperature of said tin bath being in the range varying from the melting point of tin to 1200° F.

4. A method of coating ferrous metal with tin comprising the steps of heating said ferrous metal to or above the gamma iron formation critical temperature and in an atmosphere sufficient to deoxidize and decarburize the surface thereof, and then while the metal is at or above said temperature, applying a coating of molten tin to said surface, the temperature of said tin bath being in the range varying from the melting point of tin to 1200° F.

5. A method of coating ferrous metal with tin, comprising the steps of heating said ferrous metal to a temperature at or above 1337° F. and in an atmosphere sufficient to deoxidize and decarburize the surface thereof, then while the metal is at or above said temperature applying a coating of molten tin to the surface thereof.

6. A method of coating ferrous metal with tin, comprising the steps of heating said ferrous metal to a temperature at or above a temperature range of 1337° F. to 1663° F. and in an atmosphere sufficient to deoxidize and decarburize the surface thereof, then while the metal is at or above said temperature range applying a coating of molten tin to the surface thereof.

7. A method of coating ferrous metal with tin, comprising the steps of heating said ferrous metal to or above the gamma iron formation critical temperature and in an atmosphere sufficient to deoxidize and decarburize the surface thereof, and then while the metal is at or above said temperature immersing said ferrous metal in a molten tin bath.

8. A method of coating ferrous metal with tin, comprising the steps of heating said ferrous metal to a temperature at or above 1337° F. and in an atmosphere sufficient to deoxidize and decarburize the surface thereof, and then while the metal is at or above said temperature immersing said ferrous metal in a molten tin bath.

9. A method of coating ferrous metal with tin, comprising the steps of heating said ferrous metal to a temperature at or above a temperature range of 1337° F. to 1663° F. and in an atmosphere sufficient to deoxidize and decarburize the surface thereof, and then while the metal is at above said temperature range immersing said ferrous metal in a molten tin bath.

CARL E. SWARTZ.
DONALD L. V. SCHWARTZ.