(No Model.)

H. C. HILL.

SULKY.

No. 455,987. Patented July 14, 1891.

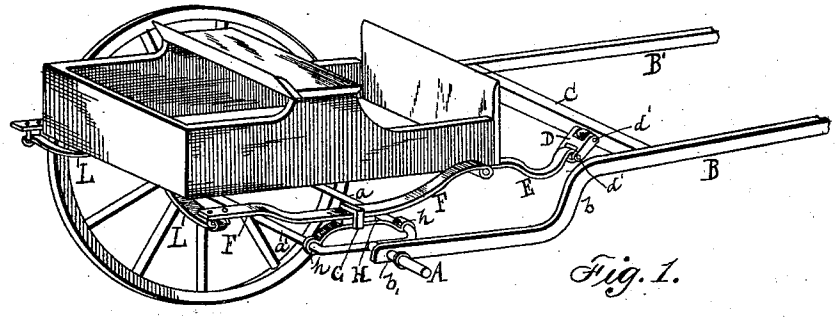

Fig. 1.

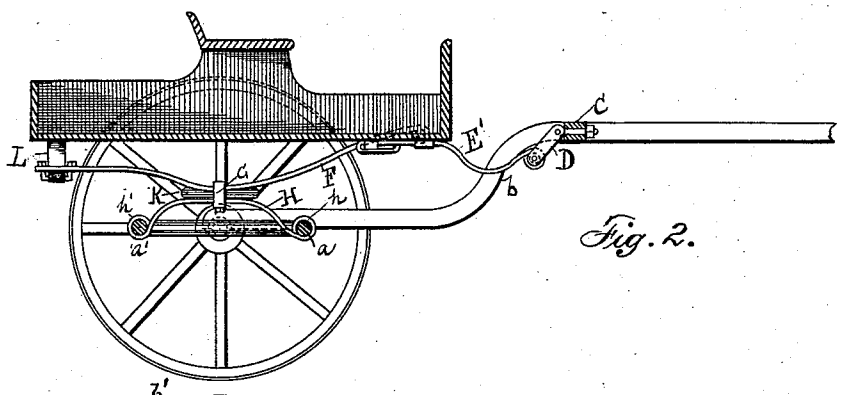

Fig. 2.

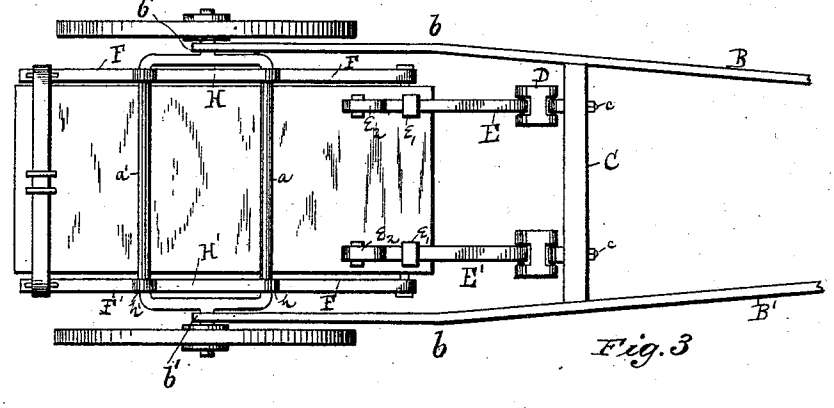

Fig. 3

Fig. 4.

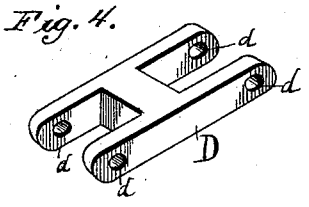

Witnesses
M. B. Harris
J. C. Wilson

Inventor
Homer C. Hill

By his Attorneys
Whitman & Wilkinson

THE NORRIS PETERS CO., PHOTO-LITHO., WASHINGTON, D. C.

UNITED STATES PATENT OFFICE.

HOMER C. HILL, OF CLINTON, ILLINOIS.

SULKY.

SPECIFICATION forming part of Letters Patent No. 455,987, dated July 14, 1891.

Application filed November 15, 1890. Serial No. 371,529. (No model.)

To all whom it may concern:

Be it known that I, HOMER C. HILL, a citizen of the United States, residing at Clinton, in the county of De Witt and State of Illinois, have invented certain new and useful Improvements in Sulkies; and I do hereby declare the following to be a full, clear, and exact description of the invention, such as will enable others skilled in the art to which it appertains to make and use the same.

My invention relates to certain new and useful improvements in sulkies, which will be hereinafter described and claimed.

The improvements referred to are more especially applicable to the form of sulky shown in my patent, No. 429,348, dated June 3, 1890.

Reference is had to the accompanying drawings, wherein the same parts are indicated by the same letters.

Figure 1 represents a perspective view of my improved sulky, one wheel being removed to better show the parts lying behind the same. Fig. 2 represents a vertical longitudinal section of my improved sulky. Fig. 3 represents a plan view of the same turned upside down. Fig. 4 represents an enlarged perspective view of my improved knuckle.

A represents the axle forked at a and a'.

B and B′ represent the shafts bent at b and loosely inclosing the axle at b', as described in my patent, No. 429,348, or in any other convenient way.

C is a cross-piece between the shafts. The front of the sulky-body is connected to this cross-piece by means of springs E E′, secured at e' e^2 beneath the front of the body and the H-shaped knuckle D and the bolts d' d' and c. This knuckle oscillates up and down with the motion of the horse, and not only lessens the disagreeable jarring of the sulky, but makes the work much easier for the horse, for any lost motion incident to the jarring of the sulky must be at the expense of the horse. The springs E and E′ also materially lessen the said jarring.

In addition to the ordinary side springs F and the cross-springs L, I also add two springs H and H′, spanning the distance between the forks of the axle. Between this spring and the spring F, I place a block K. This block may be made of wood, leather, rubber, or of any suitable material. The strap G holds the two springs firmly together.

By having the shafts loose on the axles, with the springs E and knuckles D forming the only other connections between the shafts and the body of the sulky, it will be seen that very little of the jarring motion of the horse will be imparted to the body of the sulky, and by having the arrangement of springs shown beneath the body of the sulky that provision is made against the roughness of the road, the result of the combination being a vehicle that is easy-going both for the driver and the horse.

Having thus described my invention, what I claim, and desire to secure by Letters Patent of the United States, is—

1. In a sulky, the combination of a bifurcated axle and two springs H and H′, spanning the said bifurcation and supporting the side springs F of the sulky, substantially as described.

2. In a sulky, the combination of a bifurcated axle, two springs H and H′, spanning the said bifurcation, and supporting-blocks on which are strapped the side springs F of the sulky, substantially as described.

3. In a sulky, the combination of the cross-piece C between the shafts, the knuckles D and D′, springs E and E′, bifurcated axle A, and springs H and H′, spanning the forks of the same, substantially as described.

4. In a sulky, the combination of the cross-piece C between the shafts, the knuckles D and D′, springs E and E′, bifurcated axle A, springs H and H′, blocks K, and springs F and F′, substantially as described.

In testimony whereof I affix my signature in presence of two witnesses.

HOMER C. HILL.

Witnesses:
W. Z. DEWEY,
W. M. CARTER.