Dec. 4, 1962

O. ERTESZEK

3,066,308

SLIP-TYPE UNDER GARMENT

Filed Dec. 22, 1961

FIG. 1.

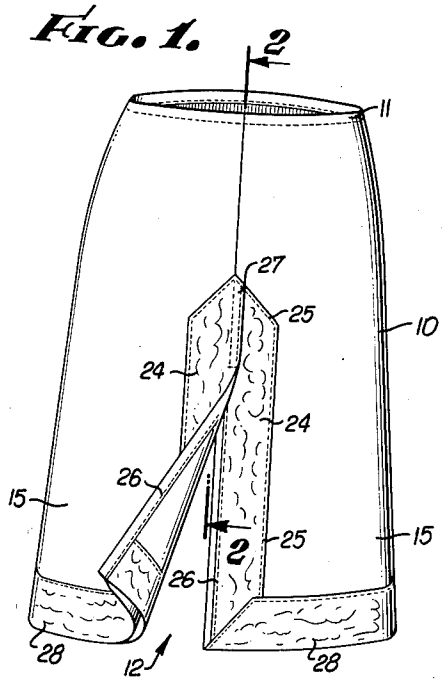

FIG. 2.

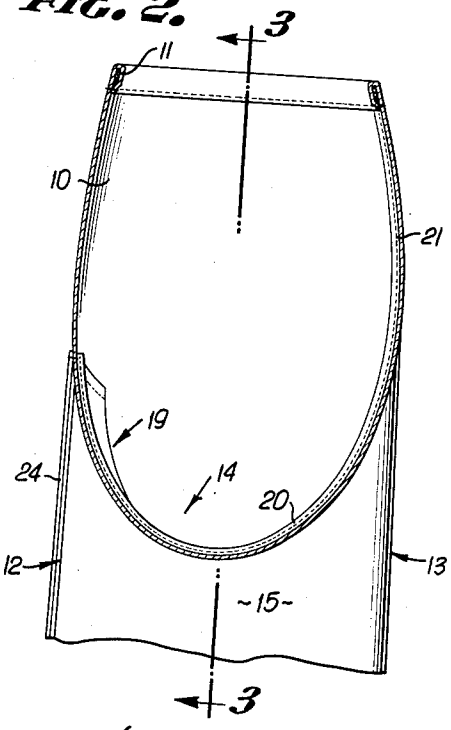

FIG. 3.

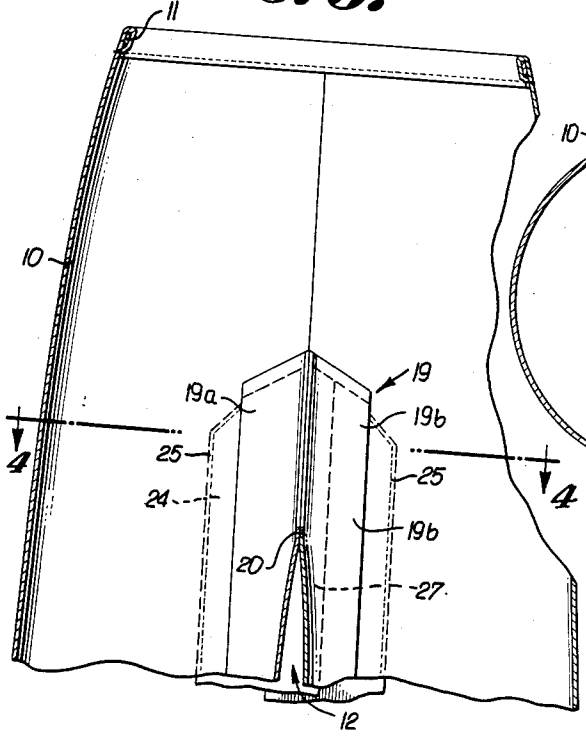

FIG. 4.

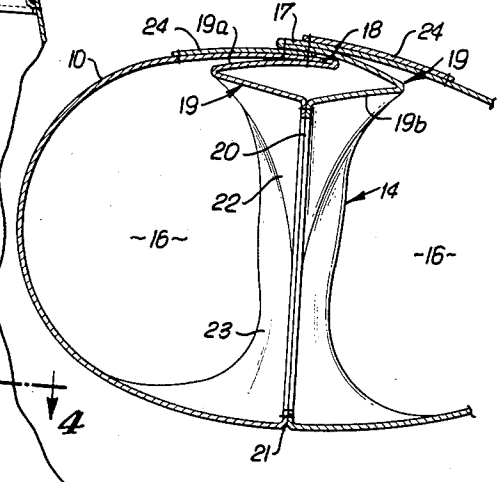

INVENTOR.
OLGA ERTESZEK
BY White and Haefliger
ATTORNEYS.

United States Patent Office

3,066,308

Patented Dec. 4, 1962

3,066,308
SLIP-TYPE UNDER GARMENT

Olga Erteszek, 7915 Haskell Ave., Van Nuys, Calif.

Filed Dec. 22, 1961, Ser. No. 161,684
4 Claims. (Cl. 2—212)

This invention has to do generally with improvements in women's under garments and is directed particularly to a novel combination slip and panty single and unitized garment having advantages common to both the usual under slip and light weight panty.

The invention generally contemplates a garment of this character, the body of which is made of a relatively light weight, usual slip-type fabric, having normal slip length from the upper waist portion to the bottom of the garment. In order to afford the garment the panty feature as well as expansiveness beyond the ordinary slip, the body is split centrally at the front and rear and is sewn to form a closed crotch between the upper extremities of the splits, and legs extending from the crotch to the bottom of the garment. Thus the garment offers full freedom and comfort of a slip, while allowing for concealment not afforded by the usual slip.

If made entirely of the usual light weight slip materials, a garment construction as described, is found to display an undesirable lack of conformance to conditions which it is intended to assume, because of instabilities and absence of proper control of the body fabric. These tendencies occur primarily at the front split where, in the absence of provisions contemplated by the invention, the body fabric may assume random departures from proper conformance and hang at the extended edge portions of the split.

Accordingly, my primary object is to overcome this undesirable condition in a manner that will cause the split configuration to assume and retain an essentially straight condition when the garment is worn. This object is accomplished by applying to the body fabric along opposed edge portions of the front split, a relatively heavier fabric, the weight of which is sufficient to cause the desired conformance. To this same end, a similarly characterized band is carried about the bottom edge portion of the garment. The invention particularly contemplates achieving this functional result while affording desirable decorativeness to the garment, by utilizing a relatively heavy lace as the weighting band material.

The invention will be further understood from the following detailed description of an illustrative embodiment shown by the accompanying drawing in which:

FIG. 1 is a front elevation of the garment, with one side turned outwardly to expose the split and related construction;

FIG. 2 is a fragmentary enlarged cross section taken on line 2—2 of FIG. 1;

FIG. 3 is an inside view looking toward the front of the crotch, taken on line 3—3 of FIG. 2; and

FIG. 4 is a fragmentary section as viewed downwardly from plane of line 4—4 in FIG. 3.

The body **10** of the garment, made of any of the usual light weight slip fabrics, is shown to have normal slip length from the waist band **11** to the bottom of the body. The latter is split vertically at **12**, at the front of the garment, and also at **13** at the gear, the splits extending upwardly to the crotch formation generally indicated at **14** in FIG. 2. The body fabric is closed or sewn together along the edges of the splits to form legs **15** which, the openings **16** (see FIG. 4) are at opposite sides of the crotch **14**.

As shown in FIG. 4, the crotch **14** is formed by doubling inwardly and sewing together the body fabric at **17** and **18**, to an internal configuration consisting of folds **19** sewn together at **20** along a seam line extending to the back of the garment at **21**. The outer portions **19***a* of the folds **19** hang generally straight down, whereas the inner folds **19***b* drape at **22** toward the seam line **20**, and the material further drapes at **23** at the insides of the leg opening **16**.

It is found that if the garment were made entirely of the light body fabric, it would tend to behave uncontrollably at the front split **12** where straight hanging overlapped conformance of the edge portions of the split is desirable. Accordingly, to assure maintenance of the desired condition, the garment is faced along the full length of the split with bands **24** of relatively heavy fabric sewn to the body along the seam lines **25**, and along seams **26** near the body fabric edges defining the split. Preferably, as indicated, the weighting bands **24** are given a degree of overlap as at **27**. In order to afford added weight of tensioning of the body fabric not only at the split, but about the entire body of the garment, the latter is faced about the bottom and at the outsides of the legs **15**, with a band **28** of similar relatively heavy material. As previously indicated, in order to achieve the functional objectives of conforming the garment to proper shape and hang, and also to add attractiveness, the bands **24** and **28** preferably are made of lace sufficiently heavy for the weighting purposes.

I claim:

1. A slip type undergarment formed of thin lightweight fabric of a length to extend downwardly from the waistline of the wearer to a point below the crotch of the wearer, the body of the garment having an upper continuous torso encircling portion and a lower portion including separate leg portions, the lower front central portions of the garment being folded and having the adjacent edges of the folds overlapped and secured together at the top of the folds so that said edges of the folds hang close together on the wearer to present a skirted effect at the front of the garment, and bands of weight adding lace applied to the body fabric along the folds at said edges from the top of the crotch covering portion to substantially the bottom of the garment to cause said edge portions to hang together by the weighting effect of he lace in an essentially straight line when on the wearer.

2. A garment according to claim 7 wherein said lace bands are also applied to and about the exposed bottom edge portions of the garment, the top extremities of said first-mentioned bands converging upwardly to an apex at the location of the crotch.

3. A garment according to claim 1 in which the adjacent edges of said bands hang in overlapping relationship from the crotch to the bottom of the garment.

4. A garment according to claim 1 in which said bands of lace overlap at the outside of said folds and hang parallel therewith.

References Cited in the file of this patent

UNITED STATES PATENTS

D. 149,094	Silverman	Mar. 23, 1948
1,293,152	Malsin	Feb. 4, 1919
2,665,428	Bowley	Jan. 12, 1954
2,758,312	Goldstein	Aug. 14, 1956

FOREIGN PATENTS

472,129	Great Britain	Sept. 17, 1937

UNITED STATES PATENT OFFICE

CERTIFICATE OF CORRECTION

Patent No. 3,066,308 December 4, 1962

Olga Erteszek

It is hereby certified that error appears in the above numbered patent requiring correction and that the said Letters Patent should read as corrected below.

Column 2, line 47, for the claim reference numeral "7" read -- 1 --.

Signed and sealed this 14th day of May 1963.

(SEAL)
Attest:

ERNEST W. SWIDER
Attesting Officer

DAVID L. LADD
Commissioner of Patents