May 27, 1941. C. A. GUSTAFSON 2,243,251

ROAD MACHINE

Filed Jan. 17, 1938 2 Sheets-Sheet 1

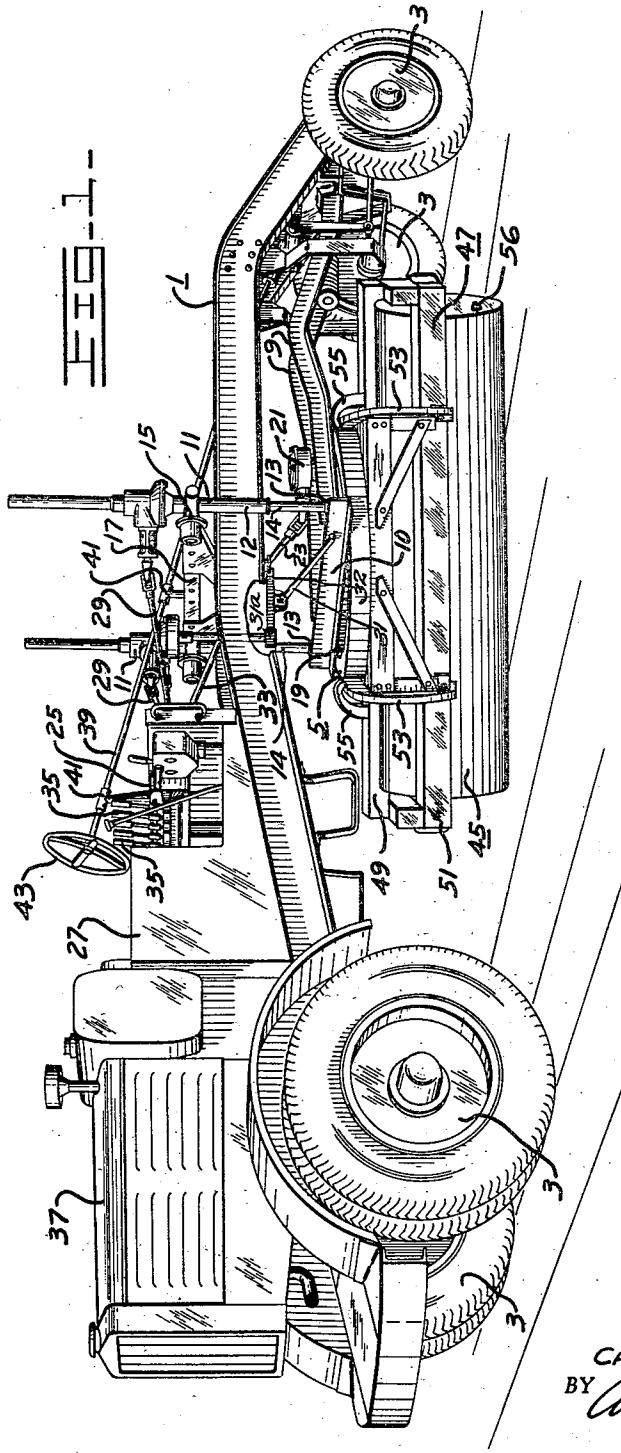

FIG. 1.

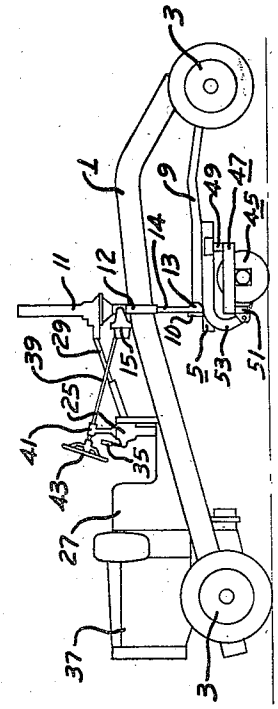

FIG. 2.

INVENTOR.
CARL A. GUSTAFSON
BY Charles M Fryer
ATTORNEY.

May 27, 1941. C. A. GUSTAFSON 2,243,251

ROAD MACHINE

Filed Jan. 17, 1938 2 Sheets-Sheet 2

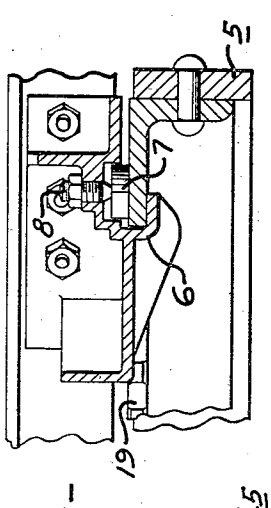

Fig. 4.

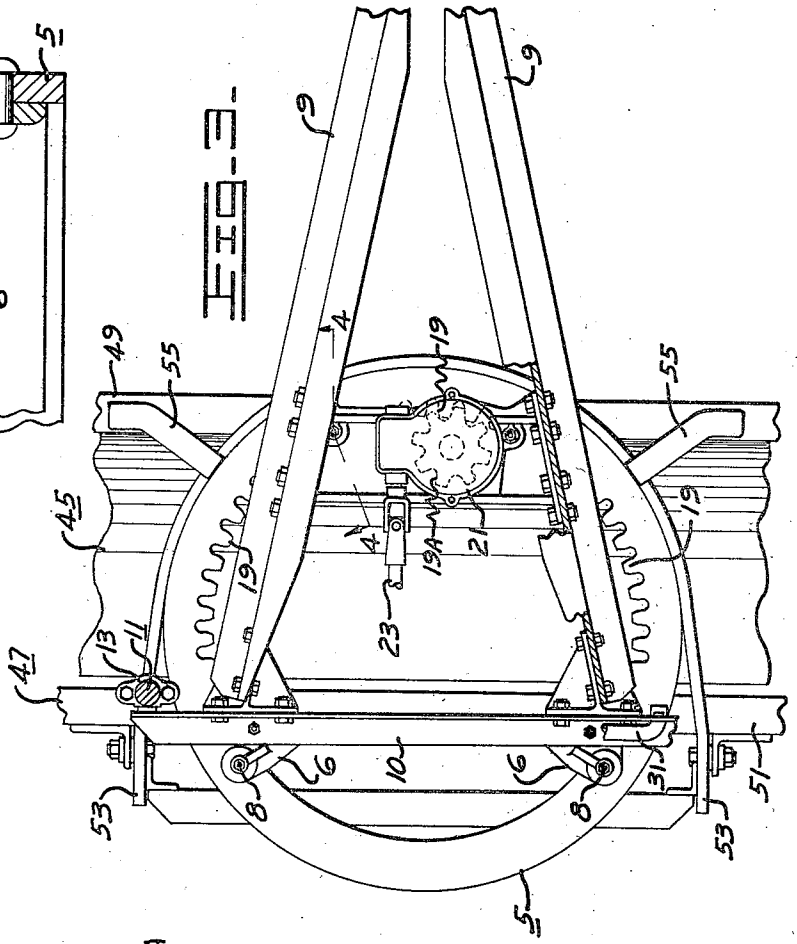

Fig. 3.

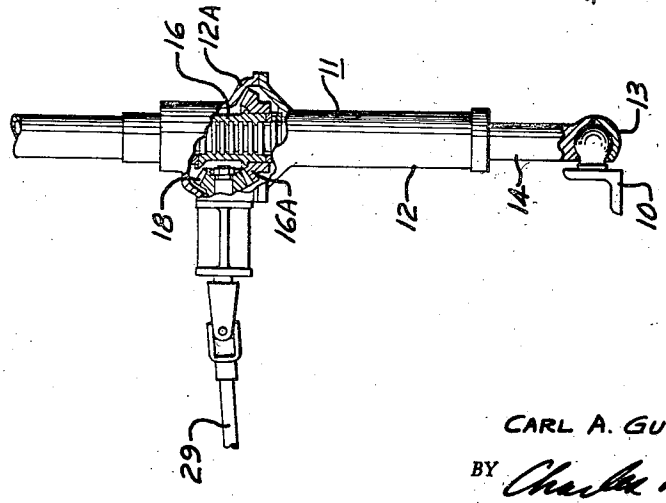

Fig. 5.

INVENTOR.
CARL A. GUSTAFSON
BY Charles M Fuyler
ATTORNEY.

Patented May 27, 1941 2,243,251

UNITED STATES PATENT OFFICE

2,243,251

ROAD MACHINE

Carl A. Gustafson, Peoria, Ill., assignor to Caterpillar Tractor Co., San Leandro, Calif., a corporation of California

Application January 17, 1938, Serial No. 185,346

4 Claims. (Cl. 94—50)

My invention relates to road machinery, more particularly to the self-propelled type of road grader machine having a tool supporting rig located intermediate the front and rear wheels or earth-engaging means.

Frequently, in connection with the repairing or resurfacing of roads or in the construction of new roads, a rolling operation becomes desirable to compact the layers of material after they have been spread on the surface of the road bed. This becomes necessary, for example, on newly spread gravel, on oil mix and other road mix for roads when nearing completion, or between forms on fine grading. It has heretofore been necessary on occasions of this kind to provide a separate road roller for this purpose. In addition to the initial investment which the purchase of such machinery entails, it will be apparent that the cost of a project is increased by the additional expense involved in the use of such machines.

It is accordingly an object of my invention to widen the scope of utility of a road grader machine, more particularly one of the self-propelled type.

It is another object of my invention to provide means for converting a self-propelled grader to a self-propelled roller.

A further object of my invention is to provide a self-propelled road grader machine capable of conversion from a road grader to a road roller, and permitting steering through the roller element when operating as a road roller.

A further object of my invention is to provide an improved means for enabling turning of a vehicle of long wheel base on a short radius.

Additional objects of my invention will be disclosed in the following description of the same taken in conjunction with the accompanying sheets of drawings wherein:

Fig. 1 illustrates a road machine, in perspective, of the road grader type after the same has been converted to operate as a road roller, a portion of the structure being broken away to illustrate more clearly the construction.

Fig. 2 depicts, in outline, a machine of the type shown in Fig. 1 after adjustment for operation as a road roller, steering being permitted through the roller element.

Fig. 3 is a fragmentary plan view of the circle and drawbar assembly.

Fig. 4 is a vertical section taken in a plane indicated by line 4—4 in Fig. 3.

Fig. 5 is an elevational view of a lift link, with parts being broken away and shown in section to illustrate the construction.

Road grader machines in general usually comprise a heavy rigid arched frame supported at its front and rear upon axles mounted on suitable wheels or equivalent earth-engaging means. Earth-working tools such as a blade are mounted on a tool holder which is usually supported on the frame intermediate the front and rear wheels. The tool holder is usually capable of adjustment vertically, laterally, and angularly about a vertical axis for the purpose of positioning the tool carried thereby to accommodate it to the surface upon which the tool is to operate. In a grader of the self-propelled type, a power plant is mounted on the framework in driving connection with the rear wheels and power from the power plant is taken off to operate the adjusting mechanism for the tool holder. The controls for the power plant and the driving connection as well as the controls for the adjusting mechanism are all located adjacent an operator's station whereby the entire control of the machine is placed within the command of one operator.

My invention as far as constructional changes are concerned, involves but the simplest of changes in the above type of machine, and in a few words, this change comprises the application of a roller element to the tool holder in lieu of the cutter type of earth-engaging tool, which the tool holder customarily carries on a grader machine. This change is of special significance when applied to a road grader of the self-propelled type, and more particularly one in which the tool holder is capable of angular movement about a vertical axis; and involves more than a mere interchange of tool elements because in making the change specified, the entire operation of the machine is changed thereby.

Certain of the elements of the machine no longer function in the manner in which they are intended to operate when the machine is provided with a blade for operation as a grader, but are either disabled or take on different functions. When the roller element and the tool holder are adjusted for maximum roller pressure, the machine no longer rides on the front wheels which are lifted above ground. The weight of the machine in this condition is carried by the roller and the rear wheels, and consequently the entire weight of the machine is distributed between these elements. The fact that the roller is located closer to the rear wheels than are the front wheels of the machine will naturally cause a greater portion of the weight of the vehicle to be carried by the roller than was initially carried by the front wheels, and the pressure due to

this is usefully employed because the efficiency of the roller depends upon the pressure which is brought to bear upon it.

The tool holder which formerly was adjustable angularly with respect to the vertical axis to determine the proper distribution of dirt or road material by the blade during forward movement of the road machine or the grader, now is employed for an entirely different purpose when it is employed as a mounting for a roller element. There is no longer any necessity or desire to provide angular adjustment of the tool holder during forward movement of the machine as a road roller, it being preferable during this type of operation to maintain the roller at right angles to the draft of the machine. The angular adjustability of the tool holder, however, has been found to offer a convenient and easily controlled means for steering the machine through the roller element, and thus avoiding the necessity of first restoring operability to the customary steering mechanism by lifting the roller element sufficiently to bring the front wheels again into ground engagement.

It will be noted in this connection, that when running with the front wheels in raised position out of contact with the ground, the effective wheel base of the machine has been reduced to the distance between the roller element and the rear wheels, which consequently reduces the wheel base to approximately half its value. The significance of this resides in the fact that the machine may be turned in a circle of approximately one-half the radius formerly required when running on all its wheels. This is an important function because road grading machines are constructed with exceptionally long wheel bases to provide the necessary rigidity and stability to the earth-working tool mounted thereon, and also to provide sufficient room for the angular adjustment of such a tool which may at times be of appreciable length. Machines of this character are frequently employed in the repair or resurfacing of country roads and other roads which are narrow in width, and great difficulty is experienced at times in turning the machine at the end of a run for return travel. The location of the roller closer to the rear wheels than the front wheels, and the fact that the roller is angularly adjustable about a vertical axis will greatly facilitate and simplify the problem of turning a machine of the character described.

For a more complete description of the invention, reference will be made to the drawings which disclose a road grader of the type illustrated in my Patent No. 2,034,141, dated March 17, 1936, comprising a framework 1 arched in the center and supported at its front and rear upon axles mounted on suitable wheels 3 or equivalent earth-engaging means. At an intermediate position between the front and rear wheels 3 and below the frame 1 is supported a tool holder of conventional construction, including what is known to the art as a circle 5. This circle is carried by an auxiliary sub-frame formed by a pair of converging draft or draw bars 9 and a cross bar 10, in any suitable manner such as by lip elements 6 depending from the frame and engaging the under-surface of the circle, whereby angular rotational movement of the circle with respect to the frame may take place about an upright axis; rub irons 7 and set screws 8 being provided to take up wear in parts and eliminate play, as is disclosed in my aforementioned prior patent. The converging draft bars 9 are pivotally secured by a universal connection to the front end of the frame thus allowing for elevational and swinging adjustment of the circle. Elevational adjustment is obtained by telescopic lift links 11, one at either side of the frame 1, each of the telescopic lift links comprising a guide element or sleeve 12 into which may be adjustably positioned a link element 14. The telescopic lift links are each joined to one end of the cross bar 10 by a ball and socket connection 13 and connected by a universal coupling 15 to a cross member 17 mounted upon the frame 1. These telescopic link connections permit vertical adjustment of the circle 5, and at the same time enable movement of the circle 5 laterally or sidewise of its normal position in cooperation with lateral shift mechanism.

As is illustrated in my aforementioned prior patent, the lift means or telescopic lift links at each side of the machine are of the screw lift type including a housing portion 12A to which sleeve element 12 is secured, and which is universally mounted on the main frame of the machine. A nut or collar 16 held against axial displacement is journalled within housing 12A, and has secured thereto a bevel gear 16A meshing with another drivable bevel gear 18. The link element 14 extends through each housing 12A, and is threaded in nut 16; and by rotation of nut 16 in either one of opposite directions, element 14 may be raised or lowered, depending upon the direction of rotation.

The circle 5 is provided internally over a substantial angle with gear teeth 19. Angular adjustment of the circle is obtained through a pinion 19A supported in a housing 21 which pinion engages the teeth 19 on the circle 5 and is driven through an extensible link connection 23 from a power control panel 25 mounted within convenient reach of an operator's station 27. The vertically adjustable telescopic lift link connections 11 are each also driven by means of an extensible link connection 29 from the same power panel located adjacent the operator's station; such extensible link connection 29 being connected to bevel gear 18.

As is disclosed in my aforementioned prior patent, the circle is also capable of being displaced sidewise or laterally by means of a rigid connecting link 31 engaging the circle supporting cross bar 10 at one end and pivotally connected to a rack member 32 slidably supported on the frame 1, and meshing with pinion 32A drivable from the power control panel 25 referred to, by means including shafting 33. The power control panel has mounted thereon suitable hand operated control levers 35 for effecting a drive connection between the various control members and a power unit 37 mounted above the rear axle of the machine, which power unit also serves as the means for propelling the machine. The described adjustments may be made in any conventional manner by manually operable means, but power control mechanism of the type disclosed in my aforementioned patent is preferred.

Steering is normally accomplished by a connection to suitable turning means at the front axle through a steering rod 39 supported in mounting brackets 41 fixed to the cross bar 17 and the power panel 25 and terminating in a steering wheel 43 at the operator's station 27.

In lieu of the blade or similar earth-engaging tool which is customarily applied or supported on the circle 5 when the machine is operated as a grader, I have attached a roller element 45. The roller is journalled in a frame 47 surrounding

the roller, the longer side 49 of the framework extending across the front of the roller 45 being at a higher elevation than the corresponding rear element 51 of the frame, and has been purposely made so to facilitate its attachment to the circle element 5. The circle element is usually provided with a pair of rearwardly and downwardly extending arms or brackets 53 for attachment to a blade or similar tool, and to these arms is attached the lower or rear member 51 of the roller frame 47. The front member 49 of the frame is clamped to the circle in any suitable manner, as by clamping elements 55 shown. In this manner, the roller may be very quickly and easily assembled to the customary circle element 5 without necessitating any alteration of the construction of this element.

The specific details of the machine are not pertinent to the present invention inasmuch as the invention relates primarily to a new combination resulting from the replacement of a blade normally employed on the adjustable circle by a roller, and has particular applicability to a self-propelled road machine to enable steering by adjustment of the circle.

The roller element 45 may be of solid construction throughout or may constitute a hollow cylinder and be provided with a plug 56 in one of its end walls to permit of the filling of this roller with water or other similar material in the event that it is desired to increase the weight thereof.

In the operation of the machine of Fig. 1 as a road roller, the roller 45 is lowered into contact with the ground by means of the telescopic lift links 11 which support the circle 5 in elevation, and the degree of pressure upon the roller may be increased until the front wheels of the machine have been lifted out of contact with the ground. This permits of a wide range of roller pressures, so that the first rolling can be made with the front wheels in contact with ground with just enough pressure on the roller to roll the material and not pile it up in front of the roller. Then after the material has become somewhat compacted through one or more such light rolling operations, the maximum pressure can be applied which is realized when the front wheels have been lifted above ground and the weight of the machine is carried by the roller and rear wheels. In this condition, the normal steering mechanism becomes disabled, in that while the position of the front wheels might be shifted, it will have no effect in the steering of the vehicle. The machine will ride on the roller 45 and the rear wheels, and in view of the location of the roller at a position intermediate the front and rear wheels, the roller will be made to carry a considerably greater portion of the weight of the machine than the front wheels do when the front wheels share the load with the rear wheels. This provides for sufficient pressure to bear upon the roller element to enable it to function satisfactorily, and by filling the roller element with water or similar liquid, the pressure upon the road surface may be thereby increased somewhat.

The roller element is capable of lateral displacement in the same manner as the blade element when the machine was operating as a grader, but as far as the angular adjustment control is concerned, it will not be desirable to operate this control during forward travel of the machine, when operating as a road roller; but this particular control finds application when the machine is operating as a road roller, at such times as when it becomes necessary to steer the machine or turn it around for return travel. Thus the roller and the angular adjustment performs all the functions of the front wheels and the customary steering mechanism, at the same time that it enables the machine to operate as a road roller. It possesses a further advantage over the customary drive, for it permits turning of the machine within a considerably smaller area than when relying on the front wheels for maneuvering, and this added advantage, as previously explained, is attributed to the shorter wheel base made effective upon using the roller as a means for steering the vehicle.

In Fig. 2, I have shown in outline a road machine of the type illustrated more in detail in Fig. 1, when adjusted for operation as a road roller, with steering accomplished through the rolling element. The various features and advantages attributed to the combination of a roller element on a machine, particularly of the self-propelled type as described in connection with Fig. 1, will become apparent from this outline sketch of Fig. 2.

While I have disclosed my invention in sufficient detail to bring out its characteristics and advantages, it will become apparent that my invention is subject to changes and variations without departing from the scope of the invention. I, accordingly, do not desire to be limited in my protection to the specific showing and description set forth by me except as may be necessitated by the prior art and the appended claims.

I, therefore, claim as my invention:

1. A road machine comprising a main frame having rear wheels and front steerable wheels and an operator's station, an auxiliary drawbar frame movably connected to said main frame, spaced lift means on said main frame for adjusting said auxiliary frame vertically, a circle frame supported on said auxiliary frame for angular adjustment about an upright axis at a location between said front and said rear wheels, means controllable by an operator at said operator's station for effecting such adjustments, and a roller element supported on said circle frame enabling steering of the machine within a shorter radius than possible through the front steerable wheels when said lift means are so adjusted as to lift said front steerable wheels off of the ground.

2. A road machine comprising a main frame supported on front and on rear ground-engaging wheels and having an operator's station thereon, certain of said ground-engaging wheels enabling steering of said machine, a roller element supported from said machine, means for urging said roller element in ground engagement sufficient to lift said ground-engaging steering wheels from contact with the ground to disable their steering ability and transfer a substantial portion of the weight of the machine to the roller element, and means controllable by an operator at said operator's station for angularly adjusting said roller element about a vertical axis to control steering of said machine with said roller element.

3. A self-propelled road machine comprising a power plant, a main frame having an operator's station thereon, front steerable wheels, an auxiliary drawbar frame movably connected to said main frame, spaced lift links on said main frame for adjusting said auxiliary frame vertically, a circle frame supported by said auxiliary frame for angular adjustment about an upright axis, means controllable by an operator at said

operator's station for effecting such adjustments, and a road roller attachment serving as the sole rolling means on said machine and detachably carried by said circle frame; the lift links enabling ground pressure to be applied to the roller and lifting of said front wheels off of the ground, and said angular adjustment of said circle frame enabling steering of the machine when said front wheels are thus lifted.

4. A self-propelled road machine comprising a power plant, a main frame having an operator's station thereon, front steerable wheels, an auxiliary drawbar frame movably connected to said main frame, spaced lift links on said main frame for adjusting said auxiliary frame vertically, a circle frame supported by said auxiliary frame for angular adjustment about an upright axis, and means controllable by an operator at said operator's station for effecting such adjustments; and road roller attachment mechanism detachably carried by said circle frame including a roller frame having means for detachable connection to said circle frame, and a road roller journalled in said roller frame and serving as the sole rolling means on said machine.

CARL A. GUSTAFSON.