March 14, 1961 W. M. BRUBAKER ET AL 2,975,278

MASS SPECTROMETER

Filed Aug. 12, 1957 3 Sheets-Sheet 1

FIG. 1

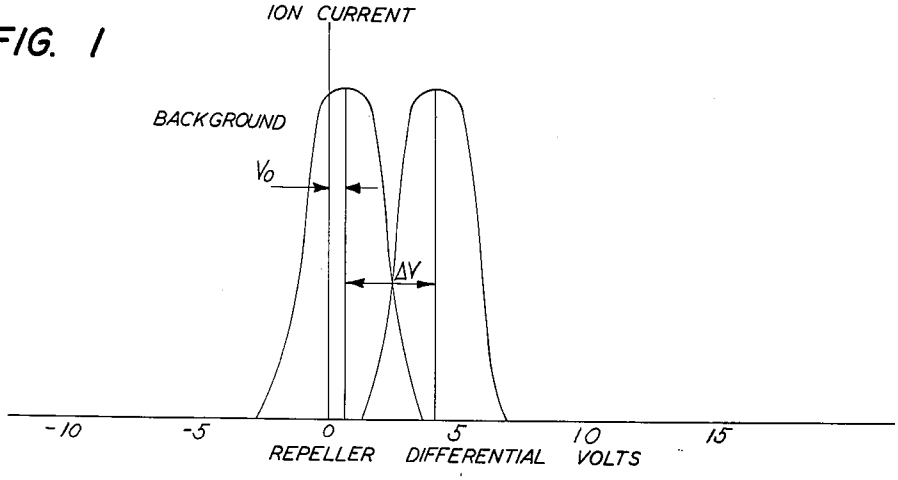

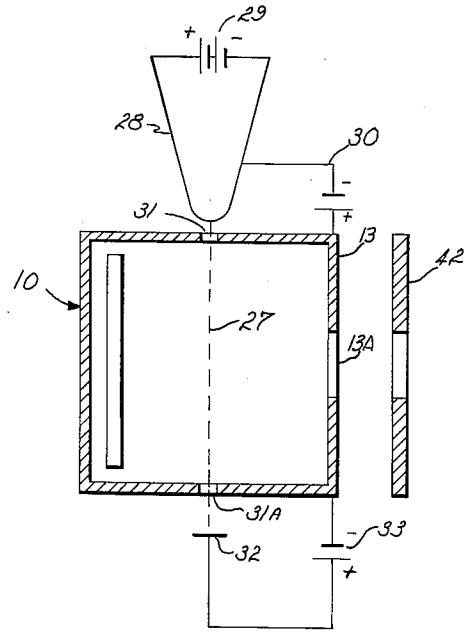

FIG. 3

INVENTOR.
WILSON M. BRUBAKER &
CHARLES F. ROBINSON

BY Christie, Parker & Hale
ATTORNEYS

March 14, 1961 W. M. BRUBAKER ET AL 2,975,278

MASS SPECTROMETER

Filed Aug. 12, 1957 3 Sheets-Sheet 2

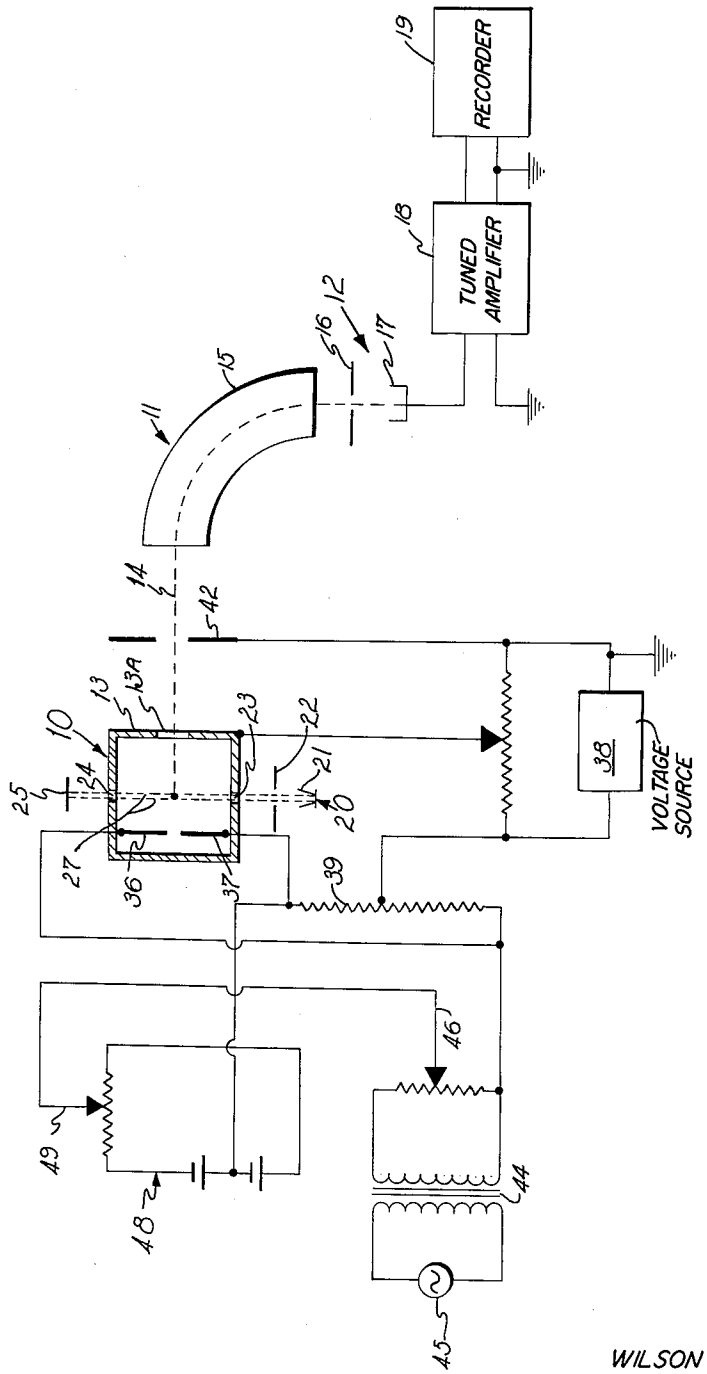

FIG. 2

INVENTOR.
WILSON M. BRUBAKER &
CHARLES F. ROBINSON

BY Christie, Parker & Hale
ATTORNEYS

March 14, 1961 W. M. BRUBAKER ET AL 2,975,278

MASS SPECTROMETER

Filed Aug. 12, 1957 3 Sheets-Sheet 3

FIG. 4

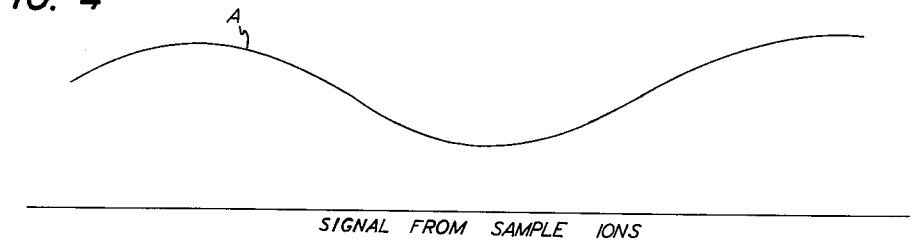

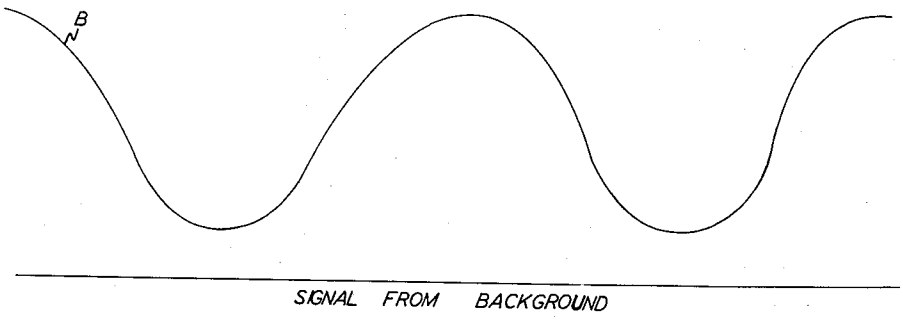

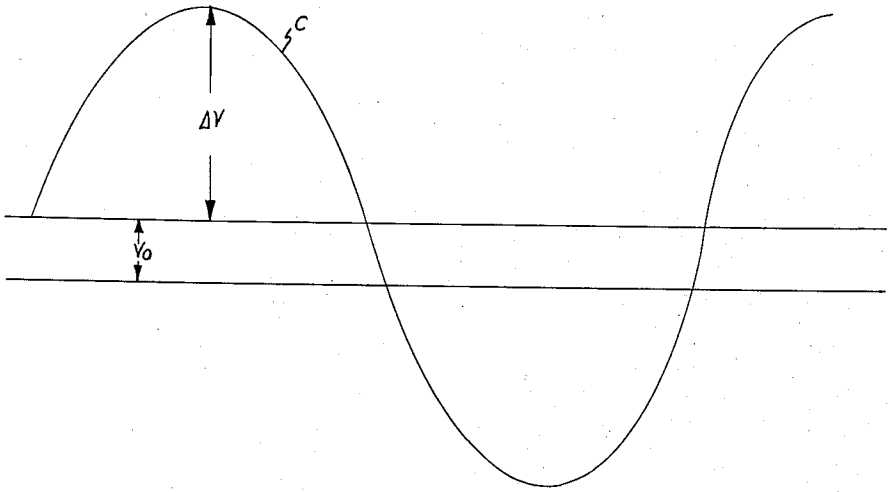

INVENTOR.
WILSON M. BRUBAKER &
CHARLES F. ROBINSON

BY

Christie, Parker & Hale
ATTORNEYS

United States Patent Office 2,975,278
Patented Mar. 14, 1961

2,975,278

MASS SPECTROMETER

Wilson M. Brubaker, Arcadia, and Charles F. Robinson, Pasadena, Calif., assignors, by mesne assignments, to Consolidated Electrodynamics Corporation, Pasadena, Calif., a corporation of California

Filed Aug. 12, 1957, Ser. No. 677,488

3 Claims. (Cl. 250—41.9)

This invention relates to mass spectrometry and particularly to means for suppressing spurious signals resultant from unwanted background ionization.

A mass spectrometer is an instrument for ionizing molecules of a sample to be analyzed and selectively sorting and measuring these ions as a function of their mass-to-charge ratio (specific mass). Mass spectrometers take many forms but universally include means for ionizing a sample, means for subjecting ions to forces tending to separate them as a function of their specific mass and means for selectively sensing ions of different specific mass. One form of mass spectrometer will be described in some detail herein.

In any mass spectrometer, ions other than those of interest are inevitably formed from metal surfaces, residual molecules, etc. and are referred to as background ions. Background ions exhibit completely unordered energy and by reason of this fact we have discovered means for selectively repressing the ion current produced by these background ions.

We have developed a method of mass spectrometry which minimizes the consequence of background ions. This method involves introduction into the ionizing region of a mass spectrometer of a molecular sample beam of ordered energy, ionizing molecules of the molecular beam, subjecting the ions to a propelling potential having a transverse component of potential to counteract the effect of the ordered energy of the ions produced from the sample and to focus the sample ions at an outlet from the region while simultaneously defocusing background ions of unordered energy.

We have further devised a means for selectively sampling molecules which enter an ion source with ordered energy in the presence of background molecules of unordered energy. The invention is useful in suppression of background in crucible-type ion sources or in ion sources using orifice-type inlet systems. The apparatus comprises an ion source enclosing an ionizing region, an apertured electrode, means for directing a molecular beam of material to be ionized into the region between the apertured and repeller electrodes in a direction transverse to the optic axis of the source, means for ionizing molecules of the beam in the source, means for applying a D.C. bias between the two repeller electrodes to counteract at least in part the ordered energy of the beam of material and so as to develop an ion beam generally along the optic axis of the source. The ordered energy of the ions resultant from the molecular sample beam results in a very poor focus of these ions on the optic axis in the absence of the referred to offset voltage on the repellers. This offset, or transverse component of propelling potential, counteracts this ordered energy and concentrates the ions on the optic axis. Simultaneously, ions of random energy are for the most part defocused relative to the optic axis and are thus excluded from the ion beam emergent from the ionizing region.

To further purify the analysis, and in its preferred

aspects, we impose an A.C. component on the D.C. propelling potential which sweeps this potential across the optimum potential offset for background ions, and accordingly the ion beam across the optimum focus on the outlet of the ionizing region. This causes the ions of ordered energy to produce a signal at the ion collector having a frequency component corresponding to that of the imposed A.C. signal, while ions of random energy which have a significantly different optimum offset potential will produce a signal at the collector having a frequency characteristic of twice this frequency. These collector signals are easily discriminated.

In preferred form the apparatus of the invention therefore includes means for superimposing an A.C. signal on the repeller electrodes to sweep the ion beam across the aperture in the apertured electrode. The invention also includes a mass spectrometer comprising an ion source as described above, means for separating ions emergent from the source in accordance with their specific mass, collecting means for selectively collecting ions so separated and, in preferred form, means for sensing collected ions discriminately as a function of the characteristic frequency of the ion current developed by the ions of interest at the collecting means.

The invention will be more clearly understood from the following detailed description thereof taken in conjunction with the accompanying drawing, in which:

Fig. 1 diagrammatically illustrates the difference in behavior of sample and background ions in the type of mass spectrometer under consideration;

Fig. 2 is a schematic illustration of a mass spectrometer in accordance with the invention;

Fig. 3 is a section taken on line 3—3 of Fig. 2; and

Fig. 4 is a series of graphical notations illustrating the operation of the mass spectrometer of Fig. 2.

Fig. 1 illustrates diagrammatically a response for a typical ion source on background ions and on sample ions. The ion yield of these two species in terms of ion current is plotted as a function of the repeller offset. The "repeller offset" is a term applied to designate the difference in D.C. voltage applied to the two companion repeller electrodes. It will be observed from the curves in Fig. 1 that because of the ordered energy of the sample ions, a different repeller offset is required to achieve peak ion current than is required for the background ions of generally random energy. A repeller offset of V_0 volts produces the most significant background signal, while an additional offset ΔV is required to develop the optimum sample signal. We have observed this fact and utilized this observation to develop a mass spectrometer which, as previously pointed out, will selectively exclude from the electrical output of the instrument, ion currents resultant on the presence of background ionization.

The mass spectrometer shown schematically in Figs. 2 and 3 comprises in component form the usual ion source **10**, analyzer region **11**, and collector system **12** which, in practice, are all immersed in an evacuated envelope not shown in this drawing. The ion source **10** comprises a housing **13** having an aperture **13A** in its forward wall for emergence of an ion beam **14**.

The ion beam **14** enters the analyzer **11**, which, in this instance, is represented schematically as a conventional 90° magnetic field, one pole **15** of the field forming magnet being shown. The magnetic field is of course established by a companion pole piece to the pole piece **15** and by suitable magnetic circuit between the pole pieces. Such means are conventional and form no part of the present invention. The segregated ion beam is discharged from the analyzer section through an apertured terminal electrode **16** for collection on a collector electrode **17** forming one element of the collection system **12**.

The collector electrode is connected usually externally of the evacuated envelope to an amplifier **18** to amplify the collected ion currents and the amplifier in turn to a sensing means such as a recorder **19**. For use with the present invention, the amplifier **18** is a tuned A.C. amplifier.

The ion source **10** is represented in this instance as provided with a crucible source of a molecular sample. A crucible **20** includes a cavity **21** for receiving a solid sample which, upon being sufficiently heated, emanates as a molecular beam which is collimated through an apertured plate **22** and an aperture **23** in a wall of the housing **13**, the molecular beam passing transversely through the housing **13** through an outlet aperture **24** in the opposite wall of the housing to strike a catcher plate **25** for condensing un-ionized molecules.

An ionizing electron beam **27** is developed as shown in the section view of Fig. 3 in conventional fashion by a filament **28** energized by voltage source **29** and maintained at a negative potential with respect to the housing **13** by a bias battery **30**. The filament is positioned to develop and direct the electron beam **27** through oppositely placed apertures, **31**, **31A** in the housing to strike target **32** which is maintained at a positive potential with respect to the housing by a bias battery **33**. The molecular sample beam and the ionizing electron beam are preferably mutually perpendicular to each other and to the optic axis of the ion source, as represented by the ion beam **14**, so as to intersect at a central point in the ion source resulting in concentrated ionization of the molecular beam at that point. A pair of repeller electrodes **36**, **37** are connected to a D.C. voltage supply circuit **38**, through a voltage divider network **39** to permit variation of the D.C. voltage levels of the two repellers. The housing **13** is maintained at a potential slightly negative with respect to both repellers to develop between the repellers and the outlet aperture of the housing a propelling potential to eject the ions from the housing.

An apertured electrode **42** is maintained at a negative potential with respect to the housing **13**, in this instance ground potential, forming with the housing **13** an accelerating gap for propelling the ion beam **14** into the analyzer. An A.C. component of repeller differential is applied across the two electrodes **36**, **37** through a transformer **44**, the primary of which is connected to A.C. source **45**. The adjustable tap **46** connected across this A.C. circuit enables adjustment of the difference in A.C. signal applied to the two repellers. Variation in D.C. offset is controlled through a bias network **48**, adjustable tap **49** effecting this adjustment.

The operation of the instrument is in general similar to that of conventional sector-type mass spectrometers in that ions are formed within the ionizing region in the electron beam **27** at its point of intersection with the molecular sample beam. Under the influence of the potentials established between the repeller electrodes, the housing **13** and the accelerating electrode **42**, the ion beam **14** is propelled from the ionizing region for separation in the analyzer **11**. The separated ion components are then selectively focused on the collector **17** through the terminal electrode **16** for collection and sensing.

The A.C. component imposed on the repeller electrodes takes advantage of the unique characteristic of this type of instrument in distinguishing sample ions from background ions as a function of the fact that the repeller offset characteristics are different for the two types of ions. By imposing an A.C. voltage on the repellers and biasing this voltage so that, when the A.C. voltage is of zero amplitude, the background ion intensity is at a maximum, then with substantial A.C. amplitude at frequency ω the background ions will produce at the collector electrode frequency components of 2ω and higher, whereas the ion current signal from the sample molecules will have a frequency ω and higher. For this reason by tuning the tuned amplifier **18** to frequency ω, the amplifier will be sensitive only to ions from the sample.

In Fig. 4, curve A illustrates the ion current from sample ions and curve B the ion current from background ions with a repeller offset as represented by curve C. The voltage designations V_0 and ΔV with respect to curve C are cross-referenced to the same designations in Fig. 1 illustrative of the different offset characteristics of the background and sample ions. It is observed from Fig. 4 that with the repeller offset varying at a frequency ω, the sample ion current is at the same frequency and the background ion current a frequency 2ω.

Any conventional means may be employed for sweeping the spectrum of the sample as for example simply changing the fields of the instrument. One typical technique involves variation of the accelerating voltage. In the illustrated circuit this can be accomplished by variations in the variable source **38** while maintaining a proportionate voltage offset between the propellers.

The invention is described with respect to a particular type of molecular source, i.e. a crucible source, and to a particular type of analyzer, although it is not so limited. The invention is useful as embodied with any ion source in which ions are formed with generally ordered rather than random energy so as to be distinguishable as a consequence from background ions. This may be a crucible source as shown, a source in which the sample is volatilized by a high vacuum spark, or a source using orifice-type inlet systems.

We claim:

1. A mass spectrometer ion source comprising an ionizing region, an apertured electrode disposed at one boundary of the region, first and second repeller electrodes disposed at the opposite boundary of the region, means for developing a molecular beam of ordered energy of material to be ionized means for directing the beam of molecules of ordered energy into the region between the apertured and repeller electrodes and transverse to the optic axis of the source, means for ionizing molecules in the beam of material within the region, means for applying a D.C. voltage offset between the two repellers to counteract at least in part the ordered energy of the ions formed in the beam of material and for focusing at least a part of said ions on the electrode aperture, means for varying the voltage offset between the repellers, means for superimposing an A.C. signal between the repeller electrodes to sweep the ion beam across the aperture, and means for varying the amplitude of the A.C. signal.

2. A mass spectrometer ion source comprising an ionizing region, an apertured electrode disposed at one boundary of the region, first and second repeller electrodes disposed at the opposite boundary of the region, means for developing a molecular beam of ordered energy of material to be ionized, means for directing the beam of molecules of ordered energy into the region between the apertured and repeller electrodes and transverse to the optic axis of the source, means for ionizing molecules in the beam of material within the region, means for applying a D.C. bias between the two repellers to counteract at least in part the ordered energy of the ions formed in the beam of material and for focusing at least a part of said ions on the electrode aperture, and means for superimposing an A.C. signal between the repeller electrodes to sweep the ion beam across the aperture.

3. In a mass spectrometer ion source comprising an ionizing region, an apertured electrode disposed at one boundary of the region, first and second repeller electrodes disposed at the opposite boundary of the region, means for directing a molecular beam of material to be ionized into the region between the apertured and repeller electrodes and transverse to the optic axis of the source, means for ionizing molecules in the beam of mate-

rial within the region, means for applying a D.C. bias between the two repellers to counteract at least in part the ordered energy of the ions formed in the beam of material and for focusing at least a part of said ions on the electrode aperture, means for superimposing an A.C. signal between the repeller electrodes to sweep the ion beam across the aperture, an analyzer section to separate ions of differing mass introduced thereinto from the ion source, collector means for collecting ions of a given mass, and a tuned A.C. amplifier tuned to the frequency of the A.C. signal.

References Cited in the file of this patent

UNITED STATES PATENTS

2,370,631	Berry	Mar. 6, 1945
2,587,575	Washburn	Feb. 26, 1952
2,829,259	Foner et al.	Apr. 1, 1958

OTHER REFERENCES

Hutchison: An Electron Current and Energy Regulator for Mass Spectrometer Ion Sources, Review of Scientific Instruments, vol. 25, No. 11, November 1954, pp. 1083–87.