A. P. F. PICO.

AUTOGRAPHIC REGISTER.

APPLICATION FILED JUNE 24, 1918.

1,394,785.

Patented Oct. 25, 1921.

2 SHEETS—SHEET 1.

Fig. I.

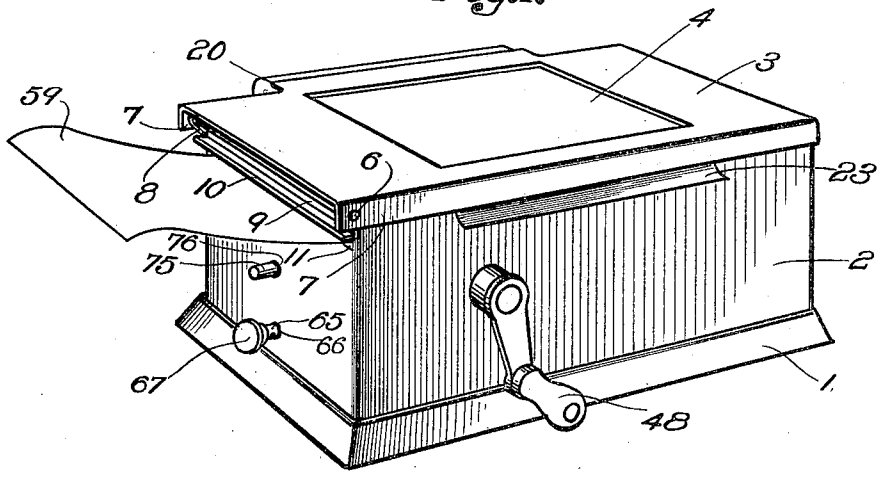

Fig. II.

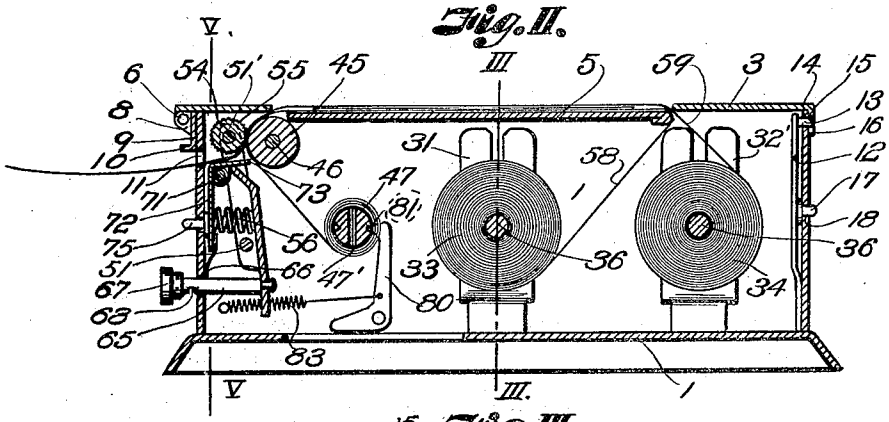

Fig. III.

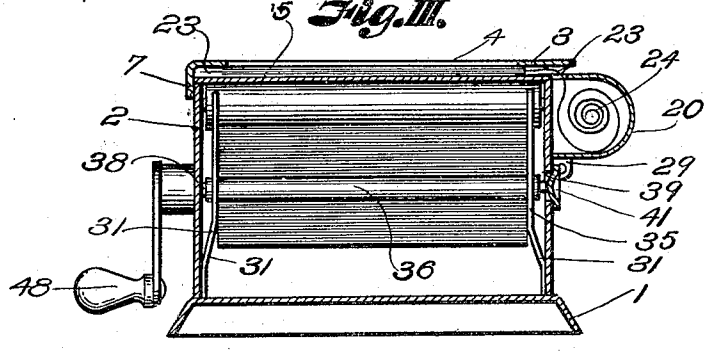

INVENTOR.
Albert P. F. Pico.
BY
Arthur C. Crown
ATTORNEY

A. P. F. PICO.

AUTOGRAPHIC REGISTER.

APPLICATION FILED JUNE 24, 1918.

1,394,785.

Patented Oct. 25, 1921.

2 SHEETS—SHEET 2.

Fig. IV.

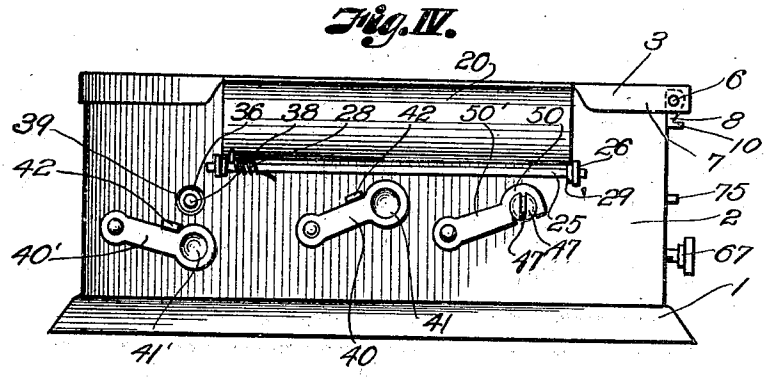

Fig. V.

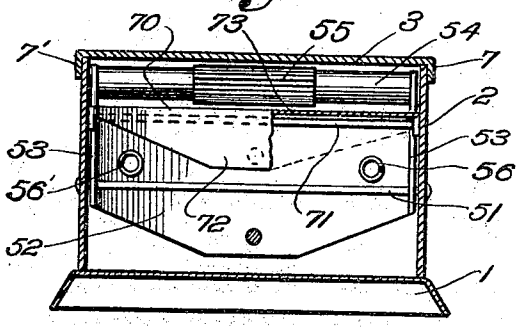

Fig. VII.

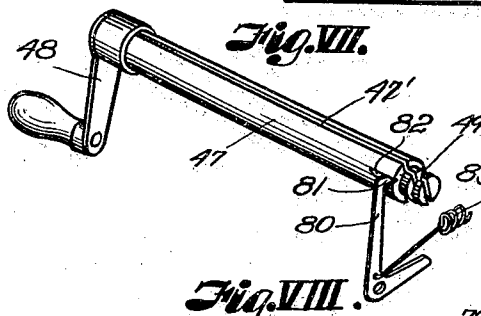

Fig. VIII.

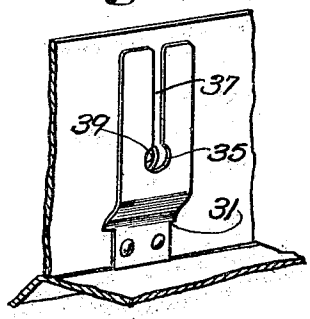

Fig. VI.

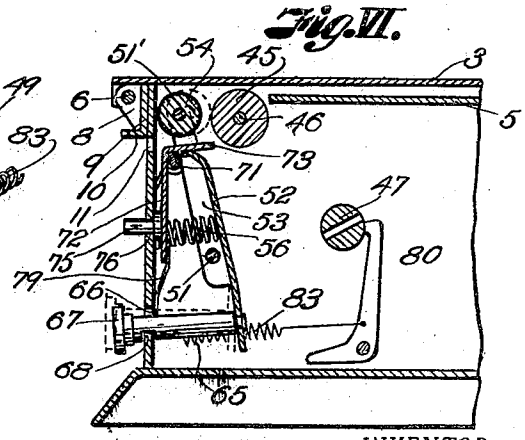

INVENTOR.

Albert P. F. Pico.

BY Arthur C. Brown

ATTORNEY

UNITED STATES PATENT OFFICE.

ALBERT P. F. PICO, OF KANSAS CITY, MISSOURI.

AUTOGRAPHIC REGISTER.

1,394,785. Specification of Letters Patent. Patented Oct. 25, 1921.

Application filed June 24, 1918. Serial No. 241,538.

To all whom it may concern:

Be it known that I, ALBERT P. F. PICO, a citizen of the United States, residing at Kansas City, in the county of Jackson and State of Missouri, have invented certain new and useful Improvements in Autographic Registers; and I do declare the following to be a full, clear, and exact description of the invention, such as will enable others skilled in the art to which it appertains to make and use the same, reference being had to the accompanying drawings, and to the letters and figures of reference marked thereon, which form a part of this specification.

My invention relates to autographic registers and more particularly to a structure of that character wherein a duplicate record slip may be made at the time of making a permanent record, and wherein the record strips are made in rolls that are stored within a machine and so arranged that they may be drawn from the rolls across a writing table where the record is made; one record being re-wound within the machine and the other discharged therefrom beneath a cutter plate whereby portions may be severed from the body of the strip after a record is made.

It is an object of the invention to provide a device of this character that may be made small and compact and may be used conveniently as a desk fixture for recording telephone calls or other memoranda so that the recorder may keep a permanent record of calls and may also furnish a memoranda of the call to the person called.

It is a further object of the invention to provide improved details of structure for permitting a ready and easy replacing or removal of the record rolls and also improvements in structure for facilitating the threading of the two record strips between the forwarding rollers, and respectively to the winding shaft and discharge opening of the machine.

In accomplishing these objects I have provided improved details of structure the preferred forms of which are illustrated in the accompanying drawings, wherein:—

Figure I is a perspective view of an autographic register constructed according to the present invention.

Fig. II is a central, longitudinal vertical section of the same.

Fig. III is a transverse, vertical, section on the line III—III Fig. II.

Fig. IV is a side elevation, showing the location of the carbon paper trough and particularly illustrating the disposition of the arms whereby the roll supporting shafts are supported in functional position.

Fig. V is a transverse, vertical section on the line V—V Fig. II, particularly illustrating the strip threading and forwarding mechanism.

Fig. VI is an enlarged, horizontal, sectional view showing the threading mechanism in open position.

Fig. VII is a detail perspective view of the record strip winding shaft.

Fig. VIII is a detail perspective view of a roll supporting and tensioning plate.

Referring more in detail to the drawings:

1 designates the base of the device which preferably comprises a single rectangular sheet of metal, bent downwardly about its edges to form a more rigid structure and to enhance the external appearance of the device by making the base appear heavier.

Mounted on the base is a rectangular, open top housing 2, wherein the record rolls and the forwarding mechanism, presently described, is contained; the housing being provided with a cover plate 3 which is pivotally mounted at one end of the housing, so that it may be opened upwardly to permit access to the record rolls that may be stored within the machine, and has a central recess or opening 4 wherethrough a writing table 5 is exposed.

The preferred means for mounting the cover plate 3 comprises a cross shaft 6 that is located at one end of the housing 2 and extends at its opposite ends through downturned, longitudinal edge portions 7—7′ of the cover plate which overlie the sides of the housing, and through out-turned wings 8 at the opposite ends of a cross plate 9 that is fixed on the outer face and adjacent the upper edge of the forward end wall of the housing. The plate 9 also has an outturned edge portion 10 disposed above a horizontal slot 11 in the housing wall, wherethrough the upper record strip, as presently described, is discharged from the housing, the plate serving as a tearing bar whereby the record slips may be severed from the strip.

When closed, the cover is retained in position by means of a latch mechanism com-

prising a spring metal plate 12 that is fixed at its lower end within and adjacent the base of the housing and at its upper end has a tooth 13 extending therefrom through an aperture 14 in the housing wall and into an aperture 15 registering therewith in an end flange 16 turned downwardly from the cover plate. The latch may be actuated to release the tooth from the plate by pressure on a push pin 17 that extends from the plate and through an opening 18 in the end wall of the housing.

The writing table 5 comprises a single, flat metal plate which is supported at its opposite longitudinal edges on the upper edges of the opposite side walls of the housing, and is slightly inset by cutting away portions of the walls so that it will be lowered sufficiently so as not to interfere with closing of the cover plate and will be retained securely in place beneath the recess 4.

Mounted at one side of the housing 2 is a trough 20, provided at its upper side with a slot 21 wherethrough a carbon paper strip 23 may be drawn from a roll 24 that is mounted within the trough; the trough being so located that the carbon paper strip drawn therefrom may be extended beneath the cover plate 3 and across the writing table 5. The trough is hingedly mounted on the housing by means of a rod 25 that is fixed at its opposite ends in ears 26, stamped outwardly from the housing metal, and extends through ears 29 depending from the end walls of the trough; the trough being normally retained in closed position by means of a spring 28 that is coiled about the shaft and at its opposite ends bears against the side wall of the housing and base of the trough, but being yieldingly movable to open position against the tension of the spring when it is desired to remove or replace a carbon paper roll therein.

Mounted at oppositely disposed points within the housing are paired roll supporting plates 31 and 32 between which the record rolls 33 and 34 respectively are mounted; the plates comprise body portions of spring metal and are fixed at their lower ends to the sides of the housing adjacent the base, and have offset upper end portions 31'—32' spaced from the housing walls which are adapted to yieldingly bear against the opposite ends of record rolls that may be mounted therebetween to effect a desirable tension on the strips as they are wound through the machine.

The upper portions of the supporting plates 31 and 32 are each provided with openings 35 wherein the ends of roll supporting axles 36, whereon the record rolls are wound, may be revolubly contained, and leading from said openings to the upper ends of the plates are slots 37 wherethrough the end trunnions 38 of the axles may be moved when the rolls are inserted within the machine.

The length of the roll supporting axles between the trunnions is a little greater than the distance between the yieldable portions of the supporting plates and it is necessary that the latter be pressed apart in order to locate the axles within the slots, but the plates spring back to position as soon as the axle ends move into the openings 35 and thereby prevent the axles from being unseated.

One side wall of the housing 2 is provided with openings 39 located in alinement with the roll supporting axles 36, so that the latter may be removed from supported position therethrough when it is desired to remove a roll from the housing. Normally these axles are prevented from being displaced from position through the housing openings by means of spring arms 40—40' which are pivotally mounted on the exterior of the housing wall and have free ends adapted to cover and uncover the openings. The arms are provided at their end with inwardly pressed cups 41—41' which are adapted to seat within and close the said wall openings so that the axles may not slip from functional position. The arms are provided on their upper edges with outturned lips 42 which serve as handles whereby they may be moved against their yielding pressure to uncover the openings 39 when it is so desired in order that the shafts may be removed.

Adjacent the forward end of the writing table 5 is a transverse roller 45 that is freely revoluble on a shaft 46. Mounted beneath the table preferably in alinement with the axles 36, is a winding shaft 47, provided with a longitudinally extending slot 47' the slot having an open and a closed end which opens to one end thereof, the said shaft being journaled at its opposite ends in the side walls of the housing and at its closed end being provided with a crank 48 whereby the shaft may be revolved.

The winding shaft 47, is slidable in the wall bearings, but is held in position by means of the crank head fixed at one end thereof and at its opposite end has an annular channel 49 about which the notched head 50 at the free end of an arm 50' that is pivotally mounted on the housing wall is adapted to seat, the arm 50' being fixed on the exterior of the housing and when in locked relation with the shaft holding the same in functional position but not preventing its revolving so that a strip may be wound thereon. When it is desired to remove the shaft from the housing the head 50 is unseated from the shaft channel and the shaft is moved from the housing through the opposite housing wall, the slot in the shaft being extended to the channeled end thereof so

that the end of the record strip that may be threaded therethrough may slip from the shaft without being torn and without causing damage to the roll.

Pivotally mounted on a transverse shaft 51 adjacent the forward end of the housing is a plate 52, the same being located transversely of the housing and provided at its opposite ends with laterally turned wings 53—53′ which receive the shaft 51 to support the plate and which extend upwardly from the plate and at their upper ends carry a transverse shaft 51′ whereon a roller 54 having a roughened face 55 is freely revolubly mounted.

The roller 54 is yieldingly tensioned to bear against the roller 45 by means of short coil springs 56—56′ which are seated to bear at their inner ends against the opposite ends of the plate 52 and against the end wall of the housing.

When the device is in use, record strips 58 and 59 are drawn respectively from the rolls 33 and 34 over the rounded end 60 of the table 5, across the table and between the rollers 45 and 54, the strip 59 then being extended from the housing through the slot 11 while the strip 58 is extended through the slot 47′ of the winding shaft 47 and on winding operation of the crank 48 being drawn from the roll 33 across the writing table and wound on the shaft. At the same time the frictional contact of the two rollers 45 and 54 will cause the strip 59 to be forwarded from the housing. With the record strips extending across the table in this manner, the carbon paper strip 23 is extended transversely across the table between the strips and is held at the side opposite the trough 20 by being clamped between the housing wall and down-turned edge of the cover plate so that it may be held securely in place while the record strips are forwarded.

To facilitate threading of the strips between the rollers 45 and 54, I provide means for moving the said rollers apart. This means comprises a push pin 65 which extends slidably through an aperture 66 in the housing end wall and at its inner end is fixed to the plate 52 below the pivotal point thereof. At its outer end the pin is provided with a button 67 and adjacent the button with a notch 68. To spread the rollers apart, the operator presses inwardly on the button 67 which rocks the plate 52 on its pivotal mounting and moves its upper end outwardly from the roller 45 and the plate may be held in this position against the tension of the springs 56—56′ by seating the notch 68 over the edge of the aperture 66.

After the ends of the record strips have been projected through the space between the rollers 45 and 54, to guide the same either toward the slot 11 or the winding shaft I have provided a guide plate 70. This plate is pivotally mounted on a transverse shaft 71 that extends across the housing adjacent the slot 11 and has a downwardly depending portion 72 and at its upper end has an inwardly turned guide lip 73 which underlies the roller 54 and extends adjacent to the roller 45. At the lower edge the depending portion of the plate is provided with a push pin 75 which extends through an aperture 76 in the housing wall, whereby the plate may be rocked on its mounting so that the lip 73 will be moved to guide the record strips to either the winding shaft or housing slot 11. Normally the plate is so retained, by a spring 79, which is fixed at one end to the housing wall and bears at its opposite end against the lower inner portion of the plate 72, that it is spaced from the lower side of the roller 54 and normally extends across the space between rollers 54 and 45 to guide the paper through the opening 11, but by inward pressure on the pin 75 the plate may be moved to close the passage to the slot 11 and open the passage to the winding shaft.

In order to retain the tension on the lower record strip I provide a ratchet dog 80 which is pivoted at its lower end to the inner face of the housing and at its upper end has a tooth 81 adapted to seat in notches 82 in the periphery of the winding shaft, so that the latter can not unwind. The dog is yieldingly held in engagement with the ratchet surface by means of a spring 83 that is fixed at one end to the housing and at its opposite end to the dog between its pivotal and contact points. The base of the housing is also provided with an opening 84 whereby access may be had to the dog to release it from contact with the shaft when it is so desired.

In using the device, the record rolls 33—34 are first placed in position within the housing by lowering the same between the tensioning plates 31 and 32; the ends of the axles 36 being moved along the plate slots 37 until the axles seat in the openings 35. The strip 58 is then extended from the roll 33 over the rounded end of the writing table, across the table, between the rollers 45 and 54, after the latter have been spaced apart by operation of the push button 65, and its end extended into the slotted winding shaft.

The carbon paper strip 23 is then drawn from the trough 20 through the slot 21 and extended across the table 5 above the strip 58.

The strip 59 is then drawn from the roll 34, across the table 5 and the carbon paper strip 23 and extended between the rollers 45 and 54 and through the slot 11 to the exterior of the housing.

Before the strip 58 is threaded to the winding shaft the guide plate is rocked by inward pressure on the pin 75 to move the

edge of the upwardly inclined lip 73 against the roller 54 to prevent the strip going to the slot and to guide the same into the housing toward the winding shaft. After the first strip is threaded this pin is released and the plate moves back to normal position which so locates the lip 73 that the strip 59, when extended between the rollers will be guided thereby to the slot 11.

After the strips have been threaded, the push pin 65 is released to allow the rollers 45 and 54 to be moved tightly together to clamp the strip therebetween and the upper strip will be forwarded across the table as the lower is wound on the shaft.

When the strips have been properly threaded the top is lowered to position and latched. When a memorandum or a sale is made, it is entered on the top strip through the opening 4 in the cover plate and this entry is transferred by means of the carbon sheet onto the lower strip. The recorder then operates the winding crank to advance the strip within the machine; the upper strip being forwarded to the exterior of the machine through the slot 11 and the recording web being wound on the shaft. When the recorded section of the strip has been advanced from the machine it may be torn from the body of the strip by pulling it against the edge of the tearing plate 10 and the operation may be repeated for each successive record made.

When the strip 58 has been completely wound on the shaft, the roll may be removed from the machine. This is accomplished by releasing the axle 47 from the arm 50′ and sliding the axle from the housing. The axles 36 are removed from the housing by moving the arms 40—40′, so that the end caps 41—41′ will uncover the openings 39 and the axles will be permitted to slide from their bearings. After the roll and axles have been removed, new record rolls may be inserted through the top of the machine as previously described and threaded across the writing table and to the forwarding mechanism.

It is apparent that with this construction a simple and compact arrangement is provided, the record rolls may be easily placed or removed and threading of the strips to the winding shaft and housing opening is made easy and may be more quickly done than is ordinarily possible.

Having thus described my invention what I claim as new therein, and desire to secure by Letters-Patent, is:—

In an autographic register, a housing comprising side walls, having openings at oppositely disposed points therein, a winding shaft revolubly supported at its opposite ends in said openings and having a longitudinally extending slot therein opening at one end of the shaft, and an annular channel adjacent the open end of the shaft and a notched surface adjacent the channel, the said shaft being movable to and from said housing through said openings, a crank fixed at the end of the shaft opposite the annular channel, an arm pivotally mounted to the housing wall and having a latch head adapted to fit about the channel portion to retain the shaft in functional position, and an arm pivotally mounted on the housing wall having a tooth adapted to engage the notched surface of the shaft to prevent unwinding of the same.

In testimony whereof I affix my signature.

ALBERT P. F. PICO.