Jan. 8, 1924. 1,480,257

C. F. GERLINGER

LUMBER CARRIER

Filed July 17, 1922 3 Sheets-Sheet 1

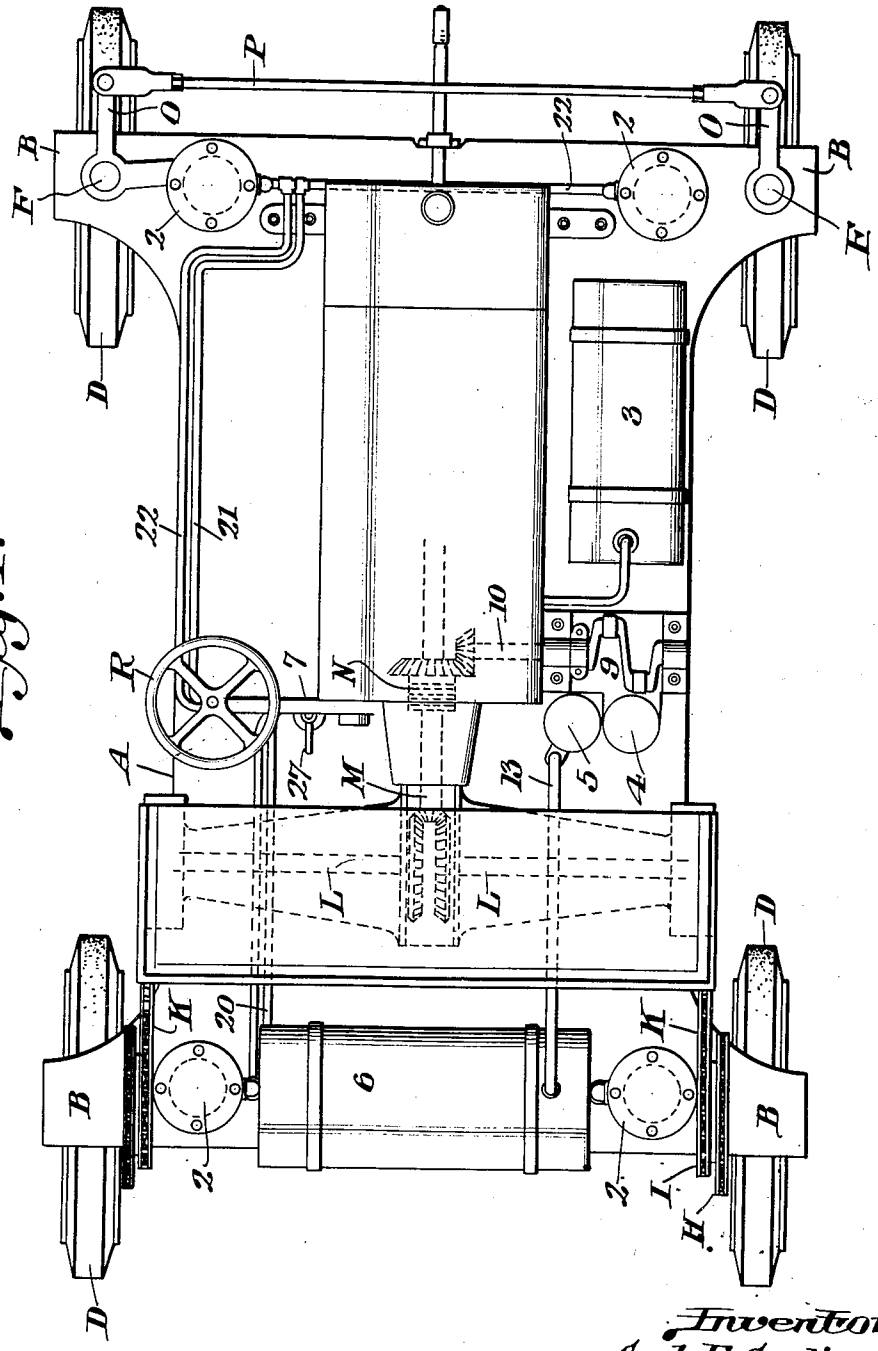

Fig. 1.

Inventor
Carl F. Gerlinger
by his Attorneys
Bredon & Wright

Jan. 8, 1924. 1,480,257

C. F. GERLINGER

LUMBER CARRIER

Filed July 17, 1922 3 Sheets-Sheet 2

Fig. 2.

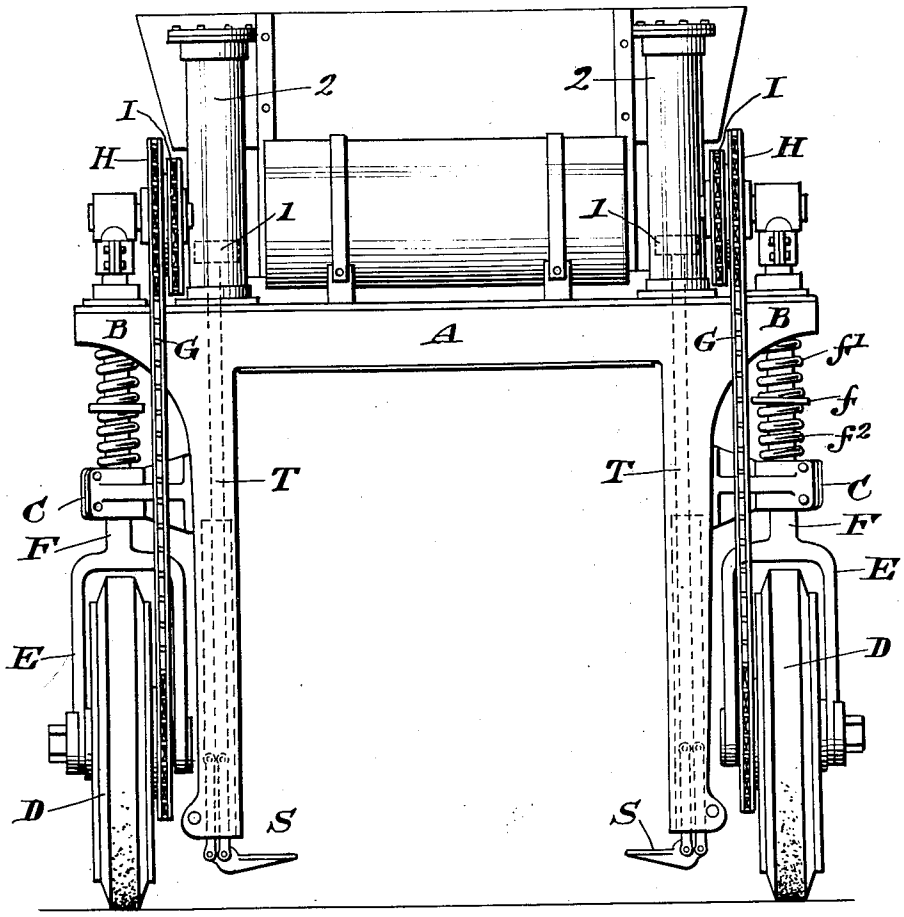

Fig. 3.

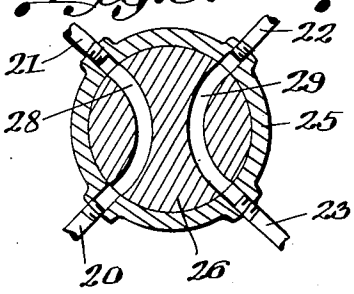

Fig. 4.

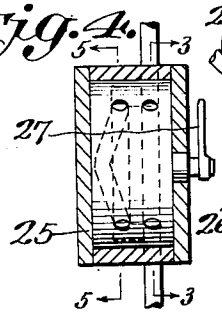

Fig. 5.

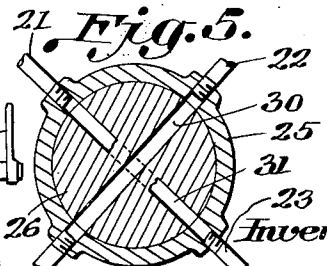

Inventor
Carl F. Gerlinger
by his Attorneys
Baldwin & Wight

Jan. 8, 1924. 1,480,257

C. F. GERLINGER

LUMBER CARRIER

Filed July 17, 1922 3 Sheets-Sheet 3

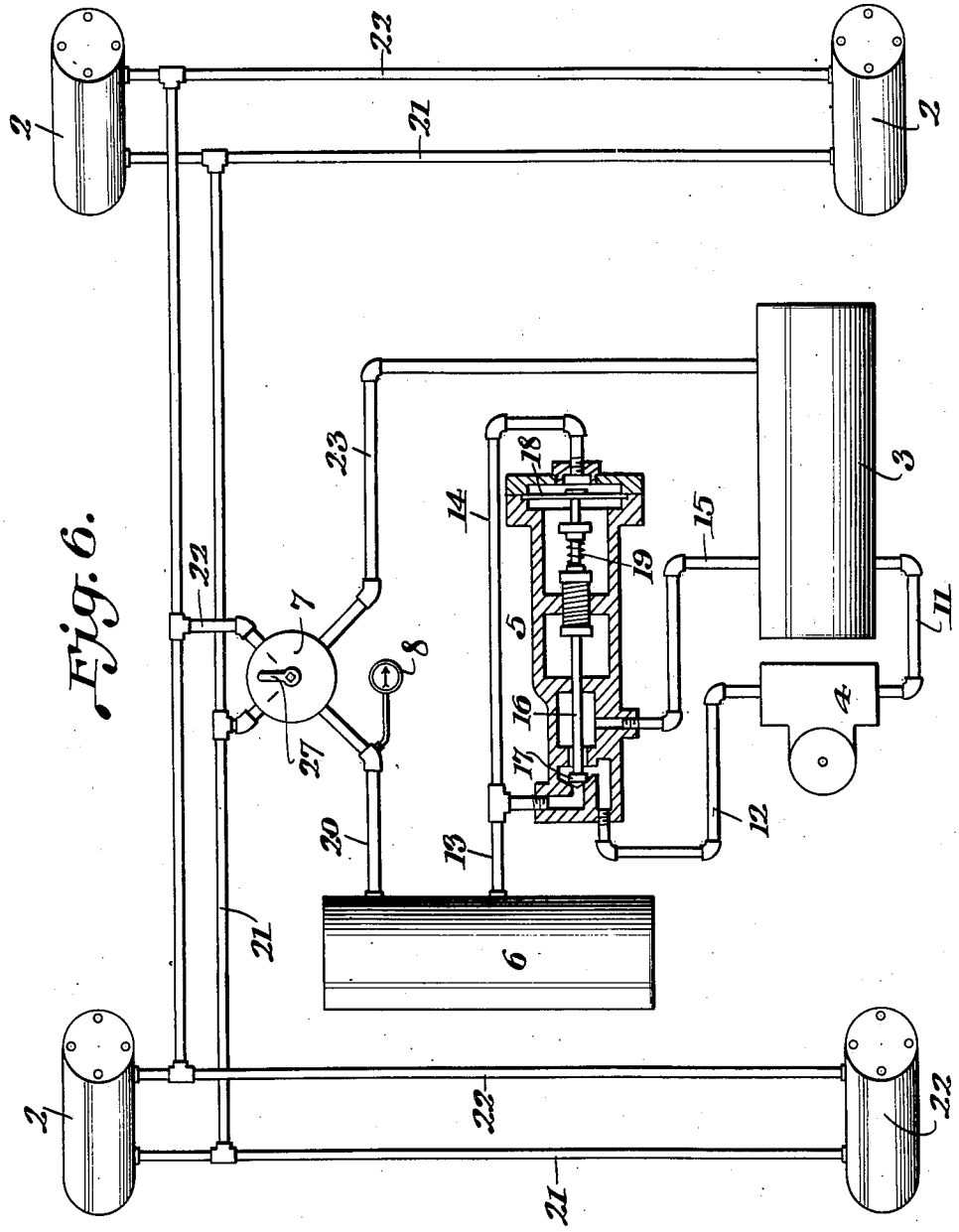

Fig. 6.

Inventor
Carl F. Gerlinger
by his Attorneys
Baldwin Wright

Patented Jan. 8, 1924. 1,480,257

UNITED STATES PATENT OFFICE.

CARL F. GERLINGER, OF DALLAS, OREGON.

LUMBER CARRIER.

Application filed July 17, 1922. Serial No. 575,678.

To all whom it may concern:

Be it known that I, CARL F. GERLINGER, a citizen of the United States, and a resident of Dallas, in the county of Polk and State of Oregon, have invented certain new and useful Improvements in Lumber Carriers, of which the following is a specification.

This invention relates to lumber carriers of the type in which a load of lumber may be raised, carried, and deposited in any desired place, and is illustrated in connection with a machine of the general character shown in my co-pending application Serial No. 548,177 filed March 30, 1922.

An object of the invention is to provide improved means for raising and lowering the lifting shoes which will operate smoothly and efficiently and will obviate the necessity for the numerous gear connections generally used.

Another object of the invention is the application of hydraulic power, using any suitable fluid, such as water, oil or air, to a lumber carrier for raising and lowering the lifting shoes.

Another object of the invention is the provision of such mechanism that will be simple and easily controlled and in which the fluid will be automatically controlled and kept at the desired pressure.

Other objects will be apparent from the following detailed description and the appended claims.

In the drawings:

Figure 1 is a top plan view of the lumber carrier showing the general relationship of the parts.

Figure 2 is a rear view.

Figure 3 is a section through the valve mechanism taken on the line 3—3 of Figure 4.

Figure 4 is a vertical section through the valve mechanism.

Figure 5 is a section through the valve mechanism taken on the line 5—5 of Figure 4.

Figure 6 is a diagrammatic view of the hydraulic apparatus, showing the relationship of the various elements thereof, with the automatic governor in section.

A main frame A has outwardly extending corners B and brackets C secured to the frame at a desired distance below the corners B. Wheels D are mounted in forks E having shafts F that are mounted in the corners B and brackets C. A member f is rigid on each shaft F and between the member f and the upper corner of the frame is a spring f', while a spring f^2 is located between the member f and the bracket C, thus affording a spring suspension. Sprocket chains G pass around the axles of the rear wheels D and sprocket wheels H located on shafts on top of the frame. On the same shafts are other sprocket wheels I from which chains K lead to shafts L which are geared to the main shaft M of the engine, a clutch N of any desired character being employed. In this manner the rear wheels are driven from the engine. The upper end of each shaft F of the front wheels is provided with a short arm O and the arms are connected by a rod P. Steering movement is transmitted from the steering wheel R to one of the front shafts F in any usual or desired manner. Lifting shoes S are pivoted to bars T which slide vertically in guide ways. All of these elements in themselves form no part of my present invention and may be of any desired character. For the sake of illustration they have been shown as substantially the same as in my prior application No. 548,177, referred to above.

In said prior case the bars T were formed as rack bars and operated through mechanism there shown. In the present invention these bars have connected to their upper ends pistons 1 which slide in vertical cylinders 2 mounted near the corners of the top frame of the machine. It is obvious that by supplying fluid pressure to one side or the other of the pistons 1, the lifting shoes may be moved in the desired direction together with any load carried thereby.

For this purpose there is provided a reservoir 3, a pump 4, a governor 5, a pressure tank 6, a control valve 7, a gage 8, and an appropriate system of piping. The relationship of these parts is diagrammatically shown in Figure 6, and the various elements may in general be located in accordance with the exigencies of space. It is desirable, however, that the control valve be located near the steering gear, or in some other readily accessible place. The crank shaft 9 of the pump is connected to a shaft 10 which is geared as shown in Figure 1 to the main shaft M of the engine.

A pipe 11 affords communication between the reservoir 3 and the pump 4, and the fluid, which is of any desired character, is forced

by the pump from the reservoir through a pipe 12 to the governor and thence through a pipe 13 to the pressure tank. The pipe 13 has a branch 14 communicating with the other end of the governor casing, and a return pipe 15 leads from the governor back to the reservoir.

The governor may be of any desired character but as shown it comprises a casing having a sliding valve stem 16 therein. This valve stem has a valve 17 at one end and is connected to a diaphragm 18 at the other end at the opposite side of which diaphragm is located the pipe 14. A spring 19 surrounds the valve stem between a fixed abutment and a lug on the stem, and normally holds the valve in position to open communication between the pipes 12 and 13, and allow the fluid to be pumped into the pressure tank.

When the pressure in the tank and the pipes 13 and 14 reaches a predetermined limit at which time it is stronger than the spring 19, it will move the valve to the position shown in Figure 6, closing communication between the pipes 12 and 13 and opening communication between the pipes 12 and 15. The pump may then run as usual, but the fluid will merely be circulated from reservoir to pump through pipe 11, to governor and back to reservoir through the pipe 15. Whenever, for any cause, the pressure in the system falls below a point where it is greater than the strength of the spring, the spring will move the valve to open communication between the pipes 12 and 13 and close it between the pipes 12 and 15.

Other forms of governors may be employed, but the above is simple and well adapted for the purpose. The pressure in the cylinders 2 can never exceed a certain predetermined amount, which, if desired, may be varied by providing means for tensioning the spring 19. Automatic stops and holding mechanism are thereby dispensed with, since when the lifting shoes are moved to one extreme position, the pressure will be held uniform and thereby hold them in said position, until the control valve is turned to release the pressure and move the pistons in the opposite direction. No harm can be done if the valve is inadvertently left open since only a definite pressure can be placed upon the parts even if the engine continues running.

The system employed is a closed system, in which when the fluid is admitted to one end of the cylinders 2 it is allowed to escape from the other end of said cylinders back to the reservoir. A control valve is provided for properly opening and closing the necessary passageways. Various types of valves may be employed, but the one now to be described is simple and efficient.

From the control valve 7 a pipe 20 communicates with the pressure tank 6, another pipe 21 by appropriate branches with the bottom of each of the cylinders 2, a third pipe 22 by similar branches with the top of the cylinders 2, and a fourth pipe 23 leads from the valve to the reservoir 3. In the valve casing 25 rotates the valve proper or valve stem 26 turned by a handle 27 to either of two operative positions or to a central neutral position.

In the valve stem 26 are four passages. Two of these passages 28 and 29 are of the form shown in Figure 3, and when the stem is turned to the proper position, passage 28 opens communication between pipe 20 and pipe 21, permitting the fluid under pressure to flow from the pressure tank 6 to the lower end of the cylinders 2 and raise the pistons 1 therein, thereby lifting the shoes S and any load that may be carried thereby. At the same time, passage 29 opens communication between pipe 22 and pipe 23, permitting the fluid to flow from the top of the cylinders above the pistons back to the reservoir.

Two other passages 30 and 31 are arranged in a different plane with their outer ends turned up to communicate with the pipes when the valve stem is properly turned. When the valve is set in this second position, passage 30 opens communication between the pipe 20 from the pressure tank to the pipe 22 leading to the tops of the cylinders 2 above the pistons 1, while at the same time, passage 31 opens communication between pipe 21 leading from the bottom of the cylinders and pipe 23 leading to the reservoir, thus permitting the fluid to flow back from the bottoms of the cylinders to the reservoir.

The upturned ends of the passages 30 and 31 are indicated by dotted lines in Figure 4, while it is also to be noted that the passage 31 dips to pass under the passage 30, since each passage lies substantially on a diameter of the valve stem, and they must not communicate.

The operation of the device will be apparent from the above description but may be briefly recapitulated as follows. When the shoes are in the position shown in Figure 2, they are engaging under a load, as fully set forth in the prior application. The valve is now turned to the Figure 3 position allowing fluid under pressure to enter the cylinders beneath the pistons therein, thereby raising the pistons and the bars T carrying the lifting shoes S. When the desired limit of movement is reached, the valve may be turned to neutral position, or, if this is not done, the automatic governor will prevent the pressure passing a predetermined point.

If it is desired to lower the load, the valve is turned to the Figure 5 position,

allowing fluid to pass from the tank to the top of the cylinders and force the pistons downwardly. In both cases, the line of communication from the opposite end of the cylinders to the reservoir is opened, permitting the fluid to return from the cylinders to the reservoir as previously explained.

It is obvious that different forms of valves or governors may be employed, and the form and arrangement of other parts of the apparatus may be varied without departing from the spirit of the invention. In general the invention is to be regarded as limited only by the scope of the appended claims.

I claim as my invention:

1. A lumber carrier comprising a frame, hydraulic cylinders carried thereby, a piston in each cylinder, lifting shoes to engage a pile of lumber and lift the same, one of the shoes connected to each piston, a pressure tank, a reservoir, a pump for forcing fluid from the reservoir to the pressure tank, means for opening communication between the pressure tank and either side of the pistons and simultaneously opening communication between the other side of the pistons and the reservoir to either lift or lower the load as desired, and automatic governing means for bypassing the fluid from the pump to the reservoir when a predetermined pressure is obtained in the pressure tank, whereby the load may be held raised without danger even if the above named communications remain open.

2. A lumber carrier comprising a frame, hydraulic cylinders carried thereby, a piston in each cylinder, means connected to the pistons for raising a load of lumber, means for operating the pistons in either direction, automatic means for controlling the power exerted by the operating means, and means for cutting off the operating means and thereby holding the pistons in any position to which they have been moved.

In testimony whereof, I have hereunto subscribed my name.

CARL F. GERLINGER.