Office de la Propriété Intellectuelle du Canada
Un organisme d'Industrie Canada

Canadian Intellectual Property Office
An agency of Industry Canada

CA 2461301 C 2012/01/31

(11)(21) 2 461 301

(12) BREVET CANADIEN
CANADIAN PATENT

(13) C

(22) Date de dépôt/Filing Date: 2004/03/16

(41) Mise à la disp. pub./Open to Public Insp.: 2004/11/05

(45) Date de délivrance/Issue Date: 2012/01/31

(30) Priorité/Priority: 2003/05/05 (US10/441,504)

(51) Cl.Int./Int.Cl. *F16L 55/18* (2006.01),
F16L 55/1645 (2006.01)

(72) Inventeurs/Inventors:
KAMPBELL, NORMAN E., US;
CUBA, LEE R., US

(73) Propriétaire/Owner:
INLINER TECHNOLOGIES, LLC, US

(74) Agent: SMART & BIGGAR

(54) Titre : PROCEDE ET APPAREIL POUR LA REPARATION DES TUYAUX
(54) Title: PROCESS AND APPARATUS FOR REPAIRING PIPES

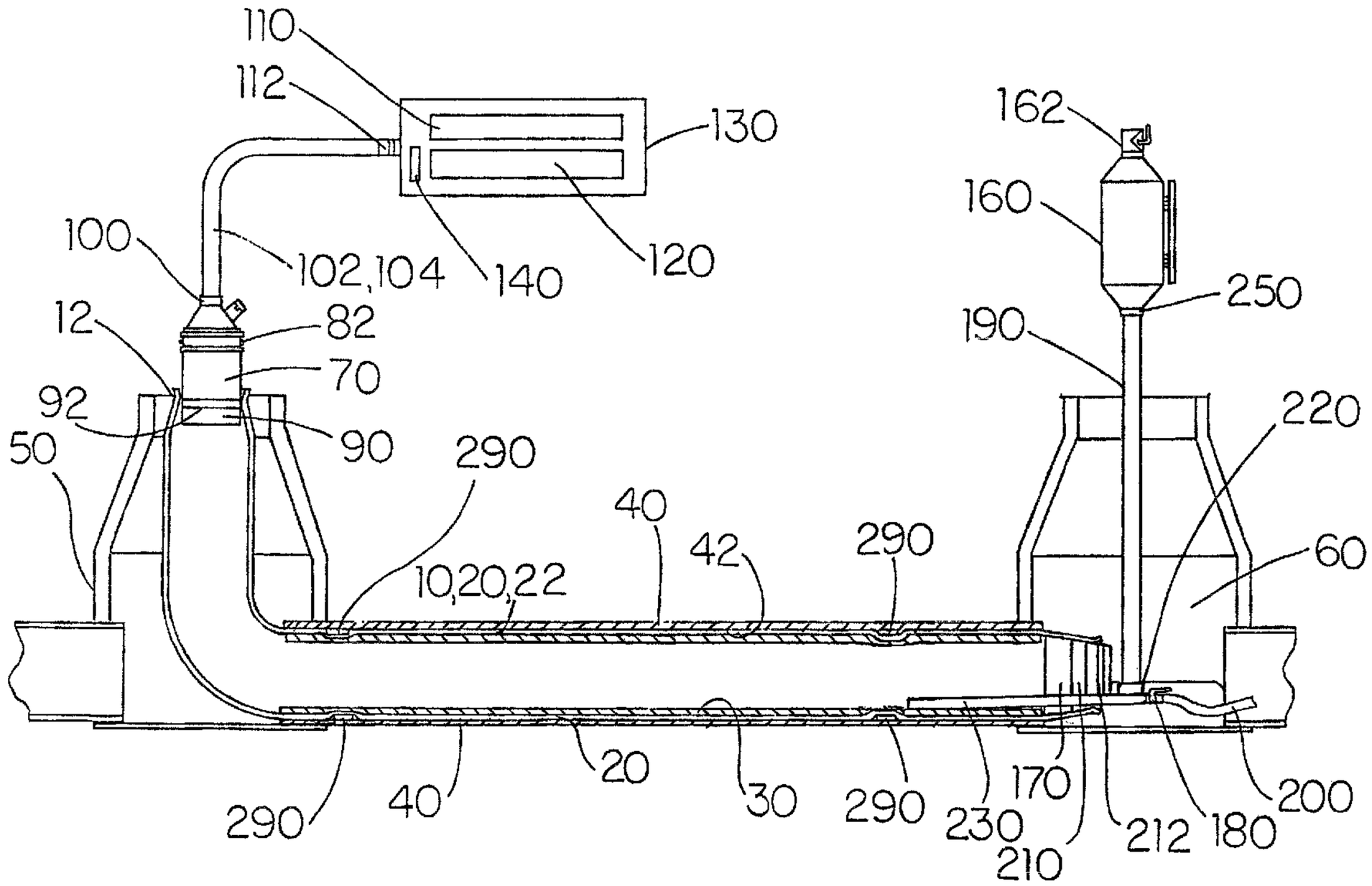

(57) Abrégé/Abstract:
A two-stage process for repairing pipes at elevated temperatures and at elevated pressure. The process comprises the steps of preparing and displacing a hose assembly within the pipeline needing repair. A pressure medium is then introduced into the hose assembly raising the first temperature to initiate and facilitate the cross-linking reaction, and then raising the temperature to a second temperature range and pressure to cure or harden the resin. Novel manifolds and access tubes which allow the practicing the process safely are also provided.

PATENT

Norman E. Kampbell
Lee R. Cuba

ABSTRACT OF THE DISCLOSURE

A two-stage process for repairing pipes at elevated temperatures and at elevated pressure. The process comprises the steps of preparing and displacing a hose assembly within the pipeline needing repair. A pressure medium is then introduced into the hose assembly raising the first temperature to initiate and facilitate the cross-linking reaction, and then raising the temperature to a second temperature range and pressure to cure or harden the resin. Novel manifolds and access tubes which allow the practicing the process safely are also provided.

51344-43

PROCESS AND APPARATUS FOR REPAIRING PIPES

Field of the Invention

The disclosed invention relates generally to a process for repairing pipelines, specifically a high temperature and high pressure process for curing resin impregnated in a flexible liner used to line or repair the inner surface of a segment of pipe or pipeline.

Background of the Invention

Conventional process for lining an inner surface of a pipe use resin impregnated felt. However, the conventional process requires extensive time to allow the resin to cure and harden. The time delay causes unnecessary expense in manpower time and delay in repairing pipes.

Summary of the Invention

Aspects of the present invention enable the relining process in general, and the resin curing process in particular to be accomplished in a more timely manner than conventional processes. The methods described herein allow the resin to be accelerated under high temperature and high pressure, which allows the resin to cure at a faster rate than conventional methods.

According to one aspect of the present invention, there is provided a process of lining a pipe, the process comprising the steps of: a. isolating a segment of pipe requiring relining; b. preparing a hose assembly, the hose assembly comprising a flexible liner impregnated within a resin; c. introducing the hose assembly into the segment of pipe requiring relining; d. expanding the hose assembly so that the hose assembly contacts an inner surface of the pipe by injecting a heated pressurized medium into the hose assembly; e. elevating the temperature of the hose assembly to a first temperature range to allow for cross-linking the resin; f. elevating the temperature of the hose assembly to a second temperature range; g. maintaining

the temperature of the hose assembly within the second temperature range for a selected time to allow curing of the resin; and h. cooling the hose assembly.

According to another aspect of the present invention, there is provided a process of lining a pipe, the process comprising the steps of: a. isolating a segment of a pipe requiring relining, the pipe having an inner surface; b. preparing a hose assembly, the hose assembly comprising a flexible liner impregnated with a resin; c. introducing the hose assembly into the segment of pipe requiring relining; d. removably attaching a plurality of thermocouples to selected locations on the inner surface of the segment of pipe; e. removably securing a first manifold to the first end of the hose assembly and removably securing a second manifold to the second end of the hose assembly; f. expanding the hose assembly so that the flexible liner contacts the inner surface of the pipe by injecting a heated pressurized medium into the hose assembly; g. elevating the temperature of the hose assembly to a first temperature range to allow for cross-linking the resin; h. monitoring the thermocouples until the cross-linking reaction exotherms; i. elevating the temperature of the hose assembly to a second temperature range; j. maintaining the temperature of the hose assembly within the second temperature range for a selected time sufficient to allow for the curing of the resin; and k. cooling the hose assembly.

51344-43

Brief Description of the Drawings

Figure 1 shows a cross-section view of a sewer pipe and the devices used to practice the disclosed invention;

Figure 2a is a perspective view of the upper portion of the first manifold;

Figure 2b is a perspective view of the lower portion of the first manifold;

Figure 3a is a cross-section view of the upper portion of the first manifold;

Figure 3b is a cross-section view of the lower portion of the first manifold;

Figure 4 is a fragmentary view of the second manifold in the pipe;

Figure 5A is a perspective view of the second manifold;

Figure 5B is a cross-section view of the second manifold;

Figure 5C is an end view of the second manifold;

Figure 6 is a perspective view of a length of an extension tube having an access relief; and

Figure 7 is a perspective view of a length of an extension tube without an access relief.

Detailed Description of Specific Embodiments

The disclosed inventions relate generally to a process for repairing pipelines, specifically a high temperature and high pressure process for curing resin impregnated in a flexible liner used to line or repair the inner surface of a segment of pipe or pipeline, and apparatus used to practice the several embodiments of the disclosed process.

The first step in the disclosed process of lining a pipe comprises isolating a segment of pipe requiring relining. The next step requires preparing a hose assembly comprising a flexible liner impregnated within a resin. The hose assembly is then inserted into the segment of pipe requiring relining so that it extends generally longitudinally through the pipe. The hose assembly is then closed at each end to allow it to be selectively inflated, heated or cooled, and at least one end is connected to a source capable of inserting a pressurized medium to a source capable of inserting a gas into the hose assembly. Thermocouples, or other means for measuring temperature, are placed at selected locations on the inner surface of the segment of pipe. By injecting a pressurized medium into the hose assembly, the hose assembly is expanded so that the hose assembly contacts the inner surface of the pipe.

The temperature of the hose assembly is then elevated to a first temperature range to initiate or facilitate cross-linking of the resin. In one version, a heated pressurized medium is introduced into the hose assembly to elevate the temperature. Once the exothermic cross-linking reaction has been observed or monitored, the temperature of the hose assembly is elevated to a

second temperature range. While there may be some overlap between the first and second temperature ranges, the second temperature range is generally higher than the first temperature range. The hose assembly is maintained within the second temperature range for a selected time to allow the resin to cure at the inner surface of the pipe. The hose assembly **10** is maintained at such temperature and pressure levels during the resin curing stage so that the flexible liner **20** is pressed tight against the inner surface **42** of the pipe **40.** Even though the flexible liner **20** and resin may not adhere to the inner surface **42,** the cured resin and flexible liner form a sufficiently hard and water impermeable barrier thereby lining the pipe **40.** Once the selected time has transpired, the heated pressure medium is evacuated from the hose assembly.

A hose assembly **10** is prepared by selecting a resin impregnated flexible liner **20** of appropriate length and diameter. The flexible liner **20** may comprise any fabric known in the industry such as, but not limited to, polyester felt, fiber fleece or natural or synthetic materials, or any combination thereof, for example as described in United States Patents Numbered 4,714,095, 4,770,562, 5,029,615, 5,609,439, 6,270,289 and 6,227,764. In one version, the hose assembly **10** comprises the flexible liner **20**. In another version, the hose assembly **10** comprises the flexible liner **20** and a calibration hose **30** placed within the flexible liner **20** in a generally concentric or coaxial arrangement. Using existing methodologies and operations, such as but not limited to, direct inversion or pulled-in-place technologies, the hose assembly **10** is inserted into a segment of a pipe **40**. In one version, the pulled-in-place

methodology employs a flexible liner **20** and a calibration hose **30,** whereas the direct inversion technique employs only a flexible liner **20**. The particular methodology chosen for the disclosed process depends primarily on the site specific rigors of the particular installation. These methodologies are generally known to the artisan, and discussions of these methodologies and operations are not detailed here.

As shown in Fig. 1, the hose assembly **10** will generally extend through the segment of pipe **40** from about a first access point **50** to about a second access point **60**. The first end **12** and a second end **14** of the hose assembly **10** are located respectively in proximity to the first and second access points **50, 60** when the hose assembly **10** is in the pipe **40**.

A first manifold **70**, specifically the lower portion **74**, (Figs. 2A, 2B, 3A and 3B), is attached to the first end **12** of the hose assembly **10**. In one version, the first manifold **70** is attached to the first end **12** of the hose assembly **10** before the hose assembly **10** is extended through the pipe **40**. In another version, the first manifold **70** is attached to the first end **12** of the hose assembly **10** after the hose assembly **10** is extended through the pipe **40.**

The first manifold **70** is removably secured to the hose assembly **10** by inserting the lower portion **74** into the first end **12** and binding the hose assembly **10** around the tapered barrel **90** of the first manifold **70**. The opening **80** is inserted into the first end **12** leaving the connector portion **82** outside the hose assembly **10**. The hose assembly **10** may be secured around the tapered barrel **90** using a banding clamp **92**, a strap, an elastic band, tape, or any other

generally circular or closed configuration, or any combination thereof, having a circumference that can be tightened around the hose assembly **10** and the tapered barrel **90**.

The hose assembly **10** is extended longitudinally through the segment of pipeline **40**. In one version, the hose assembly **10** is rolled or everted through the pipeline **40**. In one version, air or gas may be introduced into the hose assembly **10** through the first manifold **70** to extend the hose assembly **10** through the pipe **40**. In yet another version, the air or gas being introduced into the hose assembly **10** is cooled.

After the hose assembly **10** is extended through the pipe **40**, a second manifold **170** is removably secured to the second end **14**. In one version, once the hose assembly **10** is extended through the pipe **40**, the air or gas being introduced into the hose assembly **10** is stopped and the gas or air in the hose assembly **10** is released and a second manifold **170** is attached to the second end **14**. The second manifold **170** is removably secured to the second end **14** in substantially the same manner as the lower portion **74** is removably attached to the first end **12** by inserting the tapered barrel **210** into the second end **14** and securing the hose assembly **10** thereto. When the first and second manifolds **70**, **170** are respectively attached to the first and second ends **12**, **14**, the hose assembly **10** becomes substantially an air-tight pressure vessel capable of selectively receiving, containing and releasing the heated pressurized medium, gas or air.

A pressurized medium is then injected or introduced into the hose assembly **10** to expand the hose assembly **10** against the inner surface of the pipe **42**. In one version comprising the flexible liner **20**, the hose assembly **10** is expanded by increasing the volume of the pressurized medium within the flexible liner **20** until the exterior surface **22** of the flexible liner **20** comes into contact with the interior surface **42** of the pipe **40**. In one version using a calibration hose **30**, the calibration hose **30** is expanded as the volume of the pressure medium or gas increases within the calibration hose **30**. As the calibration hose **30** expands it presses the exterior surface **22** of the flexible liner **20** against the inner surface **42** of the pipe **40.**

In one version, the pressurized medium comprises a liquid. In another version, the pressurized medium is a gas. In one version the pressurized medium is heated. In another version, the pressurized medium is steam. In yet another version, the pressurized medium is air. In one version, two sources of pressurized medium are used. In one version steam and air are used and can be mixed in selected percentages before being introduced into the hose assembly **10**.

In one version, a collection tube **230** is inserted into the hose assembly **10** so that the collection tube **230** extends from a selected point where liquid may accumulate within the hose assembly **10** to the second manifold **170**. The collection tube **230** comprises any commercially available tubing material suitable for carrying a liquid that will withstand the temperature and pressure ranges described herein. In one version, the collection tube **230** is a perforated

tube. In another version, the collection tube **230** comprises a plastic material, such as for example, polypropylene, urethane, or polyvinyl. In another version, the collection tube **230** comprises a natural or synthetic rubber tube. In another version, the collection tube **230** comprises a metal tube. In yet another version, the collection tube **230** comprises a fabric or cloth hose.

A plurality of thermocouples **290** capable of measuring and transmitting temperature readings are removably affixed to selected locations on the inner surface **42** of the segment of pipe **40**. In one version, the thermocouples are attached to the exterior surface **22** of the flexible liner **20**. The thermocouples may be affixed to the inner surface **42** or the exterior surface **22** using an adhesive or other suitable fastening means. In one version, four thermocouples are removably secured in the pipe **40** in proximity to the first and second access points **50**, **60** two at each end. The thermocouples **290** are operatively connected to a device to display the temperature at the selected locations on the inner surface **42** of the segment of pipe **40**. The thermocouples **290** allow for monitoring the temperature at the interface of the exterior surface **22** of the flexible liner **20** and the inner surface **42** of the pipe **40**. In one version, the first and second control stations **130, 160** may comprise means for displaying the temperature readings from the thermocouples **290**. In one version, monitoring the temperature allows for the heated pressurized medium to be maintained within the hose assembly **10** for the shortest time necessary first to initiate the cross-linking reaction of the resin, and second to cure the resin.

The temperature within the hose assembly **10** is elevated to a first temperature range to initiate cross-linking of the resin. In one version, the heated pressurized medium is introduced from the first source **110**, through the first manifold **70**, into the hose assembly **10**. In another version, the air or gas may be evacuated through a second control station **160** while the heated pressurized medium is being introduced into the hose assembly **10** from the first control station **130**. The first temperature range must be sufficiently high to initiate the resin cross-linking reaction. In one version, the first temperature range is at least about 110 degrees Fahrenheit but not more than about 200 degrees Fahrenheit. The temperature at which the cross-linking occurs depends on the type of resin being used, specifically the kind and concentration of isocyonate in the resin.

By selectively controlling the volume or flow rate of heated pressurized medium being introduced into the hose assembly **10**, the maximum amount of pressure, as recommended by the manufacturer, exerted radially on the flexible liner **20** can be achieved. The pressure limitations vary depending on the length and diameter of the pipe **40** being rehabilitated and the thickness or composition of the flexible liner **20**. The various manufacturers of flexible liners **20** provide instructions or guidelines relating to the amount of pressure or temperature that may be executed on the flexible liner **20** before the resin cures. If too much pressure is applied, the flexible liner **20** will stretch to the extent that its structural integrity may be adversely affected.

Generally, the thickness of the hose assembly **10** increases as the diameter of the pipe **40** increases. As the thickness of the hose assembly **10** increases, it becomes more important to monitor the first temperature range; in particular, it is important not to overheat the hose assembly **10.** Applications involving larger diameter pipes **40** and, therefore, relatively thicker hose assemblies **10**, will have relatively lower or cooler first temperature range than applications involving smaller diameter pipes **40** and correspondingly less thick hose assemblies **10**.

The term cross-linking means the chemical reaction of basic molecules into a network of connected molecules. The final properties of the resin depend on the degree of cross-linking. A cured resin having a large number linking points will be much harder than a cured resin having a small number of linking points. The cross-linking occurs by adding a small monomer molecule such as styrene. The monomer provides the link between the polymer chains.

The first temperature range is maintained until the exothermic cross-linking reaction is observed. The volume of gas within the hose assembly **10** is selectively adjusted to ensure that the temperature within the hose assembly **10** does not substantially or materially exceed the first temperature range. The exact time to maintain the hose assembly **10** within the first temperature range depends on several factors, including without limitation, the type of resin, the diameter of the pipeline, the length of the pipeline being repaired or rehabilitated, the thickness of the flexible liner **20**, and the ambient temperature and pressure at or within the pipe **40**. The thermocouples **290** are

monitored to determine when the cross-linking has initiated. Because the cross-linking process is exothermic, the thermocouples **290** will register a measurable temperature increase when the cross-linking reaction occurs, which in one version, will be observed at the first or second control stations **130**, **160**.

If the resin gets too hot before cross-linking occurs, one or more components of the resin will start to boil thereby deteriorating the resin, weakening the resulting hardened hose assembly **10**, or causing the resin to cure improperly. If the flexible liner **20** is over heated it may blister or also bubble thereby decreasing its strength and reducing the effectiveness of the relining process.

After the cross-linking is completed, the temperature within the hose assembly **10** is increased to a second temperature range to facilitate or expedite the resin curing process. Although some overlap may exist between the first and second temperature ranges, the upper end of second temperature range is generally higher than the upper end of the first temperature range because the cross-linking reaction removes the risk of damaging the resin of the flexible liner **20** of the hose assembly **10**. In one version, the heated pressure medium is introduced into the hose assembly **10** to elevate the temperature to a second temperature range. The increased volume of the heated pressure medium also increases the pressure within the hose assembly **10** up to a maximum of about 15 pounds per square inch. In one version, the temperature within the hose assembly **10** is elevated to the second temperature

range by decreasing or stopping the volume of the air or gas leaving the hose assembly at the second control station **160**. In another version, the temperature is elevated to the second temperature range by increasing the volume of heated pressurized medium being introduced through the first manifold **70**, allowing the air or gas to exit the hose assembly **10** from the second manifold **170** until the heated pressure medium starts to exit the hose assembly **10** from the second manifold **170,** and then closing the second control station **160**.

In one version, the introduction of the pressurized medium is continued throughout the two heating stages to promote or facilitate the movement of the medium from the first end **12** to the second end **14** of the hose assembly **10,** to prevent boiling of components in the resin, to prevent blistering of the flexible liner **20,** and to equalize or normalize the heat gradient throughout the hose assembly **10**.

The lowest temperature of the second temperature range must be sufficient to quicken the resin curing. The highest temperature of the second temperature range is not more than about 300 degrees Fahrenheit. In one version, the lowest temperature of the second temperature range is at least 150 degrees Fahrenheit. In another version, the lowest temperature of the second temperature range is at least 200 degrees Fahrenheit, and the highest temperature of the second temperature ranges is not more than about 260 degrees Fahrenheit.

The temperature within the hose assembly **10** is monitored using the

thermocouples **290**. In one version, the thermocouple displaying the lowest temperature reading is used to determine the time necessary to maintain the hose assembly **10** within the second temperature range. Referring to Chart 1, Curve 1 represents the minimum time for which the second temperature range must be maintained. In general, the lower the measured temperature at the thermocouple **290** recording the coolest temperature, the longer the temperature must be maintained at that lowest measured temperature. Curve 2 represents relationships of temperature and time analogous to those of Curve 1, but the times to be maintained for a given measured temperature are twice the times shown in Curve 1. In one version, the hose assembly **10** is maintained within the second temperature range until the thermocouple showing the lowest temperature is maintained for the corresponding time as shown in Curve 1 of Chart 1. In yet another version, the hose assembly **10** is maintained at the second temperature range until the thermocouple showing the lowest temperature is maintained for the corresponding time as shown in Curve 2 of Chart 1.

The curing times disclosed in Chart 1 are representative of times that will ensure that the resin has cured. The curing time depends on the temperature and pressure achieved at the interface of the hose assembly **10** and the pipe **40.** Higher temperatures, and thus quicker curing times, may be achieved under different conditions without departing from the scope of the disclosed invention.

CHART 1.

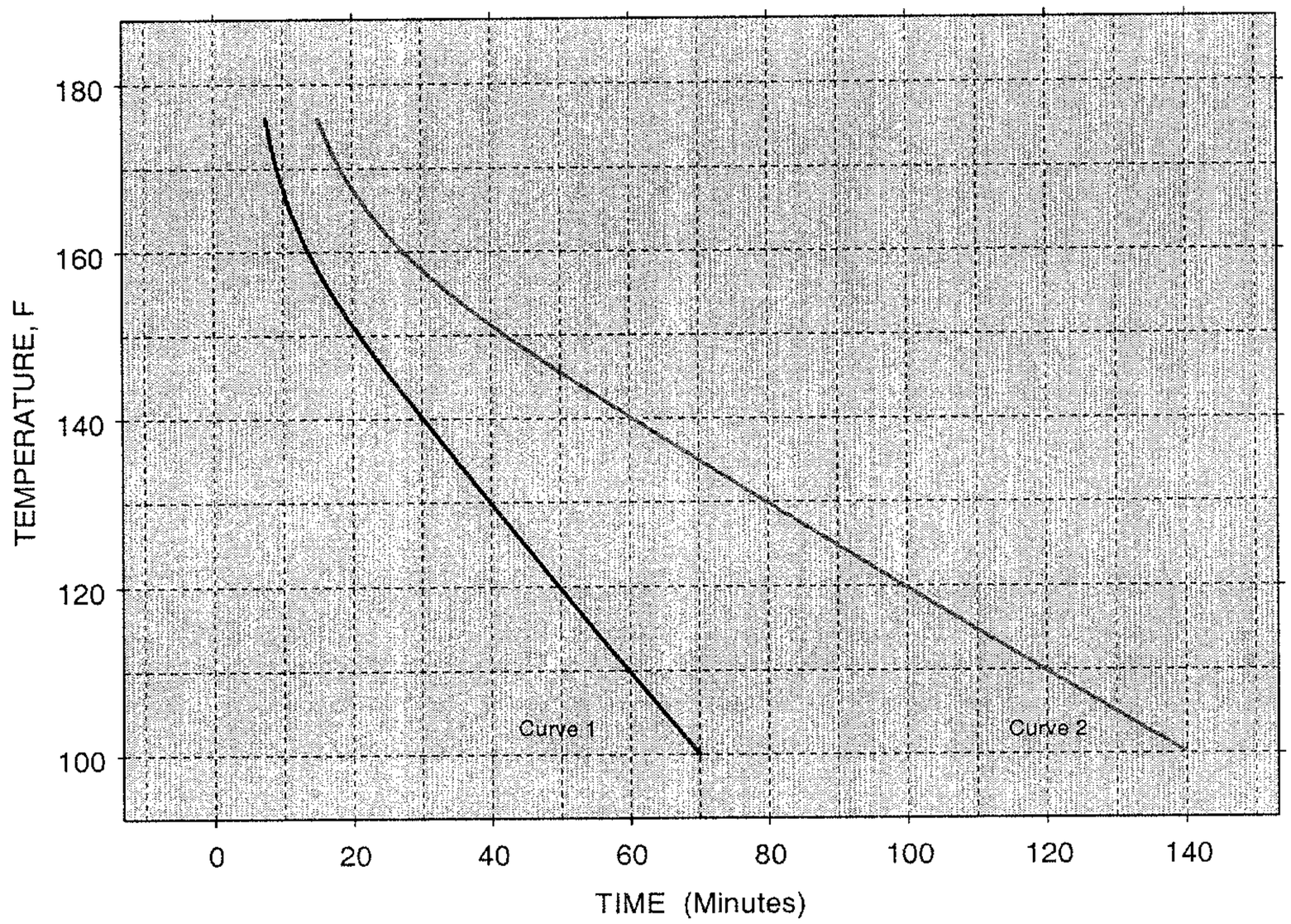

The disclosed invention will work with various types of resins, including without limitation, polyester, vinyl ester and epoxy. In one version, isophthalic polyester resin is used. In another version, vinyl ester resins are used. In yet another variation, epoxy resins may be used. The resin may be styrenated or non-styrenated. Examples of resins used include without limitation Reichhold Polylite® 33420, (a thixotropic isophthalic polyester resin), Interplastic Corporation's COR 72-AA-455 (an unsaturated polyester resin) and Ashland Chemicals' Aropol MR 12018 (unsaturated polyester orthophthalic resin).

Once the resin has cured, the hose assembly is cooled. In one version, the hose assembly **10** is air cooled. In another version, the heated pressurized medium is exhausted through the second manifold **170**. In yet another version, the air or gas is introduced into the hose assembly **10**. In yet another version, the air or gas is chilled or cooled before being introduced to cool the hose assembly **10**. In one version, the hose assembly **10** is cooled until the temperature reading at all the thermocouples **290** is less than about 100 degrees Fahrenheit.

The foregoing described process may be practiced using the following described apparatus.

A first control station **130** is provided. The first control station **130** comprises a first source **110** of heated pressurized medium, a second source **120** of gas, a first control value **112,** and a chiller **140**. The first control station **130** is operatively connected to the first manifold **70** by way of the first or second hoses or lines **102, 104**, **or** any combination thereof.

The first source **110** provides the heated pressurized medium of varying temperature. In one version, the first source **110** comprises a steam generator. In another version, the first source **110** comprises a hot water boiler. In one version, a first hose or line **102** operatively connects the first source **110** to the first manifold.

The second source **120** provides the air or gas into the first manifold **70**. In one version, the second source **120** is an air compressor. In another version, the second source **120** is a reservoir suitable for containing and

selectively releasing a gas. In another version, the second source **120** is provided with a chiller **140** located operatively on the discharge end of the second source **120** to provide cooled gas or air into the hose assembly **10**. A second hose or line **104** operatively connects the second source **120** and the first manifold **70.**

In one version, the first source **110** and the second source **120** are located on a truck or a trailer. In another version, the first and second source **110, 120** are operatively connected to the first manifold **70** with separate hoses or lines **102, 104**. In yet another version, the same line or hose **102** may be used to transfer the heated pressurized medium and the air or gas from the first and second sources **110, 120** to the first manifold **70.** A first control valve **112** regulates the volume of heated pressurized medium and gas or air to adjust the temperature as needed. The control valve **112** may be operatively positioned at the first control station **130**, along the hoses **102**, **104** or at the first manifold **70**.

Referring to Figs. 2A and 2B, 3A and 3B, the first manifold **70** comprises an upper portion **72** and a lower portion **74.** The upper portion **72** comprises one or more ports **100**. The ports **100** will be suitable for removably affixing one or more hoses or lines **102, 104** extending from the first source **110**. The upper portion **72** and the lower portion **74** each comprise a connector portion **82** and are releasably attached to each other. The connector portions comprise screw-type threads, screws, bolts, hooks, fasteners, clasps, or any combination thereof. In one version, the connector

portion **82** comprises a male half of a male-female connector that is inserted into the upper portion **72,** wherein, the upper portion **72** and the lower portion **74** comprise gaskets to provide an air-tight seal and are connected to each other using a quick-connect clamp system. In one version, various lengths of extension tubes **260, 270** (Figs. 7 and 8) may be removably and selectively positioned between the upper portion **72** and the lower portion **74** depending on depth of the pipe **40.**

A second control station **160** is provided in proximity to the second access point **60.** In one version, the second control station **160** is operatively connected to the second manifold **170**. The second control station **160** has a second control valve **162.** The second control valve **162** may be operatively positioned on the second manifold **170**, the evacuating conduit **190**, or anywhere on the second control station **160** to release selectively the heated pressure medium, gas or air from the hose assembly **10.** In one version, the second control valve **162** is positioned at the second control station **160** opposite to the end having the third port **250**.

Referring to Figs. 2B, 3B, 5A, 5B and 5C, the diameter of the first tapered barrel **90** and the second tapered barrel **210** changes, at least, one inch (1") in diameter for every twelve inches (12") in length. In another version, the diameter of the first and second tapered barrels **90, 210** changes at least one inch (1") in diameter for every six inches (6") in length. The diameter of the openings **80, 215** is selected depending on the diameter of the flexible liner **20** being used, which in turn depends on the diameter of the pipeline **40**. In

one version, the openings **80, 215** have a diameter of at least four inches. The diameter of the openings **80, 215** may be modified without departing from the scope of the specification or the accompanying claims.

FIG. 4 shows a fragmentary view of the second manifold **170** in the pipe **40**. The hose assembly **10** is securely bound around the second tapered barrel **210** of the second manifold **170** using a clamp **212.** In one version, the collection tube **230** is placed within the hose assembly **10** and is attached to the drain **180** to allow fluid collected in the collection tube **230** to flow through the drain **180**. In another embodiment, a drain hose **200** is attached on the downstream opening of the drain **180.** The evacuating conduit **190** is removably secured to the second port **220** and extends to the second control station **160** where it is removably secured to the third port **250.**

Referring to Figs. 5A, 5B and 5C, the second manifold **170** has a second tapered barrel **210,** a second clamp **212**, a second opening **215**, at least one second port **220**, and a drain **180**. The second manifold **170** is remobably secured to the second end **14** in a manner substantially the same as the first manifold **70** is secured to the first end **12.** The drain **180** may be selectively opened and closed to void the collection tube **230**.

Referring to Figs. 6 and 7, the extension tubes **260, 270** comprise a rigid material. In one embodiment the extension tubes **260, 270** comprise aluminum. In another version, the extension tubes **260, 270** comprise Rainway Model HPRL 1200. In another version, the extension tubes **260, 270** are of 37 11/16 inches in circumference and twelve inches (12") in diameter,

by desired length, by one-eighth inch (1/8") aluminum rolled to fit ends and welded. The length of the several sections of the extension tubes **260, 270** may vary. Several sections of extension tubes **260, 270** are capable of being releasably secured to one another in the same manner as the upper and lower portions **72** and **74** are secured to each other to form an extension tube of any desired length while allowing for disassembly. In another version, the extension tubes **260, 270** have an access relief **280**.

While specific embodiments of the disclosed invention have been shown and described for the purpose of illustration, the protection offered by any patent which may issue upon this application is not limited to the disclosed embodiments. Rather, the protection extends to all structures, arrangements and processes falling fairly within the scope of the claims appended hereto.

WHAT IS CLAIMED IS:

1. A process of lining a pipe, the process comprising the steps of:

a. isolating a segment of pipe requiring relining;

b. preparing a hose assembly, the hose assembly comprising a flexible liner impregnated within a resin;

c. introducing the hose assembly into the segment of pipe requiring relining;

d. expanding the hose assembly so that the hose assembly contacts an inner surface of the pipe by injecting a heated pressurized medium into the hose assembly;

e. elevating the temperature of the hose assembly to a first temperature range to allow for cross-linking the resin;

f. elevating the temperature of the hose assembly to a second temperature range;

g. maintaining the temperature of the hose assembly within the second temperature range for a selected time to allow curing of the resin; and

h. cooling the hose assembly.

2. The process of Claim 1, wherein the hose assembly further comprises a calibration hose, the calibration hose being placed within the flexible liner in a generally parallel position.

3. The process of Claim 1, before inserting the heated pressure medium, further comprising the step of removably attaching a plurality of

thermocouples to selected locations on the inner surface of the segment of pipe.

4. The process of Claim 1, wherein the medium comprises a liquid.

5. The process of Claim 1, wherein the medium comprises a gas.

6. The process of Claim 1, wherein the medium comprises steam.

7. The process of Claim 1, wherein the medium comprises air.

8. The process of Claim 1, wherein the volume of the medium is increased in the hose assembly to elevate the temperature to the first temperature range.

9. The process of Claim 1, wherein the volume of gas within the hose assembly is increased to elevate the temperature to the first temperature range.

10. The process of Claim 1, wherein the resin is selected from the group consisting of a polyester, a vinyl ester or an epoxy resin, and any combination thereof.

11. The process of Claim 1, whereas the resin is styrenated or non-styrenated.

12. The process of Claim 1, wherein the volume of the heated pressure medium is increased to elevate the temperature of the hose assembly to the second temperature range.

13. The process of Claim 1, wherein the first temperature range is from about 110 degrees Fahrenheit to about 200 degrees Fahrenheit.

14. The process of Claim 1, wherein the selected pressure range is about 15 pounds per square inch.

15. The process of Claim 1, wherein the highest temperature of the second temperature range is no greater than about 300 degrees Fahrenheit.

16. The process of Claim 1, wherein the lowest temperature of the second temperature range is at least about 150 degrees Fahrenheit.

17. The process of Claim 1, wherein the lowest temperature of the second temperature range is at least about 170 degrees Fahrenheit.

18. The process of Claim 1, wherein the lowest temperature of the second temperature range is at least about 190 degrees Fahrenheit.

19. The process of Claim 1, wherein the lowest temperature of the second temperature range is at least about 210 degrees Fahrenheit.

20. The process of Claim 1, wherein the hose assembly is maintained at the second temperature range for a selected time

21. The process of Claim 20, wherein the selected time is dependent upon a lowest temperature monitored at the plurality of thermocouples.

22. The process of Claim 20, wherein the selected time is greater than about five minutes.

23. The process of Claim 20, wherein the selected time is greater than about ten minutes.

24. The process of Claim 20, wherein the selected time is less than about one hundred and forty minutes.

25. The process of Claim 20, wherein the selected time is less than about seventy minutes.

26. The process of Claim 1, further comprising the step of monitoring the thermocouples while evacuating the heated pressure medium until all measure temperatures of less than about 100 degree Fahrenheit.

27. The process of Claim 1, further comprising the step of continuously introducing the heated pressure medium into the hose assembly while maintaining the hose assembly within the first and second temperature ranges.

28. The process of Claim 1, further comprising the step of inserting a collection tube into the flexible liner before the step of introducing the heated pressure medium to allow moisture to be collected and drained from the hose assembly.

29. A process of lining a pipe, the process comprising the steps of:

a. isolating a segment of a pipe requiring relining, the pipe having an inner surface;

b. preparing a hose assembly, the hose assembly comprising a flexible liner impregnated with a resin;

c. introducing the hose assembly into the segment of pipe requiring relining;

d. removably attaching a plurality of thermocouples to selected locations on the inner surface of the segment of pipe;

e. removably securing a first manifold to the first end of the hose assembly and removably securing a second manifold to the second end of the hose assembly;

f. expanding the hose assembly so that the flexible liner contacts the inner surface of the pipe by injecting a heated pressurized medium into the hose assembly;

g. elevating the temperature of the hose assembly to a first temperature range to allow for cross-linking the resin;

h. monitoring the thermocouples until the cross-linking reaction exotherms;

i. elevating the temperature of the hose assembly to a second temperature range;

j. maintaining the temperature of the hose assembly within the second temperature range for a selected time sufficient to allow for the curing of the resin; and

k. cooling the hose assembly.

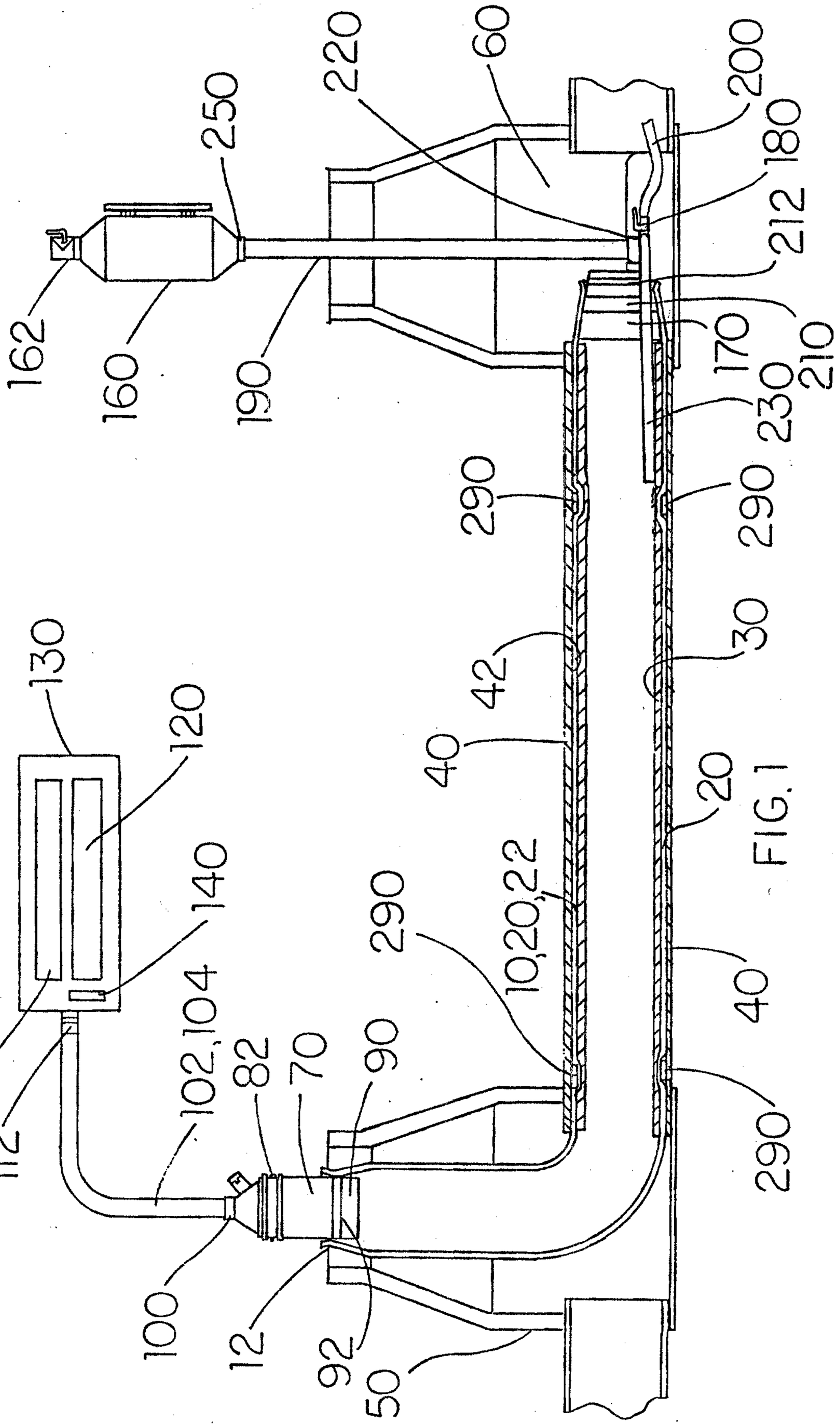
250
220
60
200
212
180
162
160
190
170
210
230
290
290
290
130
120
140
110
112
102,104
82
70
90
102,202
40
42
30
20
40
290
100
12
92
50

FIG. 1

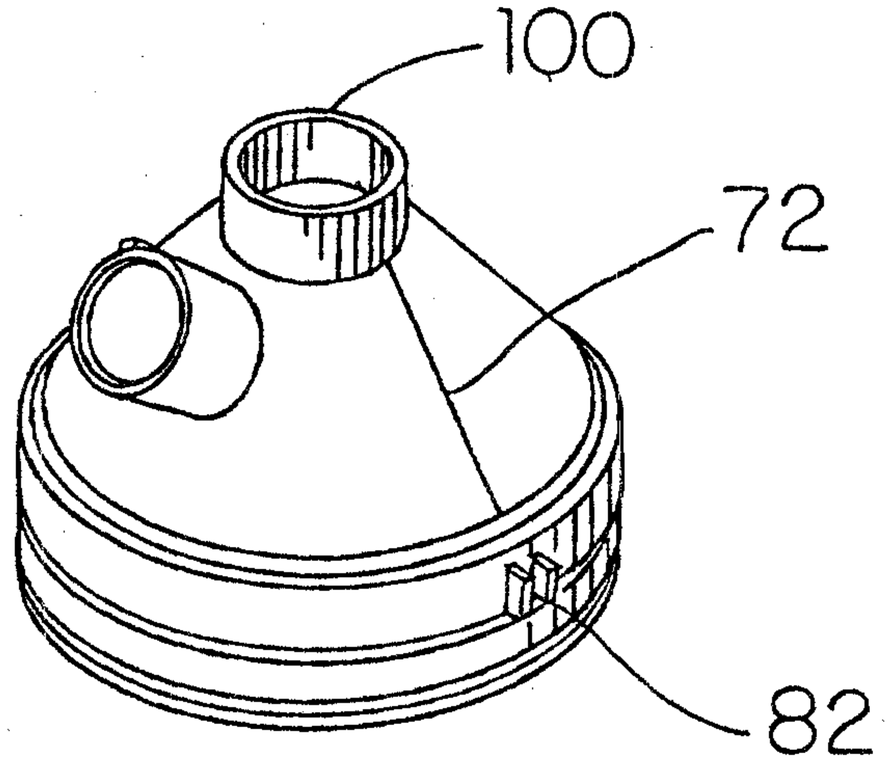

FIG.2A

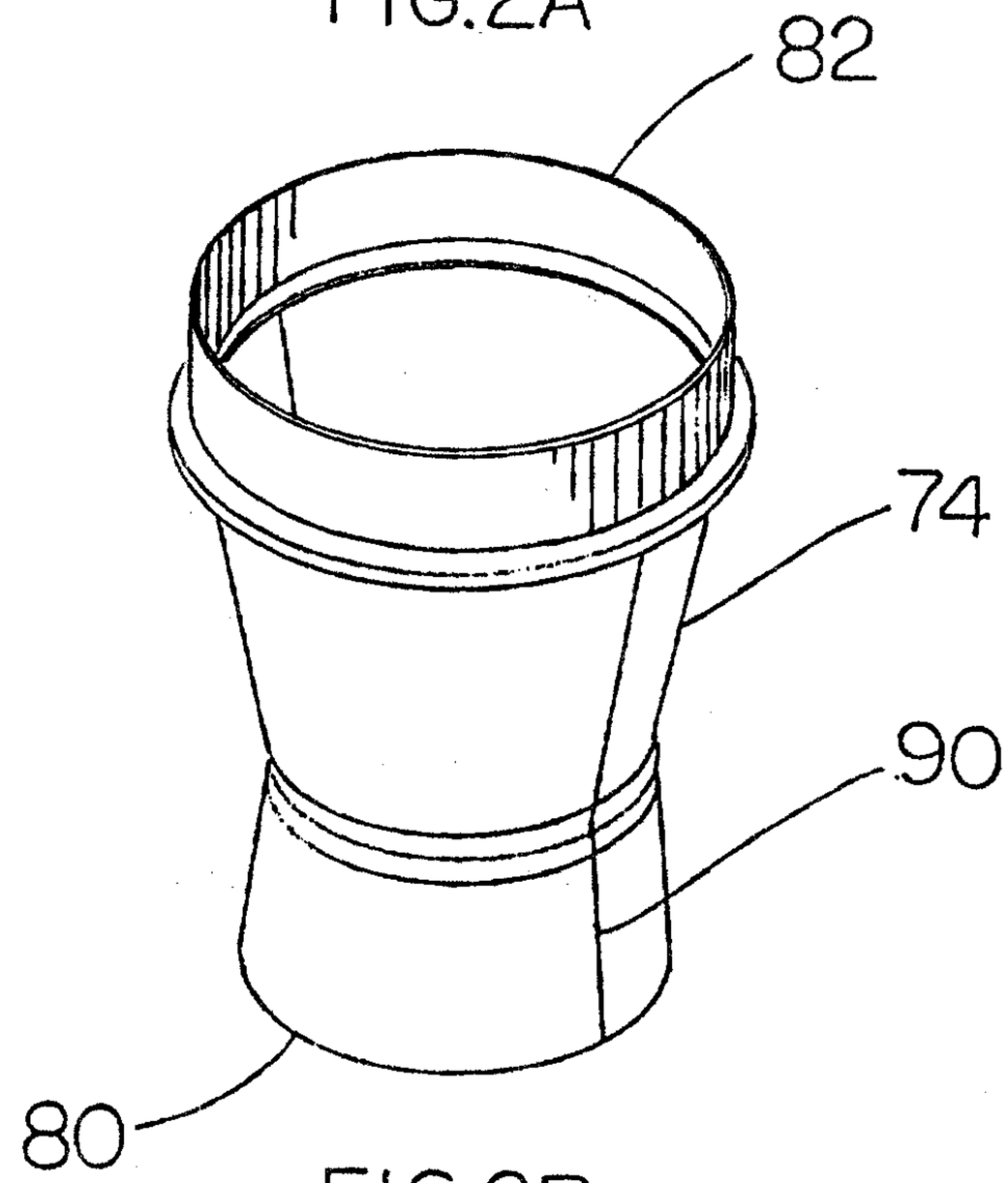

FIG.2B

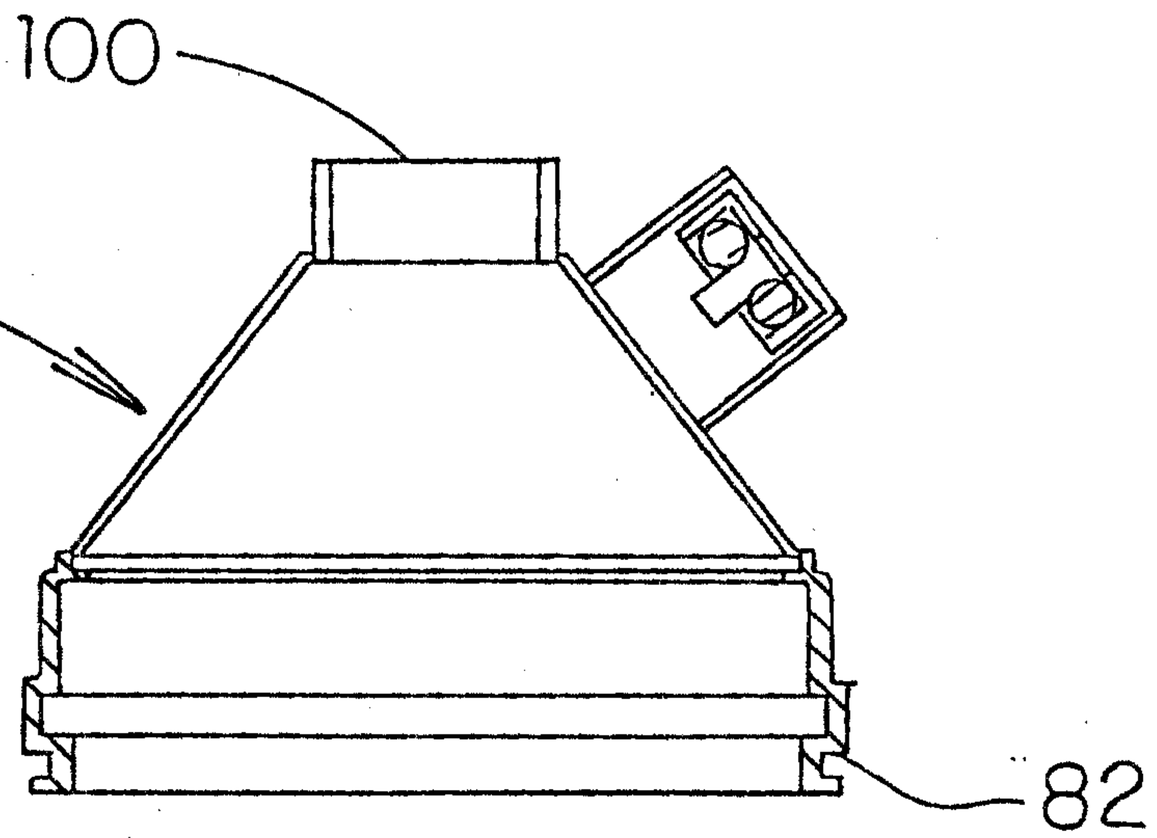

FIG.3A

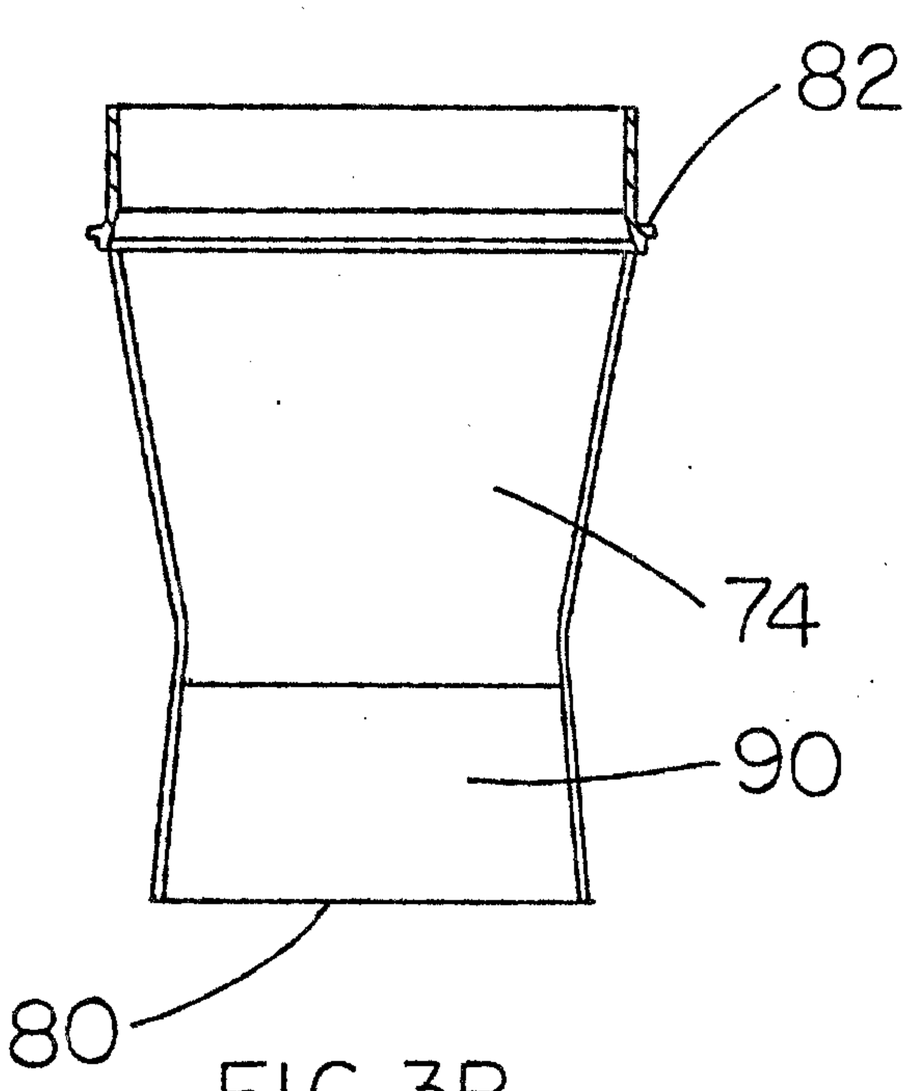

FIG.3B

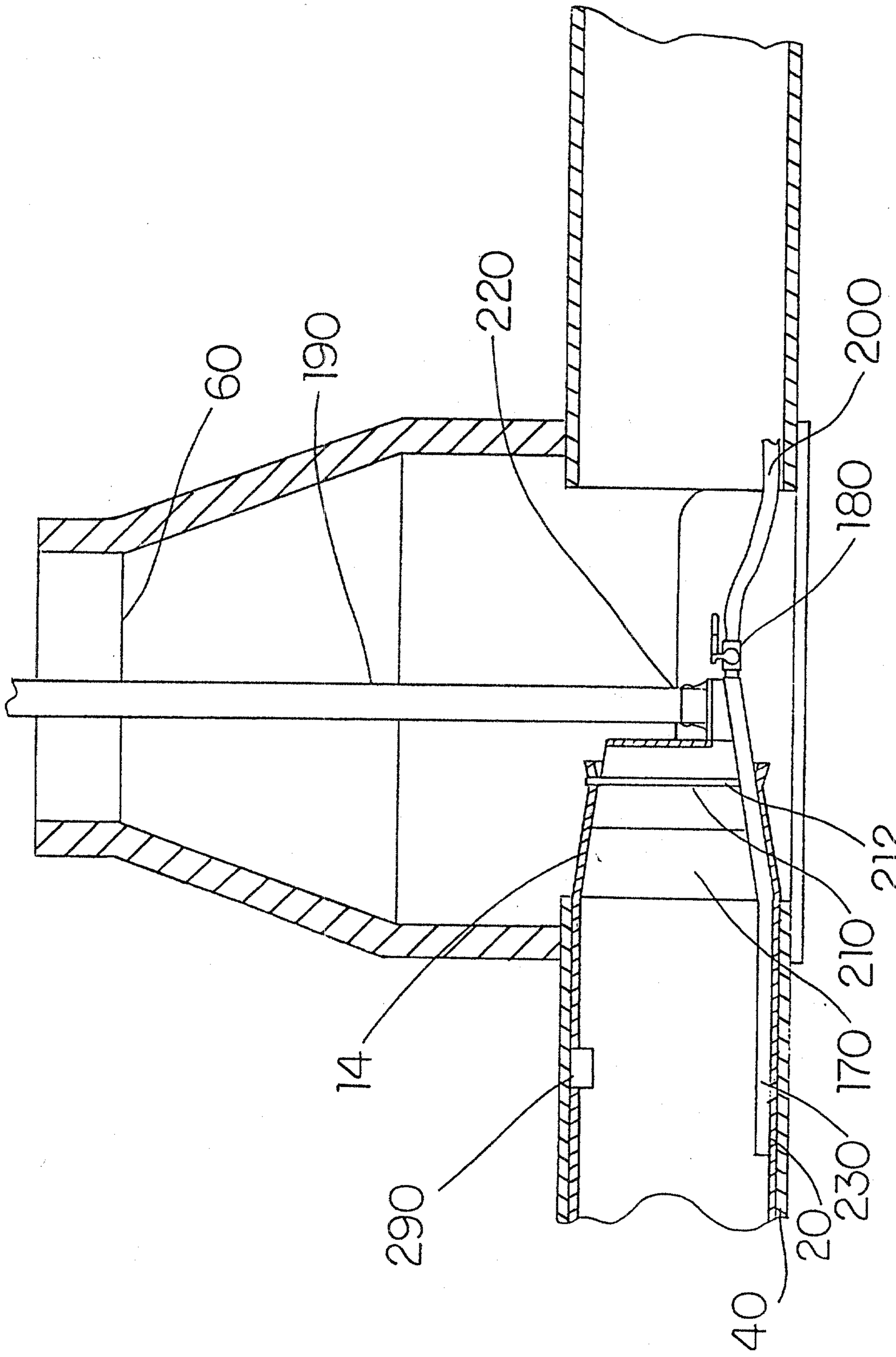

FIG. 4

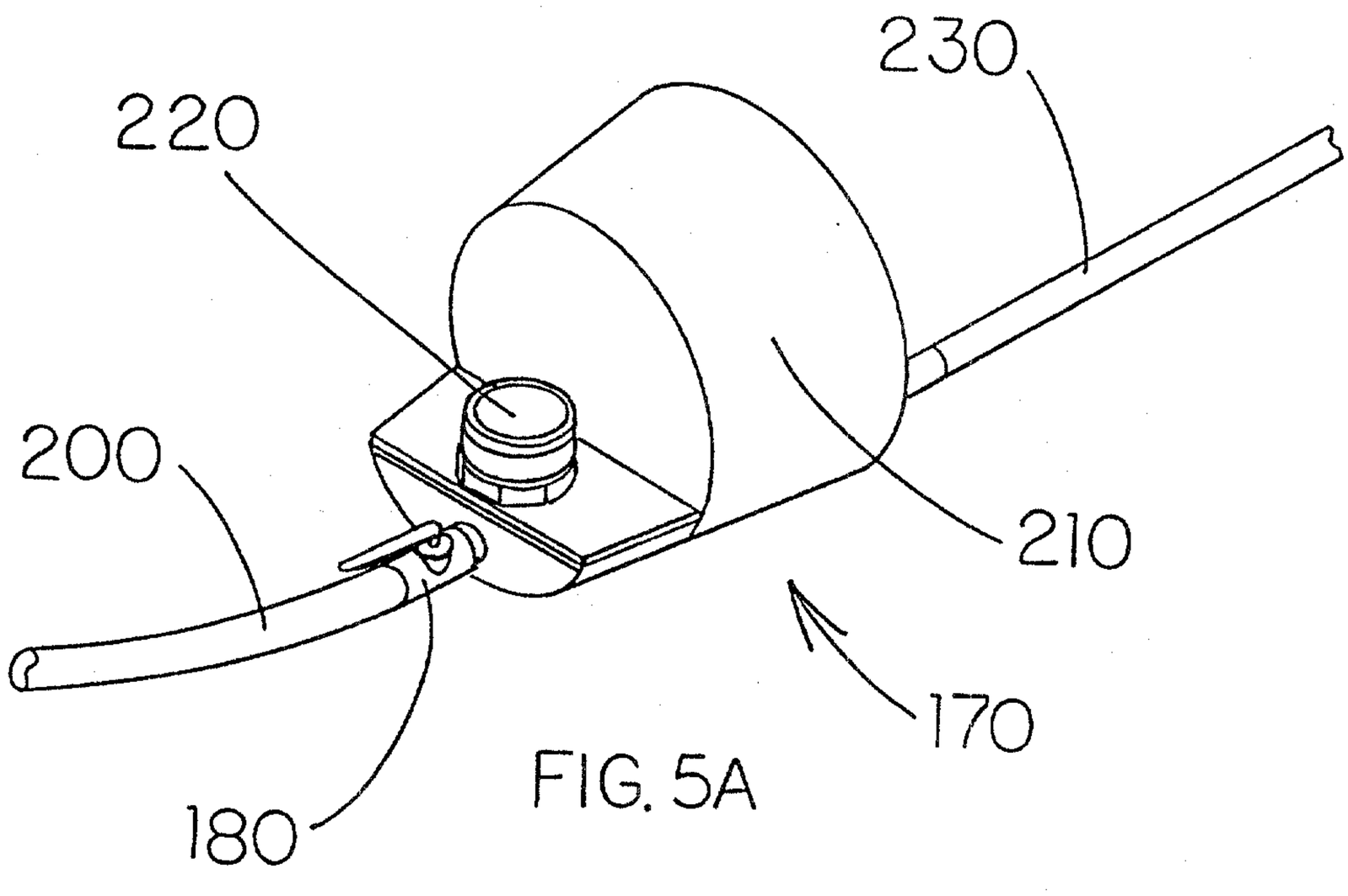

FIG. 5A

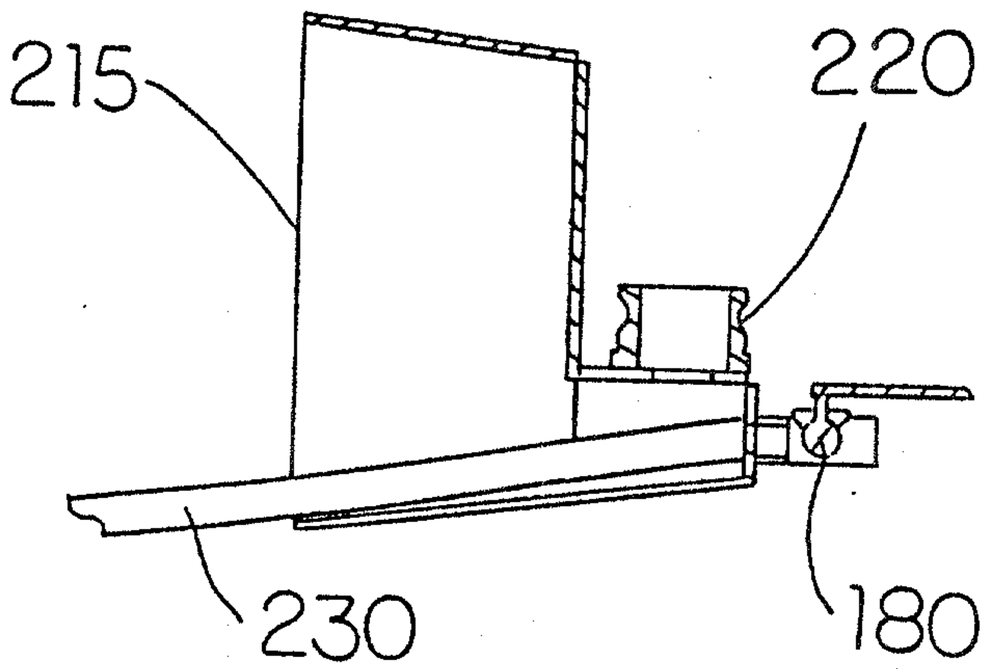

FIG. 5B

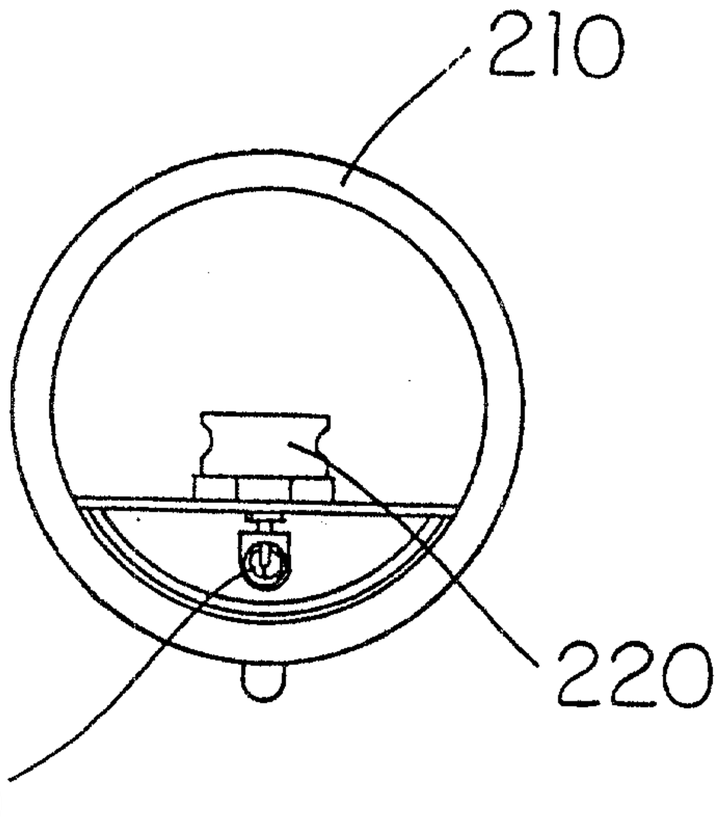

FIG. 5C

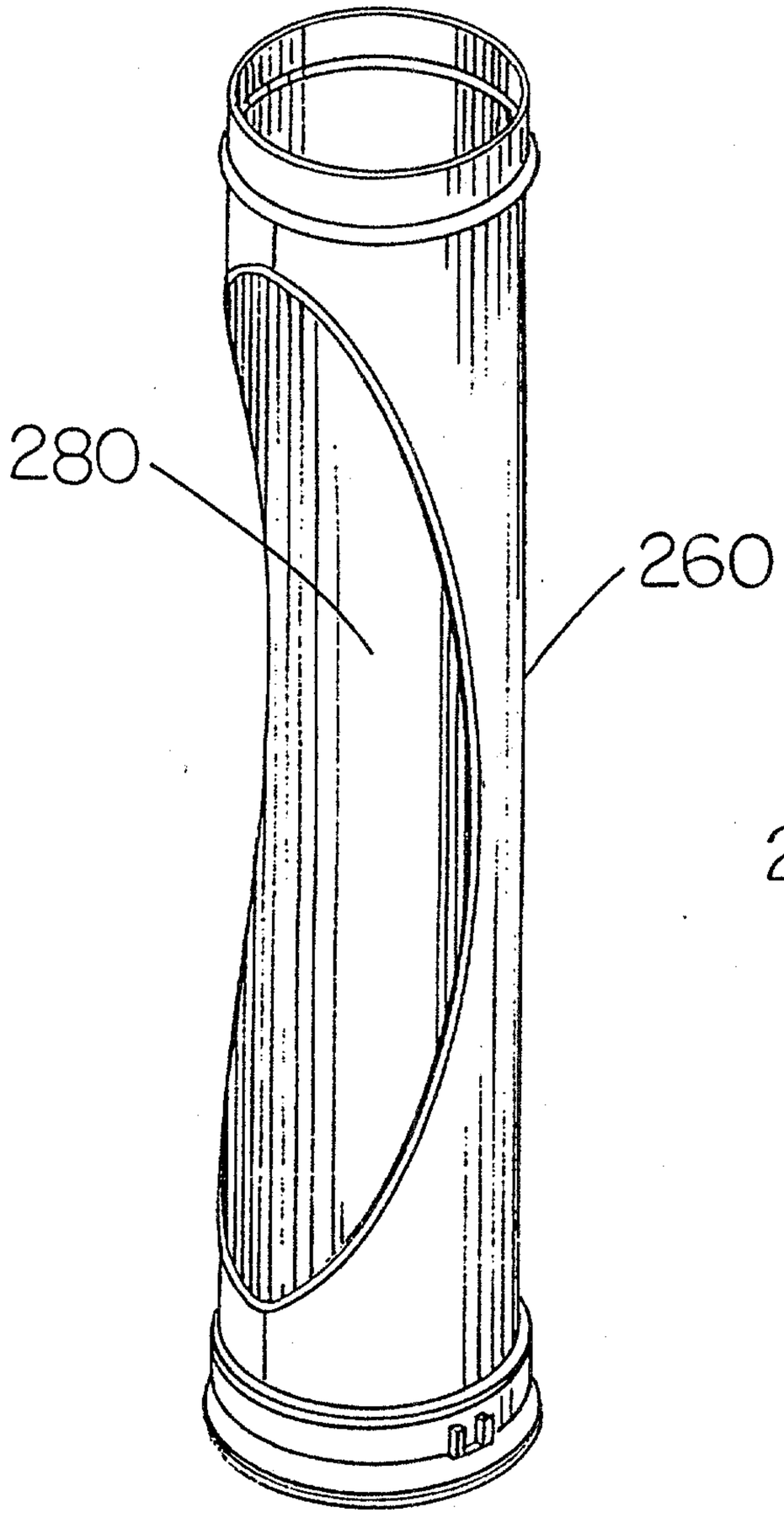

FIG 6.

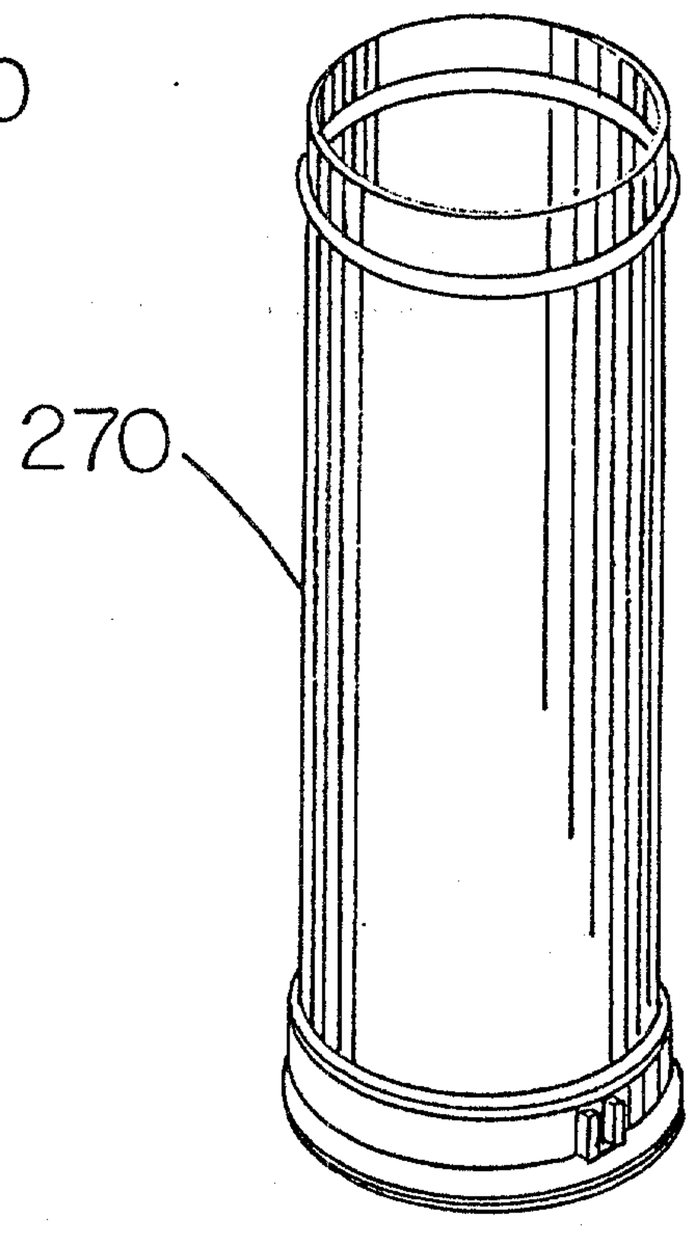

FIG. 7

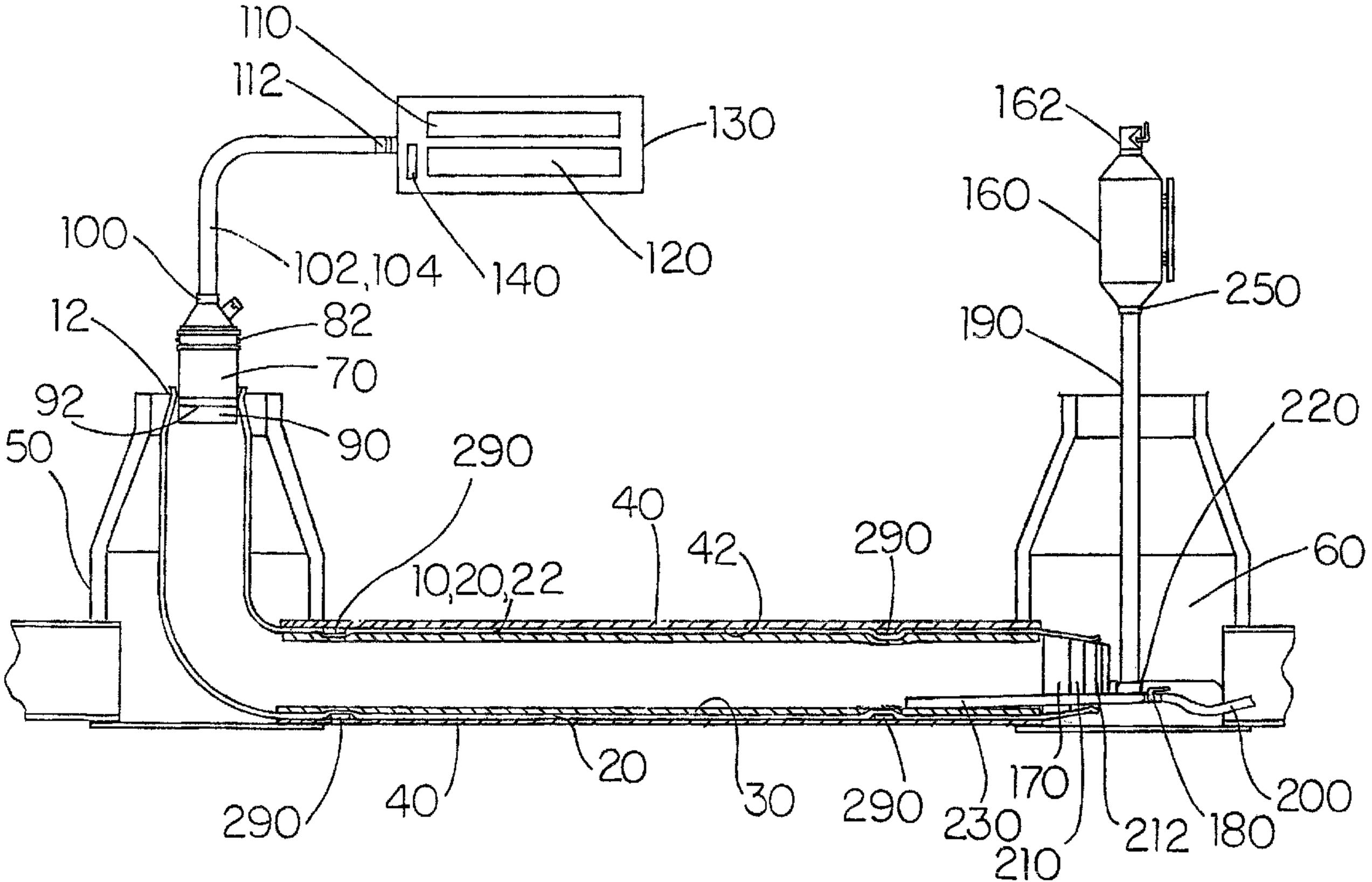
110
112
130
100
102,104
140
120
12
82
70
92
90
50
290
40
42
290
10,20,22
60
290
40
20
30
290
230
170
210
212
180
200
162
160
250
190
220