June 20, 1967 C. A. BILLINGHAM ETAL 3,326,604

TILTABLE BEAUTICIAN'S CHAIR

Filed Nov. 3, 1964 3 Sheets-Sheet 1

Fig. 1.

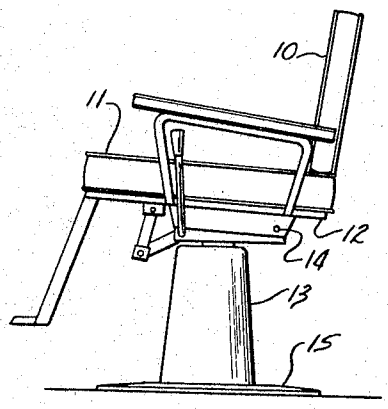

Fig. 2.

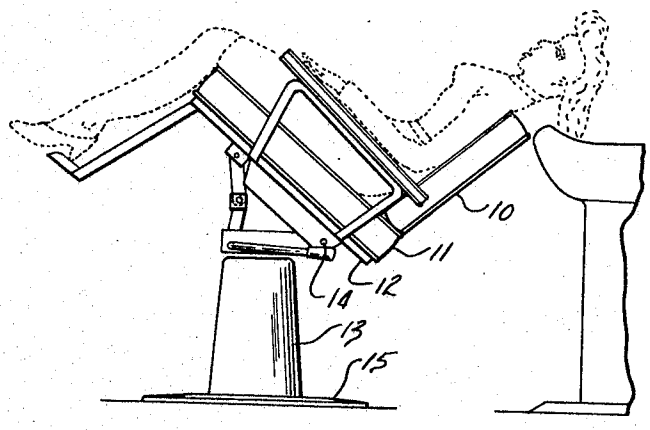

Fig. 3.

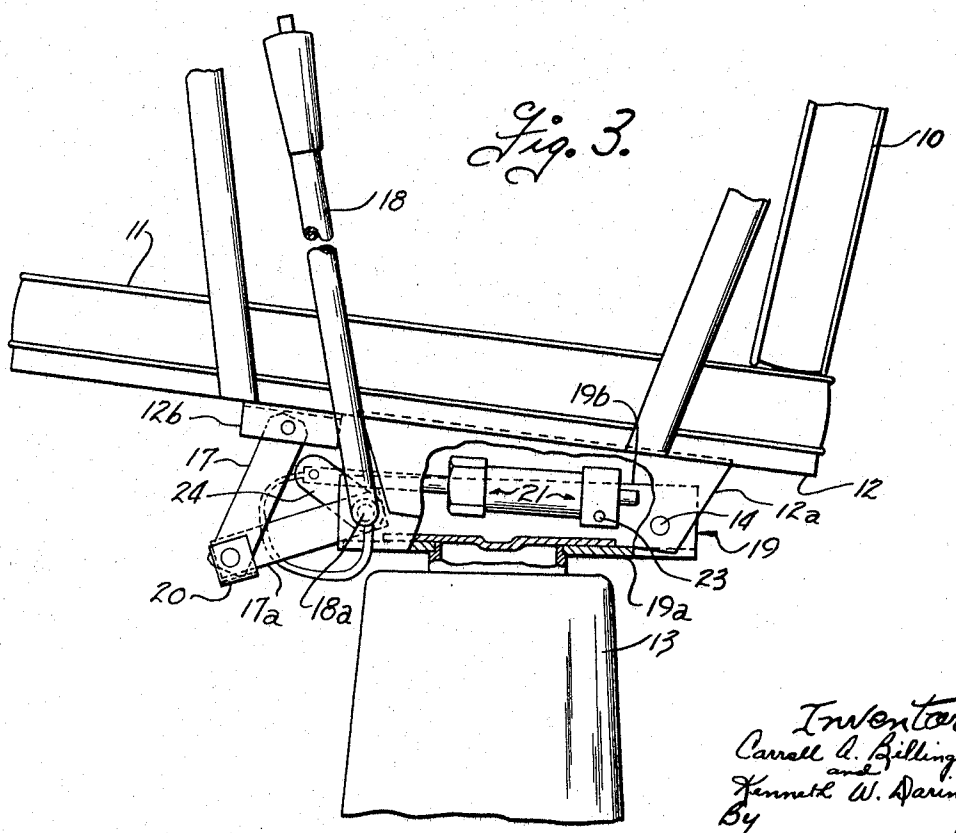

Inventors
Carroll A. Billingham
and
Kenneth W. Daring
By
McCanna, Morsbach & Pillote
Attorneys

June 20, 1967 C. A. BILLINGHAM ETAL 3,326,604

TILTABLE BEAUTICIAN'S CHAIR

Filed Nov. 3, 1964 3 Sheets-Sheet 2

Fig. 4.

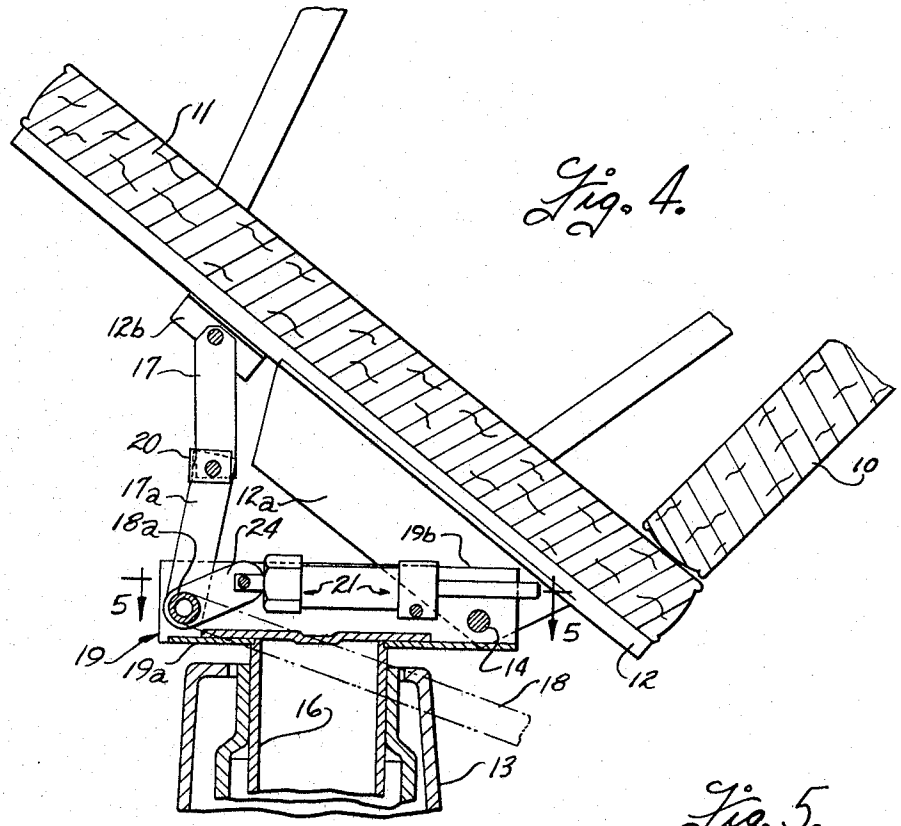

Fig. 5.

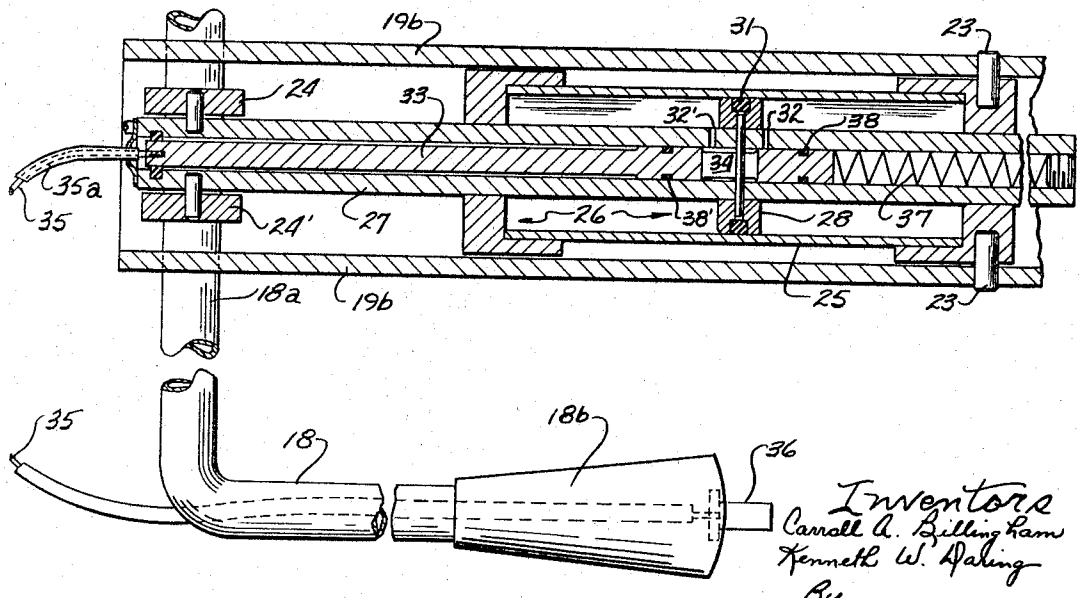

Inventors
Carroll A. Billingham
Kenneth W. Dahling
By
McCanna, Morsbach & Pillote
Attorneys

June 20, 1967 C. A. BILLINGHAM ETAL 3,326,604

TILTABLE BEAUTICIAN'S CHAIR

Filed Nov. 3, 1964 3 Sheets-Sheet 3

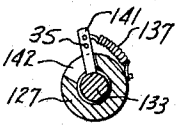

Fig. 6-A.

Fig. 6.

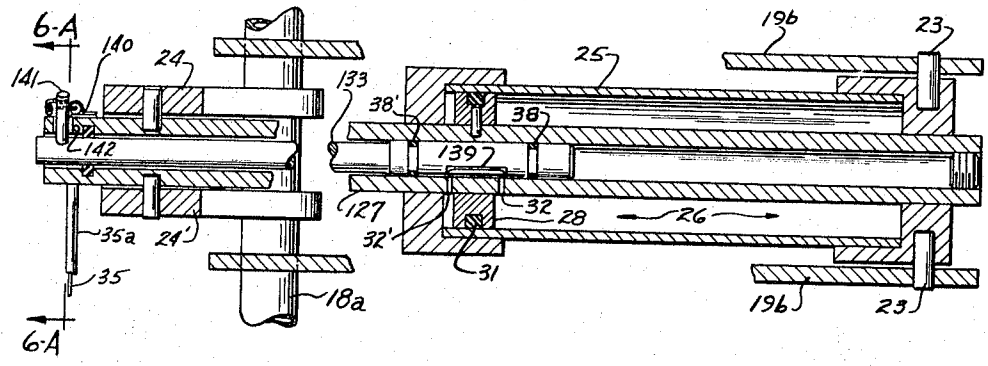

Fig. 7.

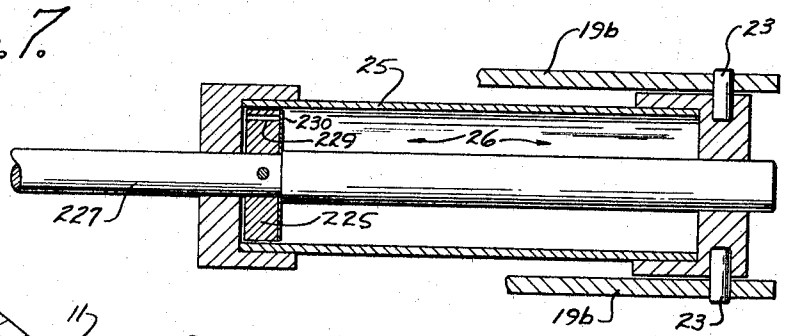

Fig. 8.

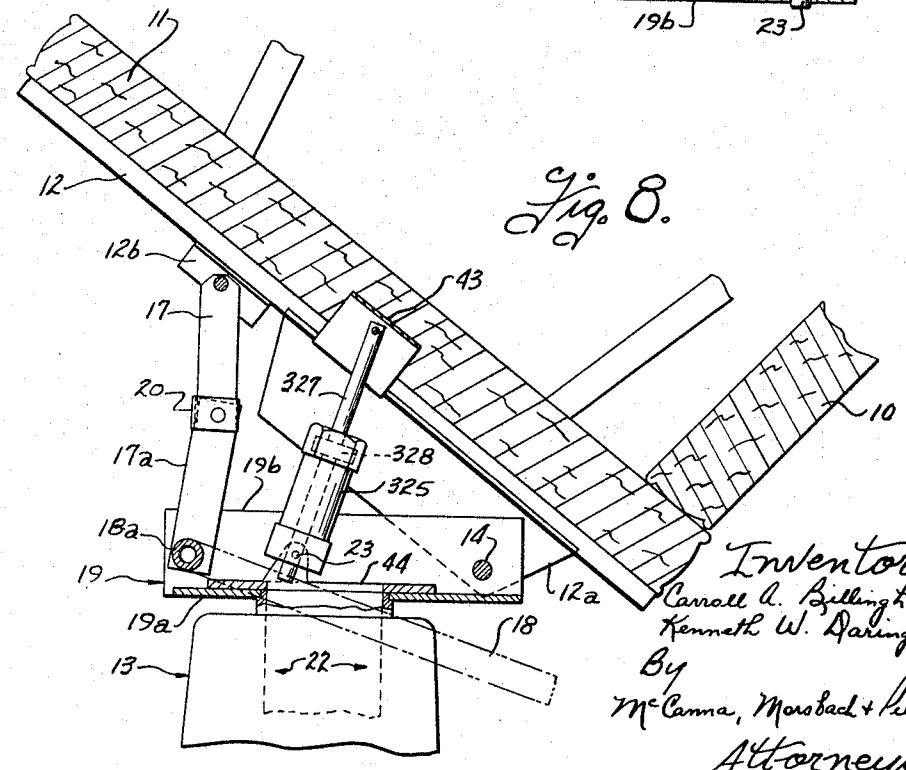

Inventors
Carroll A. Billingham
Kenneth W. Darling
By
McCanna, Morsbach & Pillote
Attorneys

United States Patent Office 3,326,604 Patented June 20, 1967

3,326,604

TILTABLE BEAUTICIAN'S CHAIR

Carroll A. Billingham, Rockford, and Kenneth W. Daring, Belvidere, Ill., assignors to Belvedere Products, Inc., Belvidere, Ill., a corporation of Illinois

Filed Nov. 3, 1964, Ser. No. 408,511
12 Claims. (Cl. 297—328)

This invention relates in general to a tiltable beautician's chair.

This invention is especially useful in beauty shops for tilting an occupant backward so that the occupant's head is positioned over a shampoo bowl. In the prior art, this positioning has been accomplished by dropping the back of the chair into a reclining position. This was objectionable since the occupant would slide down the back of the chair as the back was lowered. Such sliding happened because the lower torso of the occupant would stay in seated position while the back of the chair would pivot about a different point than the body of the occupant; the back of the chair usually pivoting at a point either behind or below the occupant. As a result of this sliding, the occupant had to change her position or be repositioned by the operator. Either procedure was uncomfortable and thus objectionable. The tendency to slide is overcome by tilting both the chair seat and back which are hereinafter sometimes referred to as "the occupant support." Doing this, however creates different objectionable features, for when the center of gravity of the occupant and occupant support moves past the pivot point, there is acceleration in the movement and a resulting falling feeling in the occupant which frightens her. The accelerated movement also stresses the stop mechanism which limits movement of the chair and results in an uncomfortable jolt or jar when the occupant support reaches its ultimate tilted position.

It is an object of this invention to provide a tiltable beautician's chair in which the movement is retarded or dampened so that there is little acceleration when the center of gravity of the occupant and occupant support moves past the pivot point and little or no jolt when the movement stops.

Another object of this invention is to provide an improved beautician's chair with a device for retarding or dampening tilting movement but which can be hydraulically locked in position at the extremities of movement or at any intermediate position as the operator desires, to facilitate her work. Thus, the invention allows the operator to raise the occupant a short distance above the shampoo bowl for the purpose of wrapping a towel around the occupant's hair or for a preliminary rubbing of the hair with a towel. This also allows the operator to tilt the chair backward a slight distance to compensate for varying heights of occupants and thus bring the occupant's head to the most comfortable height for the operator. This arrangement also assures that the occupant support will remain in position so that an occupant cannot force tilting by accident, for example, by jumping suddenly into the chair. Thus, the locking characteristic is a desirable safety feature.

Another object of this invention is to provide a beautician's chair having manually operable mechanism for tilting the occupant support and in which rearward tilting of the occupant support is limited to a slow rate sufficient to avoid apprehension of falling by the occupant and wherein return movement of the occupant support to an upright position can be effected at a relatively more rapid rate.

These, and other objects and advantages of the invention will be more readily apparent by reference to the following detailed description and the accompanying drawings wherein:

FIGURE 1 is a side view of the chair with the occupant support in upright position and mounted on a base;

FIG. 2 is similar to FIG. 1 but with the occupant support in a tilted position;

FIG. 3 is a fragmentary side view of the occupant support and base illustrating the tilting mechanism and pivotal axis and with parts broken away to illustrate the device for dampening or retarding movement of the occupant support;

FIG. 4 is a fragmentary section along the centerline of the chair to illustrate the relative positions of the elements when in tilted position;

FIG. 5 is a sectional view along plane 5—5 of FIG. 4, of the device for dampening movement on a larger scale than FIG. 4 and illustrating the handle with the switch mechanism for engaging the device to allow movement of the occupant support;

FIG. 6 is a sectional view similar to FIG. 5 showing a modified form of dampening device for the tiltable occupant support;

FIG. 6A is a sectional view along the plane 6A—6A of FIG. 6;

FIG. 7 is a sectional view showing a further modified form of dampening device for the tiltable occupant support; and

FIG. 8 is a centerline section similar to FIG. 4 and illustrating a modified arrangement for mounting the dampening device.

Referring further to the drawings, the chair includes a back **10** and seat **11** which are mounted on a frame **12** and which together comprise the tiltable portion of the chair. The tiltable portion of the chair hereinafter generally referred to as the "support" or "occupant support" is pivotally connected to a base **13** about a pin **14** defining a horizontal pivot axis. The base **13** may be various different types to provide stability and as shown has an outwardly extending toe portion **15** to provide necessary stability when the center of gravity of the support and occupant moves past the horizontal axis **14** and to maintain such stability when the chair is in final tiltable position as shown in FIG. 2. As illustrated in FIG. 4, the base **13** may contain an adjustable portion **16** which may be operable in a manner illustrated by U.S. Letters Patent No. 2,969,645 issued to W. J. Kiefer to raise and lower the occupant support.

A manually operable mechanism is provided for selectively tilting the occupant support about its pivot axis. As shown in FIGS. 3 and 4, the base **13** includes a support bracket **19** mounted on the upper end of the adjustable portion. The support bracket is conveniently in the form of an elongated channel member having a web portion **19***a* and upstanding leg portions **19***b*. The frame **12** has downwardly extending brackets **12***a* which are pivotally mounted on the leg portion **19***b* of the support bracket by the aforementioned pin **14**. In the embodiments illustrated, the support is tilted by a linkage **17** and **17***a* operated by a handle **18**. The handle is conveniently formed from a tube bent through a 90° angle as shown in FIG. 5 to provide a handle portion and a transversely extending shaft portion **18***a* which is rotatably supported in the leg portion **19***b* of the base support bracket. The link **17***a* is rigidly secured to the shaft portion **18***a* for movement with the handle and the link **17** is pivotally connected at opposite ends to the link **17***a* and to a bracket **12***b* on the frame **12**. The links are conveniently so proportioned as to extend approximately in line when the occupant support is in its rearmost position and an overcenter lock **20** is provided and arranged to engage the edges of the pivotally interconnected links when they move to an overcenter position to lock the occupant support in full tilted position as shown in FIG. 4.

The tilting movement of the occupant support is retarded or dampened by a device **21** which will hereinafter be more fully described. The dampening device **21** is preferably mounted in horizontal position as shown in FIGS. 3 and 4, and is swingably connected at one end to the base bracket **19** by means of pins **23** and operatively connected at the other end to the occupant support as through arms **24** and **24'** rigidly secured to the shaft portion **18***a* of the handle and linkage **17** and **17***a*. In this preferred mounting, the dampening or retarding device **21** is disposed within the channel member and nearly completely hidden from view, even when the occupant support is in full tilted position as illustrated in FIGS. 2 and 4. In addition, there is no interference with the seat **11** and this arrangement occupies a minimum vertical space.

Referring now to FIG. 5, a preferred design of the dampening or retarding device will be described. The dampening device comprises an enclosed hydraulic chamber conveniently in the form of a cylinder **25** containing a hydraulic fluid **26**. A movable wall or piston **28** is disposed in the cylinder and separates the same into compartments at opposite sides of the piston and a piston rod **27** is rigidly attached to the piston and slidably extends out of one end of the cylinder. Preferably, the piston rod also slidably extends out of the other end of the cylinder to maintain a constant volume in the cylinder. In this embodiment, an O-ring **31** is mounted on the piston to prevent flow of the hydraulic fluid from one side of the piston to the other along the cylinder wall and the dampening device has means for regulating the flow of fluid from one side of the piston to the other. In this means, the piston rod **27** is hollow and has holes **32** and **32'** on either side of the piston **28** to allow the fluid **26** to flow from one side of the piston into the hollow piston rod and back to the other side of the piston. Inside the hollow piston rod **27** is a valving arrangement for controlling this flow of fluid from one side of the piston to the other. The valving arrangement is in the form of a valve stem **33** fitted inside the piston rod **27**. The valve stem contains a passage for interconnecting the holes **32** and **32'** and is conveniently in the form of a slot **34** extending through the valve stem. The slot is dimensioned to span the holes **32** and **32'** when the valve stem is moved relative to the rod to an "open" position, to thereby allow fluid to flow from one side of the piston **28** to the other, and the stem is movable to a closed position in which the slot is out of registry with the holes to prevent such flow. The valve stem is provided with O-rings **38** and **38'** to assure that there is no leakage from the valve passage to the ends of the stem. The valve is normally maintained in a "closed" position by a spring **37**. In the "closed" position, the slot **34** is out of registry with the holes **32** and **32'** and the valve stem blocks flow of fluid **26**, thus preventing movement of the occupant support. The valve stem is selectively movable to the "open" position by a valve stem actuator conveniently located on the handle **18**. As shown, a button **36** is provided adjacent the grip end **18***b* of the handle, which button is connected through a reciprocable wire **35** contained in a flexible casing **35***a*. The wire **35** and casing **35***a* runs through the handle **18** to the valve stem **33** and the wire is terminally secured to the button **36** and stem **33** while the ends of the casing **35***a* are anchored to the handle and to the piston rod **27** or a part that moves with the piston rod. When the button **36** is depressed, the wire **35** pushes the valve stem **33**, to move the same to its "open" position in which the slot **34** registers with the holes **32** and **32'** thus allowing flow of the fluid **26** from one side of the piston **28** to the other. The movement of the valve compresses the spring **37** and when the button **36** is released, the spring operated to return the valve to its closed position wherein the slot **34** is out of registry with the holes **32** and **32'** thus preventing flow of the fluid.

FIG. 6 illustrates a dampening device having a modified manually operable valve for controlling flow of fluid to opposite sides of the piston. The dampening device of FIG. 6 is similar to FIG. 5 and like numerals are used to designate the same parts while modified parts are indicated by numerals one hundred higher than the corresponding elements of FIG. 5. In the embodiment illustrated in FIG. 6, the valve stem **133** is arranged for rotation relative to the piston rod between an open and closed position. For this purpose, the valve stem is provided with a flattened portion **139** which forms a passage operative in one rotative position of the stem to register with the holes **32** and **32'** and to allow fluid to flow from one side of the piston to the other. The valve stem is selectively rotated between its open and closed position as by the aforementioned wire and casing **35** and **35***a* connected to the handle **18**. The casing **35***a* is anchored to the piston rod as by a clamp **140** and the wire **35** is attached to a pin **141** that extends laterally from the stem **133**. The pin conveniently extends outwardly through an arcuate slot **142** in the piston rod **127**. The sides of the slot slidably engage the pin to limit endwise movement of the stem relative to the rod while the ends of the slot are arranged to form stop faces to limit angular movement of the stem and define the open and closed positions of the valve. The valve is normally urged to its closed position, as by a tension spring **137** conveniently terminally anchored to the pin **141** and piston rod **127**. The valve is manually movable to its open position, as previously explained, by depressing the button **36** on the handle and thus operating to push the wire **35**.

FIG. 7 illustrates a modified arrangement of the dampening device. Many elements of FIG. 7 are similar to FIG. 5 and are numbered with the same numbers. These similar elements have the same function as described above. Modified parts are indicated by numbers two-hundred higher than the corresponding elements of FIG. 5. In the modified arrangement illustrated in FIG. 7, the fluid **26** is allowed to flow from one side of the piston **228** to the other along the cylinder wall **25**. In other words, the piston **228** is a loose-fitting piston mounted on the piston rod **227**. It is to be understood that the same result may be obtained by providing a hole or holes through the piston or by other means of passing the fluid from one side of the piston to the other.

FIG. 7 also illustrates an additional feature of the invention, showing a one-way valve to allow the fluid **26** to flow faster in one direction than in the other. This one-way valve consists of a hole **229** through the piston **228**. The hole is covered by a flexible disk **230** so that when the piston moves in one direction, the valve is closed and the flow is restricted to along the cylinder wall **25**. When the piston moves in the opposite direction, the valve is opened allowing the fluid to flow faster. The dampening device is mounted in such a manner that the valve is closed when the support is being tilted rearwardly and opened when the support is moved from the tilted position to its normal upright position. Thus, there is a greater retarding of movement when the support is being tilted, to avoid apprehension of falling by the occupant.

FIG. 8 is an illustration of a modified arrangement for mounting the dampening device **21**. In this embodiment, the device includes a cylinder **325**, a piston **328** slidable in the cylinder, and a rod **327** connected to the piston and extending out of the cylinder. As in the preceding embodiment, the rod extends through both ends of the cylinder to maintain a constant volume in the cylinder. The cylinder is filled with hydraulic fluid and any of the aforedescribed arrangements for controlling the flow of fluid between opposite sides of the piston may be employed. Except for the mounting of the dampening device, FIG. 8 is similar to FIGS. 3 and 4 and like numbers are used to designate the same parts which have previously been described. In this modified arrangement, the device is

mounted in a generally vertical position and the piston rod 327 is swingably connected at the upper end to a recessed bracket 43 in the frame 12. The lower end of the device is connected to the base bracket 19 by means of pins 23. The base bracket has an opening 44 which leads to a well 22 in the base 13 and the lower end of the dampening device is positioned relative to the well so that the lower end of the piston rod can extend into the well when the occupant support is lowered to an ordinary position.

It can be readily seen that in the preferred embodiment of the dampening device as indicated in either FIG. 5 or 6, the device normally locks the occupant support against movement. The locking arrangement may be released by merely pressing the button located on the handle and made operative to regulate the tilting of the occupant support. Conversely, by releasing the button, the movement of the occupant support may be stopped at any position either intermediate or at the extremes of movement. When the locking arrangement is released by pressing the button, the handle can be pushed by an operator and the occupant support thereby repositioned. The device operates to slow or dampen the movement during such repositioning. It should be understood that the amount of dampening is controlled by the area of the piston, the viscosity of the fluid utilized and the size of holes provided for flow of fluid. It has been found that a compact design can be obtained utilizing a relatively small sized cylinder in which the effective area of the piston is only about one-half square inch, if a light weight oil is used and an orifice of approximately 0.3" diameter is provided.

From the foregoing it is thought that the operation and construction of our invention will be readily understood and while we have described and illustrated various embodiments of our invention herein, this has been done by way of illustration and not of limitation and we do not wish the invention to be limited except as required by the scope of the claims appended hereto.

We claim:

1. In a tiltable beautician's chair, the combination of: a base; an occupant support comprising a substantially rigid frame structure, a seat carried by said frame structure, and a back secured to said frame structure; said support being pivotally connected to the base for movement about a generally horizontal axis; said horizontal axis being substantially parallel to the intersection of the seat and back of said support, said support being movable through an arc whereby the center of gravity of the support and occupant moves past the horizontal axis when the support is moved to a tilted position; a manually operable tilt means including a shaft rotatably supported on said base and a handle for turning said shaft, means connected to said shaft and to said occupant support for tilting said support about said horizontal axis in response to turning of said shaft; dampening means for retarding the movement of the support when being tilted, said dampening means comprising an enclosed hydraulic cylinder, a piston in the cylinder, and a piston rod extending out of the cylinder, a non-compressible fluid contained in said cylinder, said dampening means having means for regulating the flow of fluid from one side of said piston to the other; means for attaching one end of said dampening means to said base and means operatively connecting the other end of said dampening means to said tilt means for movement of the piston in the cylinder in response to turning of said shaft.

2. In a tiltable beautician's chair having a base and an occupant support pivotally connected to the base for movement about a generally horizontal axis, the combination with said chair of a manually operable tilt means comprising a shaft rotatably mounted on said base, means operatively connecting said shaft to said occupant support for tilting the support in response to rotation of the shaft, and a handle for rotating said shaft; dampening means for retarding movement of said occupant support when being tilted, said dampening means comprising an enclosed hydraulic chamber, a movable wall in said chamber, a rod attached to said wall and extending out of said chamber, and a non-compressible fluid contained in said chamber; means connecting said chamber of said dampening means to said base and means connecting said rod to said shaft of said tilt means to operate the dampening means in response to rotation of the shaft during tilting of the occupant support; said rod of said dampening means having valve means mounted thereon operative between an open and closed position to regulate the flow of fluid from one side of said wall to the other; said handle of said tilt means having an actuating means operatively connected to said valve means, said actuating means being manually operative to move said valve means to said open position whereby said fluid may flow and said occupant support may be repositioned by moving said handle of said tilt means; and said valve means having means to return said valve to said closed position when said actuating means is released to prevent movement of said tilt means and said occupant support.

3. The combination of claim 2 wherein said rod of said dampening means is hollow and said valve means is disposed inside said rod, said valve means being slidably operative between said open and said closed position.

4. The combination of claim 2 wherein said rod of said dampening means is hollow and said valve means is disposed inside said rod, said valve means being rotatably operative between said open and said closed position.

5. The combination of claim 1 wherein said means for regulating the flow of fluid includes means for restricting the flow of fluid from one side of said piston to the other during rearward tilting of the occupant support, and valve means for by-passing said fluid more rapidly from said other side of the piston to said one side when the occupant support is being moved to an upright position.

6. In a tiltable beautician's chair, the combination of: a base; an occupant support comprising a substantially rigid frame structure, a seat carried by said frame structure, and a back secured to said frame structure; said support being pivotally connected to the base for movement about a generally horizontal axis; said horizontal axis being substantially parallel to the intersection of the seat and back of said support, said axis being located in back of the center of gravity of said support when in an upright position and in front of the center of gravity of said support when in tilted position; a manually operable means for tilting said support about said horizontal axis and comprising a shaft rotatably mounted on said base, a means operatively connecting said shaft to said occupant support for tilting the support in response to rotation of the shaft, and a handle for rotating said shaft; a dampening means for retarding movement of the occupant support when being tilted and comprising a hydraulic cylinder, a piston movable in the cylinder, a piston rod attached to the piston and extending out of the cylinder, a non-compressible fluid contained in the cylinder, and valve means operative between an open and a closed position for regulating the flow of fluid from one side of the piston to the other; means connecting one end of the dampening means to the base and means connecting the other end of the dampening means to said shaft to operate the dampening means during tilting of the occupant support; and actuating means on said handle for selectively controlling the valve means between said open and closed positions.

7. In a tiltable beautician's chair, the combination of: a base; an occupant support including a seat and a back and pivotally connected to the base for movement about a generally horizontal axis generally parallel to the intersection of the seat and back; manually operable means

for tilting said support about said horizontal axis and including a shaft rotatably mounted on the base, means operatively connecting said shaft to said occupant support for tilting the support in response to rotation of the shaft, and a handle adjacent the side of the support for rotating the shaft; dampening means on the chair for retarding movement of the support when being tilted and including a hydraulic chamber, a movable wall in the chamber, a rod attached to the wall and extending out of the chamber, a non-compressible fluid contained in the chamber, and valve means operative between an open and a closed position for regulating the flow of said fluid from one side of the wall to the other; and actuating means on the handle for selectively controlling the valve means between the open and closed positions.

8. In a tiltable beautician's chair, the combination of: a base; an occupant support including a seat and a back and pivotally connected to the base for movement about a generally horizontal axis generally parallel to the intersection of the seat and back; hydraulic dampening means on the chair for retarding movement of the support when being tilted; manually operable tilt means for tilting the occupant support and returning the same to upright position and including a shaft rotatably mounted on the base, means for rotating the shaft, a first member secured to the shaft for rotation therewith, a second member pivotally connected to the occupant support and the first member, and an over-center lock for engaging said members to hold the occupant support in tilted position; and means for operatively connecting the hydraulic dampening means to the tilt means.

9. In a tiltable beautician's chair, the combination of: a base; an occupant support including a seat and a back and pivotally connected to the base for movement about a generally horizontal axis; said axis being generally parallel to the intersection of the seat and back and adjacent the rear of the seat; manually operable tilt means for tilting the occupant support and returning the same to the upright position and including a shaft rotatably mounted on the base, a handle for turning the shaft, and linkage means connecting the shaft to the occupant support for tilting the support in response to turning of the shaft; means for holding the occupant support in tilted position; dampening means mounted between the base and occupant support for retarding movement of the occupant support when being tilted and including a hydraulic chamber having a non-compressible fluid therein, a movable wall in the chamber, a rod attached to the wall and extending outside the chamber, and means for regulating the flow of fluid from one side of the wall to the other; and means for operatively connecting the dampening means to the tilt means.

10. In a tiltable beautician's chair, the combination of: a base; an occupant support comprising a substantially rigid frame structure, a seat carried by said frame structure, and a back secured to said frame structure; said support being pivotally connected to the base for movement about a generally horizontal axis; said horizontal axis being substantially parallel to the intersection of the seat and back of said support and adjacent to the rear of the seat; said support being movable through an arc whereby the center of gravity of the support and occupant moves past the horizontal axis when the support is moved to a tilted position; a manually operable means for tilting said support about said horizontal axis and including a shaft rotatably mounted on the base, a handle for turning the shaft, and linkage means connecting the shaft to the occupant support for tilting the support in response to turning of the shaft; and dampening means operatively connected to the base for retarding the movement of the support when being tilted, said dampening means comprising an enclosed hydraulic chamber, a movable wall in said chamber, a rod attached to said wall, a non-compressible fluid contained in said chamber, means for regulating the flow of fluid from one side of said wall to the other, and means connecting one end of said dampening means through said linkage means to said occupant support.

11. In a tiltable beautician's chair, the combination of: a base and an occupant support including a seat and a back and pivotally connected to the base for movement about a generally horizontal axis, said axis being substantially parallel to the intersection of the seat and back and adjacent the rear of the seat, manually operable tilt means for tilting the occupant support and for returning the same to upright position, dampening means on the chair for retarding the movement of said support when being tilted and returned to upright position, said dampening means comprising an enclosed hydraulic chamber, a movable wall in said chamber, a rod attached to said wall, a non-compressible fluid contained in said chamber, and having means to regulate the flow of said fluid from one side of said wall to the other, said dampening means being disposed between said base and said occupant support; and connecting means for operatively connecting one end of said dampening means to said tilt means for operation of the dampening means in response to movement of the tilt means.

12. In a tiltable beautician's chair, the combination of: a base and an occupant support pivotally connected to the base for movement about a generally horizontal axis, said support being movable through an arc so that the center of gravity of the support and occupant moves past the horizontal axis when the support is moved to a tilted position, dampening means for retarding movement of said support when being tilted, said dampening means comprising a cylinder disposed horizontally between the base and the occupant support, a piston reciprocal in said cylinder, a rod attached to said piston and extending out of said cylinder, a non-compressible fluid contained in said cylinder, and having means to regulate the flow of fluid from one side of the piston to the other; a manually operable tilt means comprising a shaft mounted on said base, a handle for rotating said shaft, a first member secured to the shaft for rotation therewith, a second member pivotally connected to the occupant support and the first member, and means for holding the occupant support in tilted position; said dampening means having one end connected to said base and the other end connected to said tilt means and so arranged that said dampening means operates in a generally horizontal position.

References Cited

UNITED STATES PATENTS

186,782	1/1877	Angle	297—328
207,790	9/1878	Wolridge	297—328
452,686	5/1891	Adams et al.	297—326
1,255,321	2/1918	Laraia	297—71
1,545,269	7/1925	Munroe	297—328
1,579,130	3/1926	Murray	297—303
1,821,299	9/1931	Ferreira	297—328
1,887,647	11/1932	Kochs et al.	297—71
2,182,915	12/1939	Connelly.	
2,296,212	9/1942	Kluglein	297—327
2,832,656	4/1958	Perry	269—325
3,024,067	3/1962	Brandoli	297—355
3,135,549	6/1964	Larsson	297—326
3,236,515	2/1966	Ackerman	297—355

FOREIGN PATENTS

586,831	10/1933	Germany.
329,309	6/1958	Switzerland.

DAVID J. WILLIAMOWSKY, *Primary Examiner.*

FRANK B. SHERRY, FRANCIS K. ZUGEL, *Examiners.*