(19) Europäisches Patentamt
European Patent Office
Office européen des brevets

(11) EP 0 532 308 B1

(12) **EUROPEAN PATENT SPECIFICATION**

(45) Date of publication and mention of the grant of the patent:
05.02.1997 Bulletin 1997/06

(51) Int Cl.[6]: **G03G 15/00**

(21) Application number: **92308204.4**

(22) Date of filing: **10.09.1992**

(54) Replaceable sub-assemblies for electrostatographic reproducing machines

Auswechselbare Einzelteile für elektrostatografische Kopiermaschinen

Sous-ensembles remplaçables pour machines électrostatographiques de reproduction

(84) Designated Contracting States:
DE FR GB

(30) Priority: **11.09.1991 GB 9119483**

(43) Date of publication of application:
17.03.1993 Bulletin 1993/11

(73) Proprietor: **XEROX CORPORATION**
Rochester New York 14644 (US)

(72) Inventors:
- **Le Sueur, Eric John**
  Wembley, Middlesex HA9 9QH (GB)
- **Taylor, Shelley May**
  Stevenage, Hertfordshire SG2 8SZ (GB)
- **Less, Krzysztof Jerzy**
  Ealing, London W13 8NQ (US)
- **Collins, Robin Ashley**
  Biggleswade, Bedfordshire SG18 9NJ (GB)

(74) Representative: **Reynolds, Julian David et al**
Rank Xerox Ltd
Patent Department
Parkway
Marlow Buckinghamshire SL7 1YL (GB)

(56) References cited:
EP-A- 0 244 104
EP-A- 0 262 640
EP-A- 0 393 627
EP-A- 0 395 320

Note: Within nine months from the publication of the mention of the grant of the European patent, any person may give notice to the European Patent Office of opposition to the European patent granted. Notice of opposition shall be filed in a written reasoned statement. It shall not be deemed to have been filed until the opposition fee has been paid. (Art. 99(1) European Patent Convention).

EP 0 532 308 B1

Description

The present invention relates to electrostatographic reproducing machines and, in particular, to machines which incorporate replaceable sub-assemblies.

Replaceable sub-assemblies, or cartridges, for use in electrostatographic copiers and printers are known. In some machines, for example, the machine photoreceptor and its supporting hardware are assembled into a process unit which can be removed from the machine and replaced by a new unit as required. Similarly, developer cartridges and toner supply cartridges can be provided.

One form of replaceable unit for an electrostatographic reproducing machine is described in US-A-4 827 308. That unit houses a belt photoreceptor and various processing means, namely a development device, a transfer corotron, a cleaner and a charge corotron.

An electrostatographic reproducing machine that employs a xerographic cartridge, a developer cartridge and a toner cartridge is described in US-A-4 961 088. Each cartridge has an identification/memory chip in the form of an EEPROM (Electrically Erasable Progammable Read Only Memory) integral therewith, which is electrically connected with the machine when the cartridge is inserted. The EEPROM ensures that only authorized cartridges are used in the machine, and it also maintains a running count of the number of images made while a cartridge is in use so that a cartridge can be disabled when it reaches the end of its life.

US-A-4 500 195 describes a replaceable unit for an image forming apparatus, comprising a photosensitive drum, a toner supply cartridge and a toner recovery container. When the replaceable unit is manufactured, an arm on the outside of the unit is set to a certain position dependent on the characteristics of the photosensitive drum and, when the unit is inserted in the machine, the arm automatically sets the machine to operate under the most appropriate image forming conditions.

EP-A-0 262 640 discloses a copier having a replaceable process unit into which removable toner cartridges are installed. Three different toner cartridges are provided for each process unit and in a particular order, must be inserted into the process unit one at a time. Each cartridge has a respective terminal pattern at one end and, when it is inserted into the process unit, the terminal pattern cooperates with and is detected by a detecting means in the copier.

A replaceable sub-assembly for an electrostatographic reproducing machine does not necessarily remain in place in a machine continuously for the whole of its useful life. For example, if a different colour of toner is required, a sub-assembly may be removed and temporarily replaced by another. The present invention is concerned in particular with sub-assemblies which incorporate a developer device and is directed towards enabling the best performance to be obtained from such a sub-assembly regardless of how often it is removed from a machine or how many different machines the sub-assembly is used in throughout its life.

The present invention provides a replaceable sub-assembly for an electrostatographic reproducing machine, the sub-assembly including a developer device for developing, with toner, a latent image on a circulating imaging member and being provided with a programmable memory arranged to be connected with the machine when the sub-assembly is inserted therein and thereby to receive and store an input from the machine representing the usage of the sub-assembly, characterized in that the memory indicates said usage to the machine to adjust at least one operating parameter of the machine in dependence on that usage.

The memory may be arranged to receive an input representing the number of images developed, or an input representing the image area on which toner is deposited by the developer device, while the sub-assembly is inserted in a machine.

The operating parameter that is adjusted may be the relationship between toner usage by the developer device and operation of a toner dispensing means which dispenses toner to the developer device.

The present invention further provides an electrostatographic reproducing machine comprising a circulating imaging member, means for generating a latent image on the imaging member; a developer device for developing the latent image with toner, and means for dispensing toner to the developer device from a toner supply, wherein the developer device forms part of a sub-assembly which can be removed from, and replaced in, the machine, the sub-assembly being provided with a programmable memory which is connected with the machine when the sub-assembly is inserted therein, thereby to receive and store an input from the machine representing the usage of the sub-assembly, characterized in that the memory indicates said usage to the machine to adjust at least one operating parameter of the machine in dependence on that usage.

By way of example only, an embodiment of the invention will be described with reference to the accompanying drawings, in which:

Fig. 1 is a diagrammatic view of an electrostatographic printer;
Fig. 2 is a schematic cross-section of a replaceable sub-assembly for the printer of Fig. 1;
Fig. 3 is a perspective view of the sub-assembly shown in Fig. 2, illustrating the connection of the sub-assembly in the printer;
Fig. 4 is a diagram illustrating the relationship between various parts of the printer, and
Figs. 5 is a flow diagram illustrating part of the printer operating procedure.

Fig. 1 shows a laser printer employing a replaceable sub-assembly in the form of a xerographic cassette 1 which is shown in greater detail in Figs. 2 and 3. A xe-

rographic imaging member in the form of an endless flexible photoreceptor belt is housed within the cassette 1, together with other xerographic process means as described below. A raster output scanner (ROS) 2 provides an imaging beam 3 which is directed at the photoreceptor belt through an imaging slit 12 (Fig.2) in the cassette 1 to form an electrostatic latent image on the belt. The image is developed within the cassette and is transferred, at a transfer station 4, to a copy sheet which is fed to that location from one of four supply trays 5, 6, 7 and 8. The transferred image is fused to the copy sheet at a fusing station 9 and the copy sheet may then be delivered from the printer to be collected either in a sample tray 10 on top of the machine or in a stacking tray on the side of the machine. Alternatively, a copy sheet with a fused image on one side only may be put into a trayless duplex path within the machine, to be returned to the transfer station 4 to receive an image on the other side before being delivered from the machine into one of the trays 10, 11.

The raster output scanner 2 incorporates a He-Ne laser to generate the imaging beam 3, a conventional rotating polygon device to sweep the beam across the surface of the photoreceptor belt, and an acoustic modulator. The beam is modulated in accordance with input signals received from a remote image source, for example a user interface and keyboard (not shown). The operation of a raster output scanner of that type to generate a latent image on a photoreceptor is well understood and need not be described here. The processing of the image signals from the remote source is handled by an electronic sub-system of the printer, indicated at 15, while operation of the printer generally is under the control of a machine control unit (not shown) which includes one or more microprocessors and suitable memories, for holding the machine operating software.

The cassette 1 may be similar to that described in US Patent No. 4 827 308. In addition to the photoreceptor belt 20, it includes a charge scorotron 21; a developer device 22; a transfer corotron 23 and a cleaning device 24. The charge scorotron 21 is located upstream of the imaging slit in the cassette to deposit a uniform electrostatic charge on the surface of the belt before it is exposed to the imaging beam 3. The developer device 22 is located downstream of the imaging slit to bring developer mixture into proximity with, and thereby develop, the electrostatic latent image on the belt. The developer mixture is a two-component mixture comprising toner and a magnetically-attractable carrier. Toner is transferred to the belt 20 during image development and replacement toner is dispensed periodically, through operation of a toner dispense motor (not shown), from a hopper (not shown) into the housing of the developer device 22. The transfer corotron 23 is located at the transfer station 4 to assist in transferring the developed image from the belt to the copy sheet which enters the cassette at that point. Finally, the cleaning device 24 removes any residual toner particles from the surface of the photoreceptor belt which is then illuminated by a discharge lamp to remove any electrostatic charge remaining on the belt.

The cassette 1, as already mentioned, is removable from the printer and can be replaced by another cassette if any of the process elements begins to deteriorate. Alternatively, it can be replaced by a cassette which contains toner of a different colour.

The cassette 1 has a memory chip 30, shown in Fig. 3, in the form of an EEPROM (Electrically Erasable Programmable Read Only Memory) mounted in the top cover of the cassette. Contact pads 31 are provided on the chip so that, when the cassette is inserted into the printer, the chip is automatically connected to the machine control unit via a terminal block 32 on a part 33 of the printer. When inserted in the printer, the memory 30 receives information from the printer control unit reflecting the usage (and hence the age) of the cassette 1, and stores that information. For example, the memory 30 may receive and store information concerning the number of prints made while the cassette is in position in the printer, that information being retained if the cassette is removed from the printer for any reason. That information is, in turn, utilized to adjust one or more operating parameters of the xerographic system of the printer to take account of the age of the cassette and thereby to enable the output quality of the printer to be maintained and the operating life of the cassette to be prolonged. The operating parameters that may be adjusted in dependence on the information stored in the memory 30 include, for example, photoreceptor charge level, exposure level, developer bias level and the response level of the ADC (automatic density control) system.

Throughout normal operation of the printer, the ADC system regularly measures the toner density in the prints produced and signals the printer control unit to operate the toner dispensing motor to supply toner to the developer device 22 when necessary. The response of the control unit, and hence the amount of toner dispensed, is determined by the so-called ADC "setpoint" in the machine memory. Automatic density control systems for use in electrostatographic reproducing machines are well known and need not be described in detail here. A known type of automatic density control system comprises means for generating a test patch on the photoreceptor and a sensor for measuring the reflectance of the developed patch to determine the toner density: one such system is described, for example, in US-A- 4 551 004, and a test patch generator suitable for a laser printer of the type shown in Fig. 1 is described in our co-pending UK Patent Application No. 91 194 85.2, now UK Patent No.2,259,998.

As the age of the cassette 1 increases, the development characteristics of the developer device 22 may change, leading to, for example, deterioration of the line development performance of the printer even though the solid area development capability may remain con-

stant due to the action of the ADC system. It is however possible to regain the line development performance at the expense of the solid area development (SAD) performance by adjusting the ADC setpoint as the cassette ages, so that the line development performance stays constant with age but the SAD performance changes instead. Thus, one possible use of the information contained in the cassette memory 30 is to enable such adjustment of the ADC setpoint to be carried out. When the cassette shown in Figs. 2 and 3 is inserted in the printer, the machine control unit is immediately supplied with information concerning the age of the cassette and at regular intervals in the life of the cassette (as monitored by the machine controller in conjunction with the memory device 30), when it is estimated that the line density performance will have drifted away from its intended performance level, the ADC setpoint is adjusted to restore the line development performance. That is illustrated in Fig. 4 which shows the machine control unit 40 with an input from the conventional automatic density sensor 41 and also from the cassette memory 30. The response of the machine control unit to the signal from the sensor 41 is adjusted in accordance with the input from the cassette memory 30 and in turn adjusts the operation of the toner dispensing motor 42.

The change in the SAD performance which results from the above-described procedure may, however, be unacceptable. If so, a similar procedure can be used to change other parameters such as the photoreceptor charge level, the exposure level and the developer bias voltage, in dependence on the age of the cassette 1, at the same time as changing the ADC setpoint so that the line development performance and the SAD performance are both satisfactory. More particularly, for any cassette age, it is possible to select values of the ADC setpoint, the photoreceptor charge level, the exposure level and the developer bias voltage such that both the line development performance and the SAD performance meet their requirements. For each additional parameter that is to be adjusted, the appropriate control loop would appear in Fig. 4 in parallel with the loop 42, 22, 41.

Another effect that may occur as the cassette 1 ages is that the concentration of toner in the sump of the developer device drops even though the print quality parameters are satisfied. Use of the cassette at such reduced toner concentration levels may cause a shortening of the life of the developer material and thus of the cassette. The adjustment of parameters as described above can also be used to counteract such effects, so that not only are all the print quality parameters at their desired levels for any cassette age, but the toner concentration is also at its desired level, thus prolonging the usable life of the cassette.

Such optimum operating parameters may be determined from experimental and theoretical data on a number of sample systems and held as look-up tables or algorithms in the machine control unit. The storing of the age of the cassette in the memory device 30 makes it possible to use such correction tables and algorithms with accuracy and confidence, since the age of the cassette is stored even when the cassette is withdrawn from the machine, and is retrieved by the machine upon reinstalling the cassette into the machine.

Referring to Figs. 5, whenever the printer is powered up, the print count stored in the cassette memory 30 is read and stored in a non-volatile memory (NVM) in the machine control unit 40. The machine is programmed to update the print count in the cassette memory periodically and, if the machine determines that an update is due, the new value is written back into the cassette memory 30 where it is retained even if the cassette is then removed from the machine. For example, the cassette memory may be updated whenever the machine control unit determines that 200 prints have been made since the cassette memory was previously updated. The machine control unit then examines the cassette print count to determine whether or not it has reached a value at which the operating parameters of the xerographic system should be adjusted. The control unit may, for example, be programmed to adjust the operating parameters when the machine control unit determines that 8000 prints have been made since the previous adjustment. Thereafter, on receipt of a print request, the machine control unit 40 counts the number of prints made and, when a print run is completed, stores the total number of prints made during that run for use in updating the cassette print count as already described. Alternatively, the cassette print count could be updated during, rather than at the end of, a print run.

Because the machine is supplied with information regarding the age of a cassette and can compensate for changes that occur as the development system ages, an improved performance can be achieved together with more efficient use of the available toner in the cassette.

Although the above description refers to the the age of a cassette being related to the accumulated number of prints made while the cassette is in use, other factors could be used to indicate the age of a cassette. For example, the cassette memory 30 could store the number of revolutions of the photoreceptor belt or the number of charge cycles that occur in the cassette, both of which indirectly indicate the number of prints made, or it could store the area coverage (as represented by the number of pixels toned) while the cassette is in use. Alternatively, the cassette memory 30 could be supplied continuously with, and store, information concerning the difference between the intended and the actual charge on the photoreceptor 20 as an indication of the age of the cassette 1. When the cassette is removed from the printer, for example because a cassette containing toner of a different colour is required, the most recent measurement indicating the age of the cassette is stored and is immediately available for use by the machine controller as already described.

Although the above description refers to the cassette of Figs. 2 and 3 as being used in a laser printer, that is not essential. A cassette incorporating a memory for storing information concerning the age of the cassette could be used, for example, in an electrostatographic copier which could be of the type described in US-A-4 827 308. Moreover, the cassette need not be of the type described above. The cassette could, for example, simply be a toner cassette and need not include the photoreceptor of the machine.

A cassette of the type described above could be used in a printer of the type described in our co-pending U.K. Patent Application No.9119484.5, now UK Patent No. 2,259,583, in which the number of pixels to be toned in a photoreceptor cycle is used to indicate the amount of toner that should be dispensed to the developer device 22 during that cycle. In that printer, the toner density monitoring system is used to provide additional control over the amount of toner that is dispensed to the developer device 22 in any given photoreceptor cycle.

Claims

1. A replaceable sub-assembly (1) for an electrostatographic reproducing machine, the sub-assembly including a developer device (22) for developing, with toner, a latent image on a circulating imaging member (20) and being provided with a programmable memory (30) arranged to be connected with the machine when the sub-assembly is inserted therein and thereby to receive and store an input from the machine representing the usage of the sub-assembly, characterized in that the memory indicates said usage to the machine to adjust at least one operating parameter of the machine in dependence on that usage.

2. A sub-assembly as claimed in claim 1, in which the memory is arranged to receive an input representing the number of images developed while the sub-assembly is inserted in a machine, or the image area on which toner is deposited by the developer device.

3. A sub-assembly as claimed in claim 1 or claim 2, in which an operating parameter that is adjusted is the relationship between toner development by the developer device and operation of a toner dispensing means (42) which dispenses toner to the developer device.

4. An electrostatographic reproducing machine comprising a circulating imaging member (20), means (2) for generating a latent image on the imaging member; a developer device (22) for developing the latent image with toner, and means (42) for dispensing toner to the developer device from a toner supply, wherein the developer device forms part of a sub-assembly (1) which can be removed from, and replaced in, the machine, the sub-assembly being provided with a programmable memory (30) which is connected with the machine when the sub-assembly is inserted therein, thereby to receive and store an input from the machine representing the usage of the sub-assembly, characterized in that the memory indicates said usage to the machine to adjust at least one operating parameter of the machine in dependence on that usage.

5. A machine as claimed in claim 4, in which the memory is arranged to receive an input representing the number of images developed while the sub-assembly is inserted in a machine, or the image area on which toner is deposited by the developer device.

6. A machine as claimed in claim 4 or claim 5, in which the toner dispensing means (42) is operable in dependence on toner development by the developer device, and in which an operating parameter that is adjusted is the relationship between the said toner development and operation of the toner dispensing means.

7. A machine as claimed in any one of claims 4 to 6, in which an operating parameter that is adjusted is the charge level on the imaging member, the exposure level to the image generating means and/or the electrical bias in the developer device.

8. A machine as claimed in any one of claims 4 to 7, in which the memory is updated whenever a predetermined number of prints has been made by the machine.

9. A machine as claimed in any one of claims 4 to 8, in which the said at least one operating parameter is adjusted when the memory indicates a predetermined level of usage of the sub-assembly.

Patentansprüche

1. Auswechselbare Baueinheit (1) für ein elektrostatografisches Kopiergerät, wobei die Baueinheit eine Entwicklungsvorrichtung (22) zum Entwickeln eines latenten Bildes mit Toner auf einem umlaufenden Bilderzeugungselement (20) einschließt und mit einem programmierbaren Speicher (30) versehen ist, der angeordnet ist, mit dem Gerät verbunden zu werden, wenn die Baueinheit darin eingeführt wird, und um dadurch eine Eingabe von dem Gerät zu erhalten und zu speichern, die die Benutzung der Baueinheit wiedergibt, **dadurch gekennzeichnet**, daß der Speicher die genannte Benutzung dem Gerät angibt, um mindestens einen Be-

triebsparameter des Geräts in Abhängigkeit von dieser Benutzung einzustellen.

2. Eine Baueinheit, wie in Anspruch 1 beansprucht, in der der Speicher angeordnet ist, eine Eingabe zu erhalten, die die Anzahl der entwickelten Bilder, während die Baueinheit in ein Gerät eingesetzt ist, oder dem Bildbereich darstellt, auf dem Toner durch die Entwicklungsvorrichtung abgesetzt worden ist.

3. Eine Baueinheit, wie in Anspruch 1 oder Anspruch 2 beansprucht, in der ein Betriebsparameter, der eingestellt wird, die Beziehung zwischen der Tonerentwicklung durch die Entwicklungsvorrichtung und dem Betrieb einer Tonerausgabeeinrichtung (42) ist, die Toner an die Entwicklungsvorrichtung ausgibt.

4. Ein elektrostatografisches Kopiergerät, das umfaßt ein umlaufendes Bilderzeugungselement (20), eine Einrichtung (2) zum Erzeugen eines latenten Bildes auf dem Bilderzeugungselement; eine Entwicklungsvorrichtung (22) zum Entwickeln des latenten Bildes mit Toner und eine Einrichtung (42) zum Ausgeben von Toner zu der Entwicklungsvorrichtung von einem Tonervorrat, worin die Entwicklungsvorrichtung Teil einer Baueinheit (1) bildet, die von dem Gerät entfernt und in ihm ersetzt werden kann, wobei die Baueinheit mit einem programmierbaren Speicher (30) versehen ist, der mit dem Gerät verbunden ist, wenn die Baueinheit darin eingesetzt ist, um dadurch eine Eingabe von dem Gerät zu erhalten und zu speichern, die die Benutzung der Baueinheit wiedergibt, **dadurch gekennzeichnet**, daß der Speicher die genannte Benutzung dem Gerät angibt, um mindestens einen Betriebsparameter des Geräts in Abhängigkeit von dieser Benutzung einzustellen.

5. Ein Gerät, wie in Anspruch 4 beansprucht, in dem der Speicher angeordnet ist, eine Eingabe zu erhalten, die die Anzahl der entwickelten Bilder, während die Baueinheit in ein Gerät eingesetzt ist, oder den Bildbereich darstellt, auf dem Toner durch die Entwicklungsvorrichtung abgesetzt worden ist.

6. Ein Gerät, wie in Anspruch 4 oder 5 beansprucht, in dem die Tonerausgabeeinrichtung (42) in Abhängigkeit von der Tonerentwicklung durch die Entwicklungsvorrichtung betreibbar ist, und in dem ein Betriebsparameter, der eingestellt wird, die Beziehung zwischen der genannten Tonerentwicklung und dem Betrieb der Tonerausgabeeinrichtung ist.

7. Ein Gerät, wie in irgendeinem der Ansprüche 4 bis 6 beansprucht, in dem ein Betriebsparameter, der eingestellt wird, der Aufladepegel auf dem Bilderzeugungselement, der Belichtungspegel bei der Bilderzeugungseinrichtung und/oder die elektrische Vorspannung in der Entwicklungsvorrichtung ist.

8. Ein Gerät, wie in irgendeinem der Ansprüche 4 bis 7 beansprucht, in dem der Speicher aktualisiert wird, wenn immer eine vorbestimmte Anzahl von Drucken durch das Gerät hergestellt worden sind.

9. Ein Gerät, wie in irgendeinem der Ansprüche 4 bis 8 beansprucht, in dem der genannte mindestens eine Betriebsparameter eingestellt wird, wenn der Speicher einen vorbestimmten Wert der Benutzung der Baueinheit angibt.

Revendications

1. Sous-ensemble remplaçable (1) pour une machine de reproduction électrostatographique, le sous-ensemble comprenant un dispositif de développement (22) destiné à développer, avec du toner, une image latente sur un élément de formation d'image en mouvement (20) et étant équipé d'une mémoire programmable (30) conçue pour être reliée à la machine lorsque le sous-ensemble est introduit dans celle-ci, et recevoir ainsi et mémoriser une entrée provenant de la machine, représentant l'utilisation du sous-ensemble, caractérisé en ce que la mémoire indique ladite utilisation à la machine afin d'ajuster au moins un paramètre de fonctionnement de la machine en fonction de cette utilisation.

2. Sous-ensemble selon la revendication 1, dans lequel la mémoire est conçue pour recevoir une entrée représentant le nombre d'images développées pendant que le sous-ensemble est introduit dans une machine, ou bien la surface d'image sur laquelle du toner est déposé par le dispositif de développement.

3. Sous-ensemble selon la revendication 1 ou la revendication 2, dans lequel un paramètre de fonctionnement qui est ajusté est la relation existant entre le développement de toner par le dispositif de développement et le fonctionnement d'un moyen de distribution de toner (42) qui distribue du toner au dispositif de développement.

4. Machine de reproduction électrostatographique comprenant un élément de formation d'image en mouvement (20), un moyen (2) destiné à engendrer une image latente sur l'élément de formation d'image, un dispositif de développement (22) destiné à développer l'image latente avec du toner, et un moyen (42) destiné à distribuer du toner au dispositif de développement à partir d'une réserve de toner, dans laquelle le dispositif de développement

forme partie d'un sous-ensemble (1) qui peut être sorti de, et remplacé dans, la machine, le sous-ensemble étant équipé d'une mémoire programmable (30) qui est reliée à la machine lorsque le sous-ensemble est introduit dans celle-ci, afin de recevoir ainsi et de mémoriser une entrée provenant de la machine, représentant l'utilisation du sous-ensemble, caractérisé en ce que la mémoire indique ladite utilisation à la machine afin d'ajuster au moins un paramètre de fonctionnement de la machine en fonction de cette utilisation.

5. Machine selon la revendication 4, dans laquelle la mémoire est conçue pour recevoir une entrée représentant le nombre d'images développées pendant que le sous-ensemble est introduit dans une machine, ou la surface d'image sur laquelle du toner est déposé par le dispositif de développement.

6. Machine selon la revendication 4 ou la revendication 5, dans laquelle le moyen de distribution de toner (42) peut être mis en oeuvre en fonction du développement de toner par le dispositif de développement, et dans laquelle un paramètre de fonctionnement qui est ajusté est la relation existant entre ledit développement de toner et le fonctionnement du moyen de distribution de toner.

7. Machine selon l'une quelconque des revendications 4 à 6, dans laquelle un paramètre de fonctionnement qui est ajusté est le niveau de charge sur l'élément de formation d'image, le niveau d'exposition au moyen de génération d'image et/ou la polarisation électrique dans le dispositif de développement.

8. Machine selon l'une quelconque des revendications 4 à 7, dans laquelle la mémoire est rafraîchie à chaque fois qu'un nombre prédéterminé d'impressions a été réalisé par la machine.

9. Machine selon l'une quelconque des revendications 4 à 8, dans laquelle ledit au moins un paramètre de fonctionnement est ajusté lorsque la mémoire indique un niveau prédéterminé d'utilisation du sous-ensemble.

Fig.1.

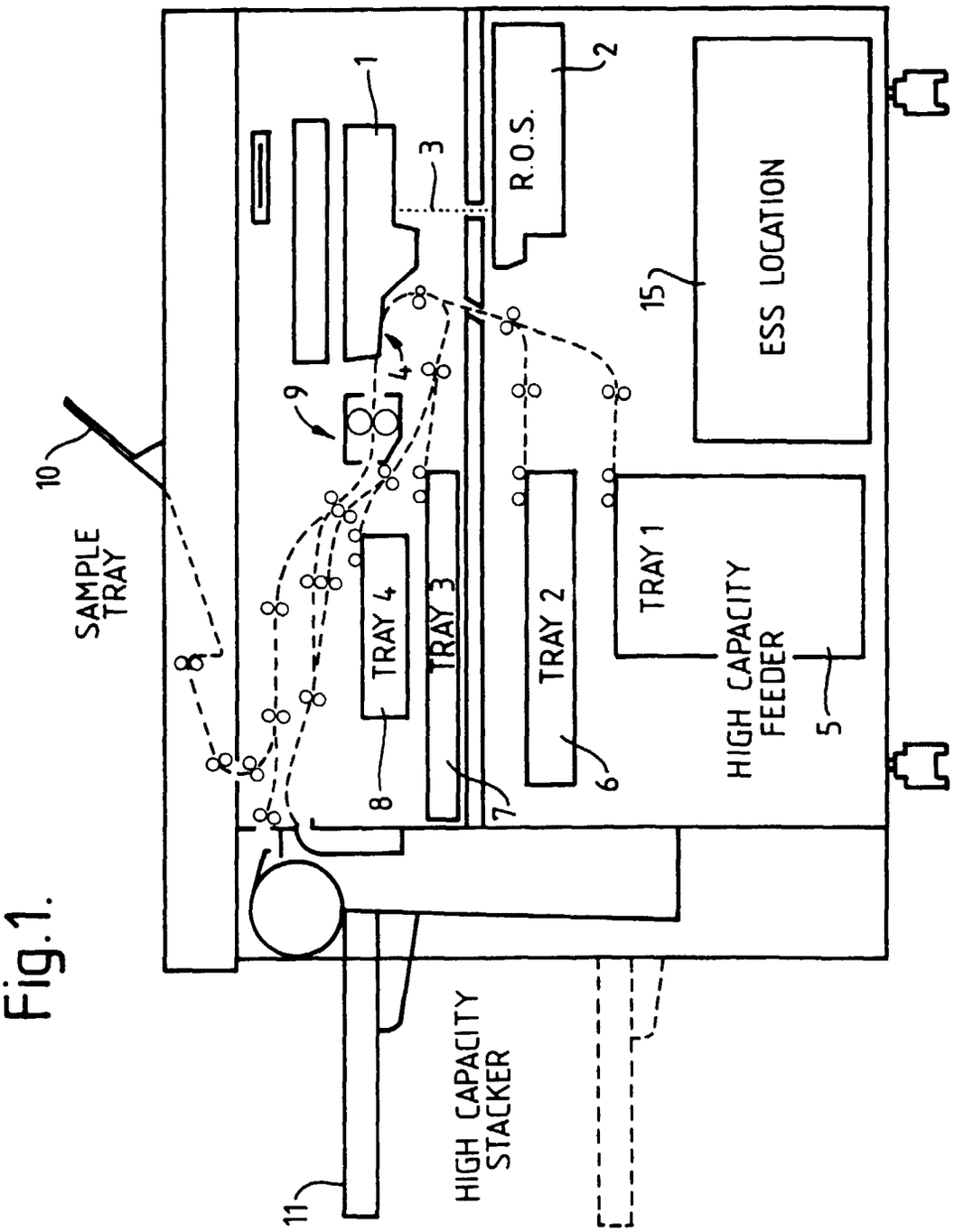
SAMPLE TRAY
10
8
TRAY 4
TRAY 3
TRAY 2
TRAY 1
HIGH CAPACITY FEEDER
5
6
7
8
9
4
1
3
R.O.S.
2
15
ESS LOCATION
HIGH CAPACITY STACKER
11

Fig.2.

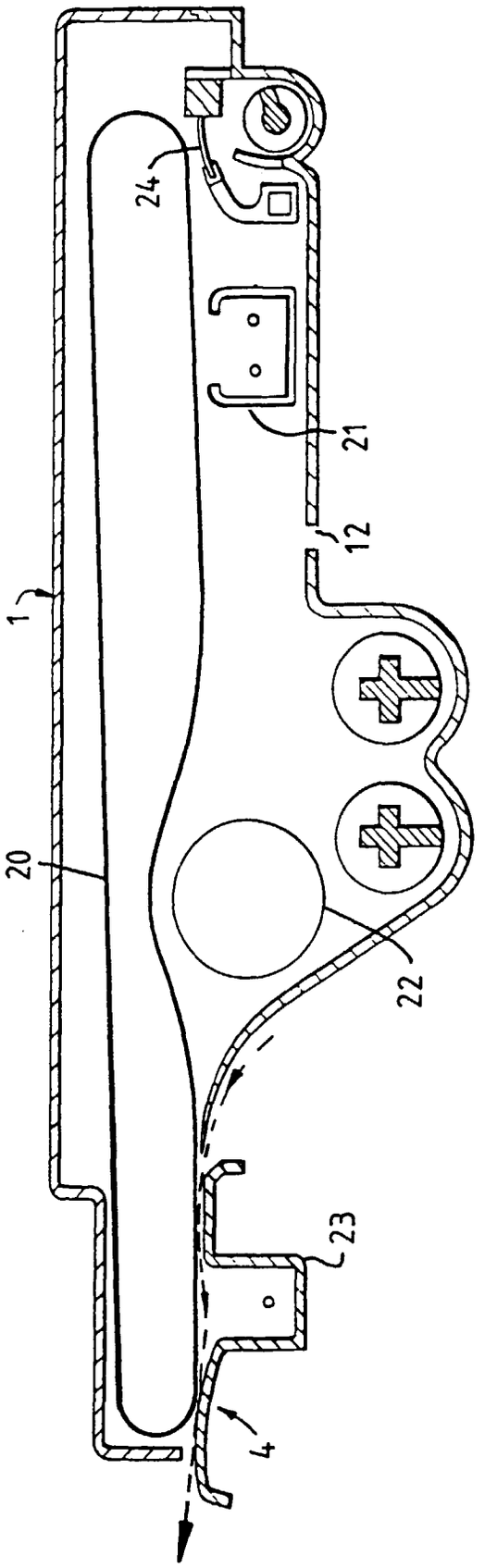

Fig.3.

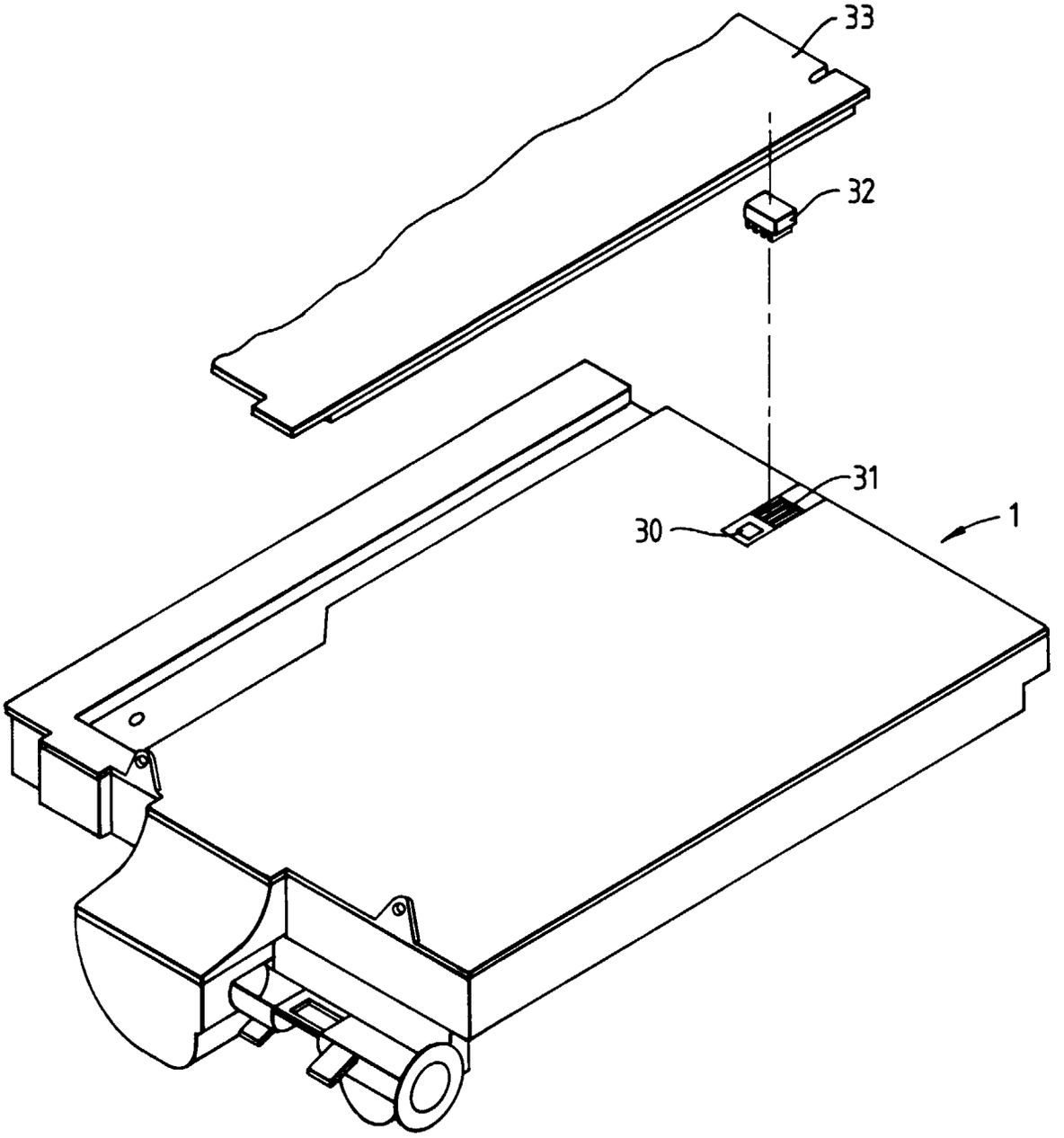

Fig. 4.

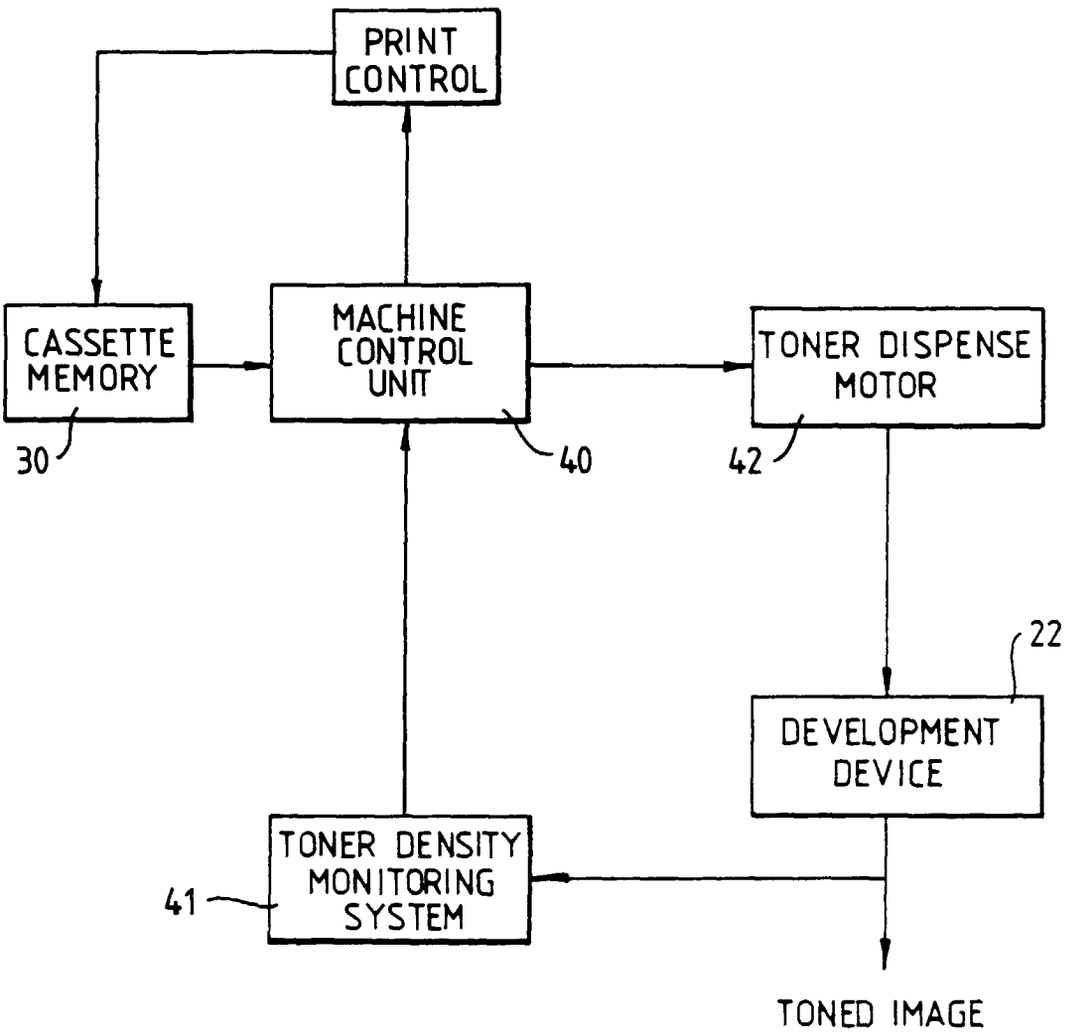
PRINT CONTROL
CASSETTE MEMORY
30
MACHINE CONTROL UNIT
40
TONER DISPENSE MOTOR
42
22
DEVELOPMENT DEVICE
TONER DENSITY MONITORING SYSTEM
41
TONED IMAGE

Fig.5.

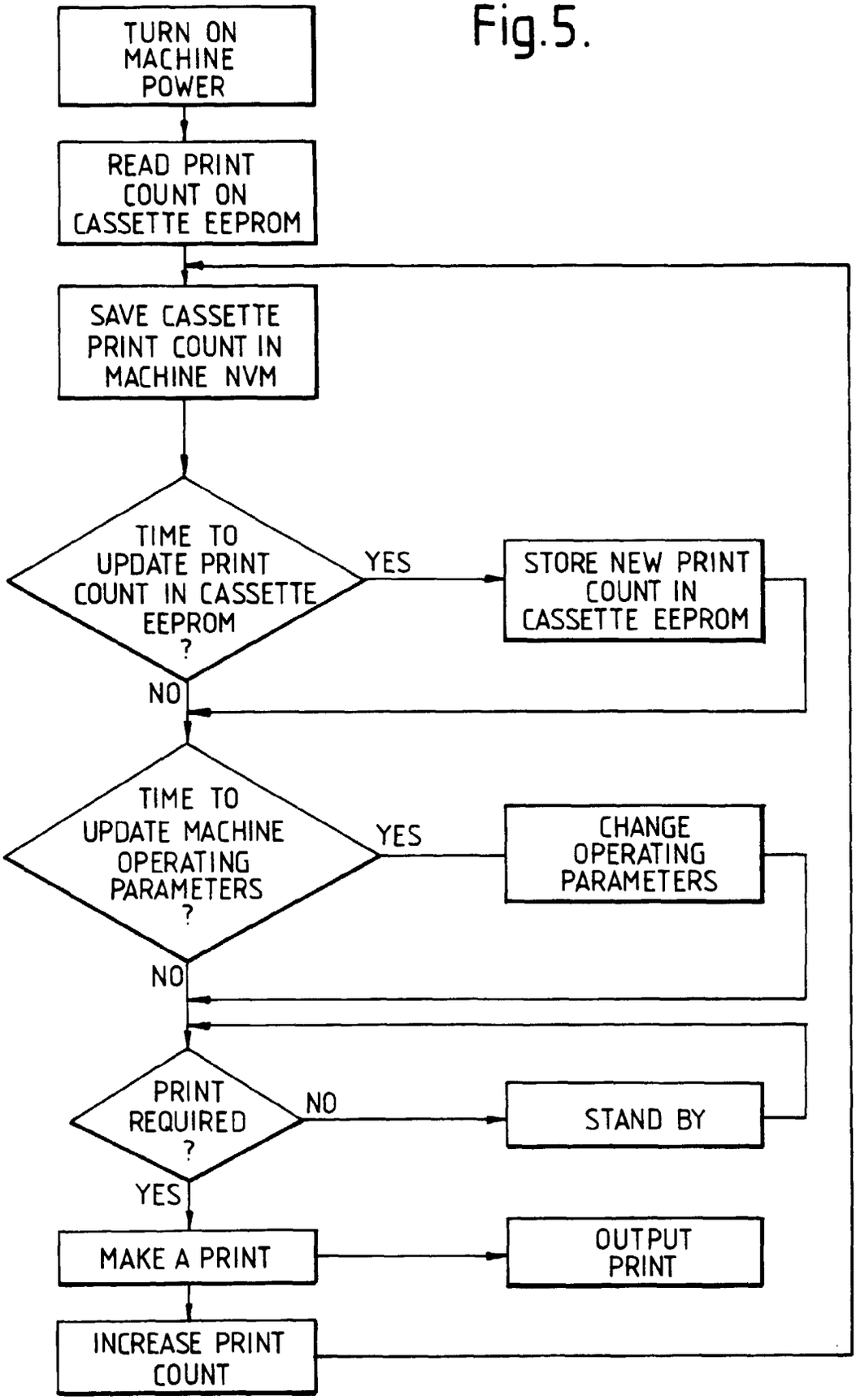
TURN ON MACHINE POWER
READ PRINT COUNT ON CASSETTE EEPROM
SAVE CASSETTE PRINT COUNT IN MACHINE NVM
TIME TO UPDATE PRINT COUNT IN CASSETTE EEPROM ?
YES
STORE NEW PRINT COUNT IN CASSETTE EEPROM
NO
TIME TO UPDATE MACHINE OPERATING PARAMETERS ?
YES
CHANGE OPERATING PARAMETERS
NO
PRINT REQUIRED ?
NO
STAND BY
YES
MAKE A PRINT
OUTPUT PRINT
INCREASE PRINT COUNT