Nov. 12, 1957 C. L. HUTSON 2,812,789

QUICK ACTING C-CLAMP

Filed Dec. 20, 1954

FIG. 1.

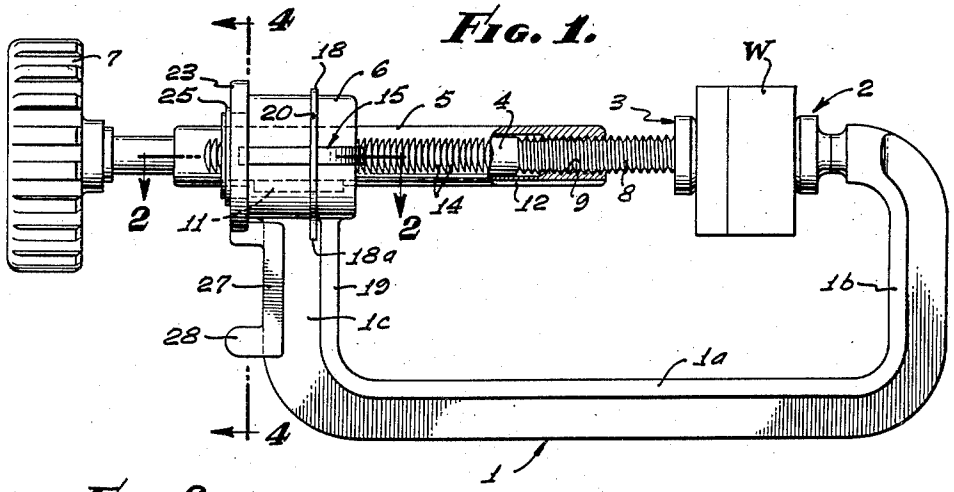

FIG. 2.

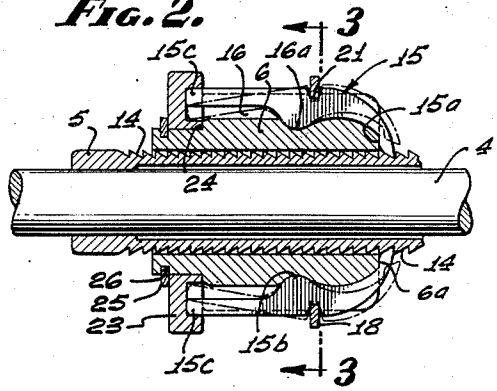

FIG. 3.

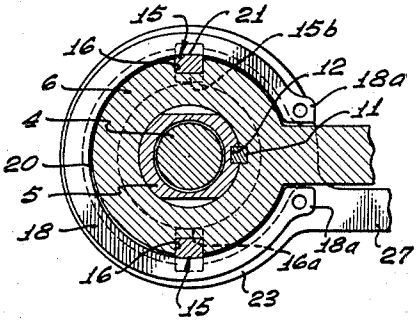

FIG. 4.

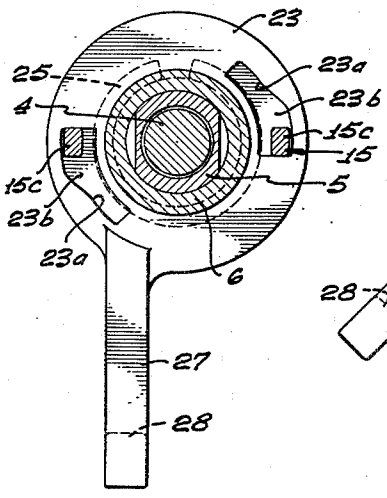

FIG. 5.

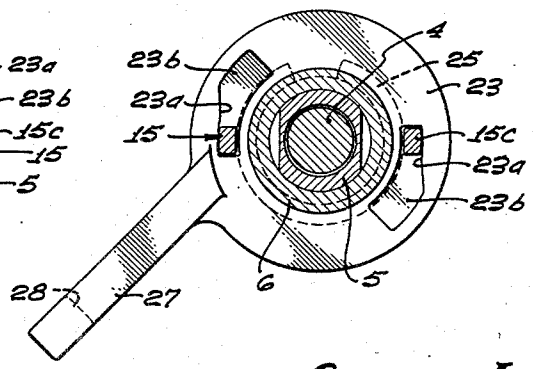

INVENTOR.
CLIFFORD L. HUTSON
BY
Paul A. Wilcin
ATTORNEY.

United States Patent Office 2,812,789
Patented Nov. 12, 1957

2,812,789

QUICK ACTING C-CLAMP

Clifford L. Hutson, Glendale, Calif.

Application December 20, 1954, Serial No. 476,119

3 Claims. (Cl. 144—305)

This invention relates to clamping devices of the C-clamp type.

It is an object of this invention to provide an improved clamping device of this character in which a clamping jaw may be quickly brought into engagement with the work with a free-sliding movement and thereafter tightly clamped responsive to a short screw threaded adjustment thereof.

It is another object of this invention to provide a clamping device such as described, wherein the work may be quickly released and the work clamping jaw as quickly retracted with a free sliding movement.

A further object hereof is the provision of a clamping device such as described which, in one size, is quickly and easily adaptable for holding work over a wide range of sizes.

It is an additional object hereof to provide improved C-clamp embodying the above noted advantageous features.

Another object hereof is the provision of a clamping device of the character described which includes a novel means for holding the movable work clamping jaw against movement in a direction away from the work following the free sliding movement of this jaw against the work, whereby the screw threaded tightening means may be effectively operated to clamp the jaw against the work.

A further object hereof is the provision in a clamp such as described, of a novel means for releasing the means which holds the movable work-clamping jaw against movement in a direction away from the work.

A further object hereof is the provision in a clamp of the character described, of a novel arrangement of the releasing means and the means by which both the sliding and screw threaded adjustments are effected, this arrangement providing for operation of the releasing means with the fingers of the hand which holds the means for effecting the aforesaid movements of the jaw.

This invention possesses many other advantages and has other objects which may be made more easily apparent from a consideration of one embodiment of the invention. For this purpose there is shown a form in the drawings accompanying and forming part of the present specification. This form will now be described in detail, illustrating the general principles of the invention; but it is to be understood that this detailed description is not to be taken in a limiting sense, since the scope of the invention is best defined by the appended claims.

Referring to the drawings:

Fig. 1 is a side elevation partly in section of a clamping device embodying the present invention, showing the jaws clamping work therebetween;

Fig. 2 is an enlarged sectional view taken on the line 2—2 of Fig. 1;

Fig. 3 is a sectional view taken on the plane of line 3—3 of Fig. 2;

Fig. 4 is a sectional view taken on the plane of line 4—4 of Fig. 1, showing the releasing means in the position

in which the pawls are operative to engage the ratchet teeth; and

Fig. 5 is a view corresponding to Fig. 4 showing the releasing means in the position for holding the pawls out of engagement with the ratchet teeth.

As shown in the accompanying drawing, the present invention is embodied in a C-clamp, but it is to be understood that the invention may be embodied in other forms of clamps or similar devices wherein it is desired to provide for movement of a clamping jaw as here shown.

The C-clamp comprises a C-shaped frame **1** formed of a main bar **1***a* and opposed arms **1***b* and **1***c* at opposite ends thereof. Preferably the space between the arms **1***b* and **1***c* is of considerable width and depth whereby work of various sizes may be clamped with the one device, as will be apparent as this description progresses.

On the outer end of the arm **1***b* is a stationary or fixed work clamping jaw **2** such as usually provided in C-clamps. The jaw **2** is adapted to cooperate with a movable jaw **3** for clamping work (designated W in Fig. 1) between the two jaws in a manner which will be hereinafter described.

In accordance with this invention it is desired to provide for a free sliding movement of the movable jaw **3** into and out of work-engaging position without necessitating the screw threaded adjustment usually required in C-clamps and similar devices. In other words, it is desired to thrust the movable jaw **3** quickly against the work and to as quickly retract it. It is also desired that upon movement of the jaw into work engaging position it will be held against retrograde movement whereby the desired final tightening and clamping of the jaw may be effected with but a short screw threaded axial adjustment thereof. These provisions make it possible for a C-clamp, or similar device of one given size, to be used effectively for clamping work over a wide range of sizes.

It is also desired to provide for a quick release of the means which holds the movable jaw against movement in a direction away from the work and to do this with the fingers of the hand grasping the means by which the sliding and screw threaded adjustments are effected.

The means provided in accordance with this invention, whereby the aforementioned desirable operations of the jaw **3** may be effected, will now be described.

As shown in the drawing, the jaw **3** is mounted on one end of a rod **4** extending through a sleeve **5** slidably supported in a tubular bearing member **6** integral with the outer end of the arm **1***c*. A knurled handle **7** is fixed on the other end of the rod **4** and provides for sliding the sleeve **5** and the rod axially whereby the jaw **3** may be quickly moved into and out of work-engaging position. The jaw **3** acts as a stop to limit the retroaction movement of the sleeve **5**.

The rod **4** adjacent the end thereof on which the jaw **3** is mounted, is provided with screw threads **8** engaged with a screw threaded portion **9** of the bore through the sleeve **5**. Thus, upon appropriate turning the handle **7** and the rod, the latter is movable axially relative to the sleeve **5** for tightening the jaw **3** against the work.

The sleeve **5** is held against turning about its axis by means of a key **11** fixed in bore of the bearing member **6** so as to engage in a keyway **12** extending along the exterior of the sleeve.

Means are provided for releasably holding the sleeve **5** and rod **4** against movement in a direction away from the work, whereby the jaw **3** may be tightened and released upon turning the handle **7** and rod **4** relative to the sleeve **5**, this being the screw threaded adjustment of the jaw. Accordingly, the sleeve **5** is provided with ratchet teeth **14** along opposite sides thereof adapted to be engaged by a pair of spring-loaded pawls **15** mounted on the bearing member **6**. The ratchet teeth **14** are provided with square faces and the pawls **15** have similar

surfaces which abut the square faces of the teeth, whereby the sleeve 5 will be positively held against movement in a direction away from the work.

As the pawls 15 are required to hold the sleeve 5 against retrograde movement incident to the tightening of the jaw by the screw threaded adjustment of the rod 4, a considerable load is imposed on the pawls. Accordingly, the pawls are mounted to resist this load. One way, as here shown, to so mount the pawls 15, is to provide them with shoulder portions 15*a* for abutting shoulder portions 6*a* on the bearing member 6 whereby the load is taken by the member 6.

The two pawls 15, as here shown, may be mounted to rock in longiudtinal grooves 16 in the bearing member 6, each pawl having a depending fulcrum portion 15*b* intermediate its ends which rocks in a depression 16*a* formed in the bottom of the associated groove 16. The depth of the grooves 16 is such that the pawls are substantially enclosed therein, with but a portion thereof extending radially from the periphery of the bearing member 6.

The means for spring-loading the pawls 15 as here shown comprises a split and flat spring ring 18 which embraces the pawls and has its ends seated against the flanges 19 on the arm 1*c* beneath the bearing member 6. The bearing member 6 is provided with a circumferential groove 20 in which the spring ring is mounted so as to urge the pawls 15 against the teeth 14. The pawls may also be provided with transverse grooves 21 in which the spring ring is engaged. As the spring ring 18 is flat in cross section and seated in the grooves 20 and 21, it assists in holding the pawls against axial displacement as well as holds the pawls assembled on the bearing member 6 subject to rocking movement in the grooves 16. This spring ring is installed in the manner of a snap ring and is provided with apertured ends 18*a* to facilitate the mounting and removal thereof with a suitable instrument not shown.

Means are provided for releasably holding the pawls 15 in engagement with the ratchet teeth 14 as well as disengaged from the ratched teeth. This means as hereinbefore stated is disposed so that it may be operated by fingers of one hand of the operator while this hand grasps the handle 7, thereby facilitating the clamping and releasing of the jaw 3. This means as here shown, includes a cam ring 23 rotatably mounted on the outer end of the bearing member 6 with its inner side face abutting a shoulder 24 on the bearing member. A flat snap ring 25 seated in a groove 26 in the bearing member 6 abuts the outer side face of the cam ring 23, thereby holding the cam ring 23 against axial displacement from the bearing member 6 while permitting free turning movement thereof relative to the bearing member.

As shown in Figs. 4 and 5, cam surfaces 23*a* are formed in arcuate recesses 23*b* in the inner side face of the cam ring 23. These recesses and cam surfaces are angularly spaced about the axis of the ring so that upon appropriate turning of the ring, the cam surfaces will engage the end portions 15*c* of the pawls 15 and rock the pawls about the fulcrums 15*b* to disengage the pawls from the ratchet teeth 14.

The ends 15*c* of pawls 15 will abut the end walls of the recesses 23*b* to limit the turning movement of the cam ring 23 to the position (see Fig. 4) releasing the pawls for engageemnt with the ratchet teeth 14 as well as the position (see Fig. 5) for holding the pawls out of engagement with the ratchet teeth. The cam surfaces 23*a* are so formed that the recesses 23*b* have narrow end portions and wide end portions as will be seen with reference to Figs. 4 and 5. When the cam ring 23 is in position for disengaging the pawls 15 from the teeth 14, the ends 15*c* of the pawls are disposed in the narrow ends of the recesses, as shown in Fig. 5, thereby holding the pawls disengaged against the action of the spring ring 18. When the cam ring is in the position shown in Fig. 4, the ends 15*c* of the pawls 15 are in the wider ends of the recesses 23*b*.

In all positions, the cam ring 23 acts as a stop to prevent axial displacement of the pawls 15, as the outer ends of the pawls are disposed in such close proximity to the bottoms of the recesses 23*b* in the ring, that any slight movement of the pawls move in a direction away from work will be checked by the cam ring.

Appropriate turning movement of the cam ring 23 is afforded by means of a handle 27 which extends from the ring so as to be disposed on the right side of the frame arm 1*c* whereby it may be actuated by fingers of the hand holding the knurled handle 7. This handle normally lies for the most part along the arm 1*c*, only the finger piece 28 on the free end thereof projecting outwardly from this arm.

It should be noted that the pawl and ratchet arrangement assures that the jaw 3 quickly and easily may be moved against the work and will be held against retrograde movement from any position into which it is intentionally moved toward or against the work, whereby the rod 4 may be turned to effect the screw threaded adjustment of the jaw 3 into tight clamping engagement with the work.

Also it is important to note that when it is desired to release the jaw 3 and retract it quickly, the operator without releasing his hand from the knurled handle 7, may with fingers of this hand readily reach the cam ring handle 27 and turn the cam ring 23 so as to disengage the pawls 15 from the teeth 14. As readily the cam ring may be actuated to allow the pawls to engage the teeth 14.

I claim:

1. In a clamp, a frame; a bearing on said frame; a sleeve axially adjustably supported by said bearing; a rod extending through said sleeve and threadedly engaged therewith for axial adjustment relative thereto; a work-engaging jaw on said rod; ratchet teeth on said sleeve; said bearing having grooves extending axially thereof; pawls mounted in said grooves with corresponding ends thereof disposed for movement into and out of engagement with said teeth; said teeth and said pawls preventing movement of said sleeve in a direction away from the work; each of said pawls having a fulcrum portion seated on the bottom of the associated groove; said bearing having a groove therein intersecting said axially extending grooves; a split spring ring mounted in said intersecting groove in surrounding relation to said pawls and said bearing to hold said pawls in said groove subject to rocking movement on said fulcrum portions; said pawls having grooves therein in which said spring ring is engaged; said grooves in said pawls being located between said corresponding ends and said fulcrum portions; a cam ring mounted to rotate on and around said bearing in engagement with said pawls; and cam elements on said cam ring engaged with said pawls and operable for rocking said pawls out of engagement with said teeth upon rotation of said cam ring.

2. In a clamp, a frame; a bearing on said frame; a sleeve slidable on said bearing; a rod carried by said sleeve; a work-engaging jaw on said rod; ratchet teeth on said sleeve; said bearing having a slot exteriorly thereof; a pawl in said slot; said pawl having a fulcrum portion between its ends engaged with the bottom of said slot to provide for rocking of the pawl to move one end of the pawl into and from engagement with said teeth; a split ring spring held in embracing relation with said bearing by the inherent resiliency thereof; said spring ring being engaged with said pawl at a point between said one end of the pawl and said fulcrum portion to hold said pawl in said slot and urge said one end of the pawl against said teeth; and cam means mounted on said bearing in engagement with the other end of said pawl and operable to move said pawl out of engagement with said teeth.

3. In a clamp, a frame; a bearing on said frame; a sleeve slidable on said bearing; a rod carried by said

sleeve; a work-engaging jaw on said rod; ratchet teeth on said sleeve; said bearing having slots exteriorly thereof; pawls in said slots; said pawls having fulcrum portions between their ends engaged with the bottoms of said slots to provide for rocking of the pawls to move corresponding ends of the pawl into and from engagement with said teeth; said ends of said pawls being extended beyond one end of said bearing; said end of said bearing having shoulders thereon engageable by said pawls when said pawls are engaged with said teeth; said bearing having a groove extending circumferentially of the exterior thereof; a split spring ring mounted in said circumferentially extending groove so as to overlie said pawls and hold them in said grooves; said pawls having transverse grooves therein between said fulcrum portions and said corresponding ends of the pawls; said spring ring being mounted in said transverse grooves; and a cam ring mounted on the other end of said bearing for rotative movement; said cam ring having cam portions which embrace the other ends of said pawls and are operable to

rock the pawls for moving the pawls out of engagement with said teeth.

References Cited in the file of this patent

UNITED STATES PATENTS

243,978	Rominger	July 5, 1881
669,904	Sibert	Mar. 12, 1901
768,761	Larson	Aug. 30, 1904
786,788	Hudson	Apr. 4, 1905
1,357,935	Argetsinger	Nov. 9, 1920
1,429,050	Sylvester	Sept. 12, 1922
1,445,344	Moltrup	Feb. 13, 1923
1,749,491	Kokay	Mar. 4, 1930
2,405,018	Crowley	July 30, 1946
2,408,801	Miller	Oct. 8, 1946

FOREIGN PATENTS

615,047	Great Britain	Dec. 31, 1948