June 30, 1970 C. V. COGDILL 3,518,421

HANGER STRUCTURE

Filed Oct. 18, 1967

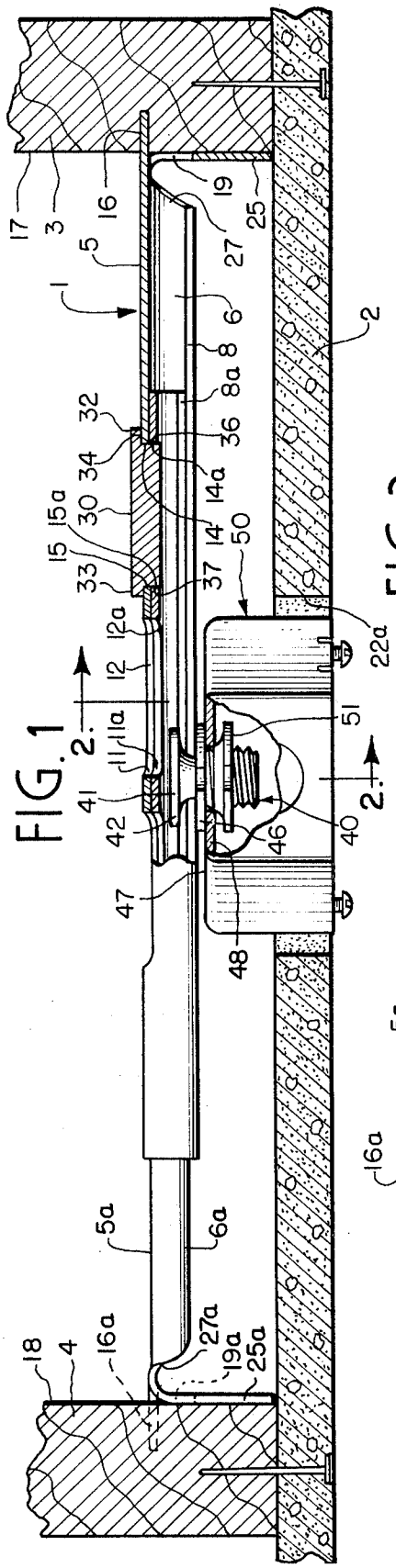

FIG. 1

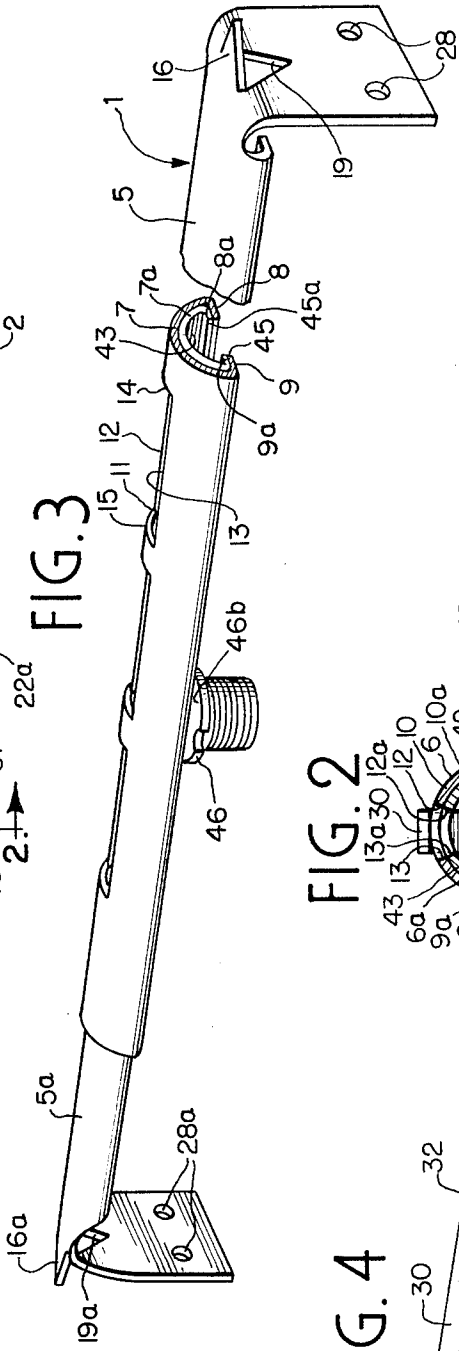

FIG. 3

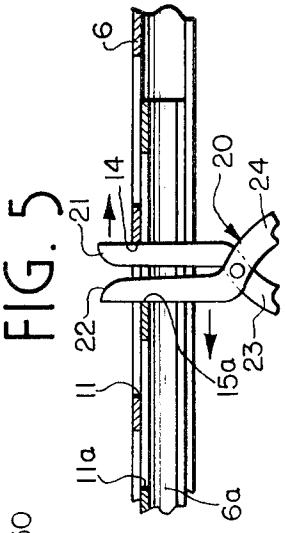

FIG. 5

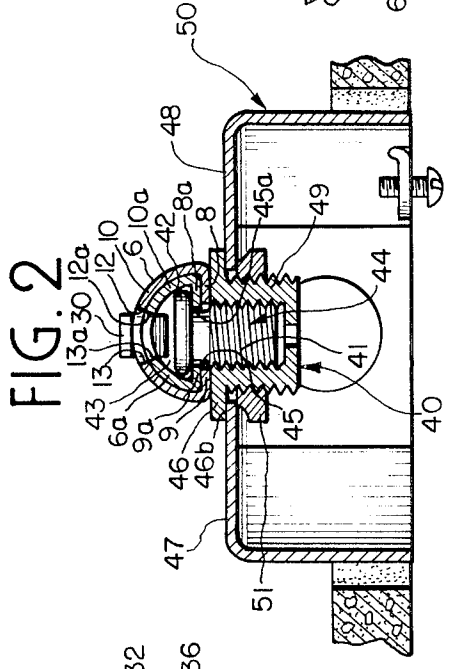

FIG. 2

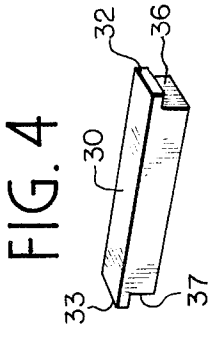

FIG. 4

Inventor

Cletus V. Cogdill

By John J. Konalik

Attorney

United States Patent Office 3,518,421 Patented June 30, 1970

3,518,421

HANGER STRUCTURE

Cletus V. Cogdill, 3650 N. Marshfield Ave., Chicago, Ill. 60613

Filed Oct. 18, 1967, Ser. No. 676,154
Int. Cl. F21v 21/22
U.S. Cl. 240—85 1 Claim

ABSTRACT OF THE DISCLOSURE

A hanger for mounting between a pair of building beams in normally inaccessible places. The hanger has telescoped elements with pointed ends which are adapted to pierce into the beams when the elements are spread apart by a spreading tool which is inserted into slots in the elements. After the elements are spread apart by the spreading tool a locking block is inserted in the slots to prevent accidental withdrawal of the pointed ends by preventing sagging of the hanger when supporting a heavy fixture. The hanger has brackets at opposite ends of the elements for normal affixation to the beams when accessible and the brackets serve as reaction members in conjunction with the locking block to hold the points in the beams.

Cross references: This application is a companion application to my copending application Ser. No. 631,025 filed Apr. 14, 1967, now Pat. No. 3,425,655.

BACKGROUND OF THE INVENTION

The mounting of hangers for electrical fixtures has heretofore posed a serious problem in inaccesible locations. The opening in the wall or ceiling through which the hanger is to be inserted into mounting position is usually limited to the dimensions of the junction box and it is virtually impossible to nail the usual hanger in place.

It is a principal object of the invention to provide a novel hanger which is relatively easy to secure through a small access opening between a pair of building joists or beams.

A further object of the invention is to provide a novel hanger which has a pair of telescoping channel sections with registering elongated slots therein for reception of a spreading tool, the sections having pointed distal ends which are adapted to pierce into the opposed joists between which the hanger is to be mounted.

Another object is to provide a novel latch for holding the channels extended whereby to prevent the pointed end from withdrawing from the beams.

Another object is to provide a latch which serves as a compression element whereby to stiffen the channels and prevent their sagging.

The invention contemplates a hanger having end brackets for nailing into the joists in installations where feasible, the brackets serving with the compression latch to prevent the channels from sagging and thus disconnecting from the beams.

These and other objects and advantages inherent in and encompassed by the invention will become readily apparent from the specifications and the drawings, wherein:

FIG. 1 is a vertical sectional view of a building ceiling structure with the invention applied thereto and shown partly in longitudinal section;

FIG. 2 is an enlarged crosss-ectional view taken essentially on line 2—2 of FIG. 1;

FIG. 3 is a perspective view of my novel hanger;

FIG. 4 is a perspective view of the latching block, and

FIG. 5 is a longitudinal section on a smaller scale showing the spreader tool applied thereto.

DESCRIPTION OF THE INVENTION

Describing the invention in detail and having a particular reference to the drawings, there is shown my novel hanger generally designated **1** mounted above a ceiling **2** of a building which included spaced joists **3, 4** supporting the ceiling. It will be realized that these joists are normally spaced 12" or 16" apart and the hanger comprises a pair of telescoping sections **5** and **5***a* which are adapted to be spread apart between the beams and are of sufficient length to have considerable overlap even in maximum operational extension.

It will be apparent that the sections **5, 5***a* are substantially identical except they are right and left hand (so designated for purposes of clarity) and the channel portion **6** is dimensioned larger than the portion **6***a* which slides within portion **6**. Thus corresponding parts will be identified by the same numeral except that the parts of section **5***a* will be identified by the suffix *a* after the numeral.

The channel **6** has a wall segment **7** arcuate in cross section which defines the top and sides of the channel and a pair of inturned coplanar flanges **8, 9** are integrally formed on the free edges of the segment **7**. The inner channel **6***a* has a wall **7***a* which is complemental to wall segment **7** and has a pair of inturned flanges **8***a*, **9***a* which slide upon flanges **8, 9** respectively.

The upper portion **10** (so designated for purposes of orientation only in the following description) is provided with elongated slots **11, 11** each of which has generally parallel side edges **12, 13** which extend lengthwise of the channel and the ends of the slots are defined with transverse flat margins **14, 15**. These slots are located in positions such that they will be only out of registry with identical slots **11***a* in the top wall **10***a* of the inner channel a distance equal to the sum of the lengths of the points **16, 16***a* formed on the distal ends of channels **6, 6***a* when such points are in contact with the surfaces **17, 18** of the joists **3, 4**.

Thus upon application of a spreading tool **20** to the channels **6, 6***a* as best seen in FIG. 5, one leg **21** of the tool abuts edge **14** of slot **11** and the other leg **22** engages the edge **15***a* of the slot **11***a*, said slots being in position in substantial alignment with the access hole **22***a* in the ceiling.

Upon compressing the handles **23, 24** of tool **20**, the points **16, 16***a* are caused to penetrate the wood beams **3, 4** and the penetration continues until the external sides **25, 25***a* of the end brackets **26, 26***a*, which are formed integrally on the outer ends **27, 27***a* of the sections **6, 6***a* bear tightly against the confronting faces **17, 18** of the building beams.

It will be noted that the points **16, 16***a* are cut out of the brackets **26, 26***a* and form triangular shaped apertures therein.

The end brackets **26, 26***a*, which are generally flat plates with nail holes **28, 28** and **28***a*, **28***a* therein and under normal circumstances would be nailed to the joists, serve as stops and provide a slight resilient spring back such as will cause the compression locking block **30** to be held tightly between the edges **14, 15***a* so that it will not readily fall out and serve as beam loading means.

The block **30** is of rectangular form and has lateral dimensions such as will fit between surfaces **12, 13** of slot **11** and **12***a*, **13***a* of the registering slot **11***a*. The block **30** is T-shaped in side elevation and has end flanges **32, 33** which extend over the upper edge **34** of the channel section **7** beyond the margins **14, 15**. The block is insertable endwise through registering slots **11, 11***a* and the lower shorter portion of the body of the block is lowered into companion slots **11, 11***a* and the edges **36, 37** of the block snugly fit against the edges **14, 14***a* and

15, 15*a* respectively of the slots 11, 11*a*. This is accomplished while the tool is spreading the channels. If this is not feasible because of limited space, then, a slightly shorter block is used upon the tool being withdrawn. The eventual spring back will cause the channels to retract and thus effectively lock against the ends of the shorter block.

It will be realized that the end brackets 26, 26*a* serve in this structure as fulcrums or reaction members in resisting downward bowing of the channels in supporting a fixture (not shown) intermediate their ends, which fixture would be carried from a mounting assembly 40 comprising a bolt 41 having a head 42 fitted into the cavity 43 within the inner channel 6*a*, the shank 44 of the bolt extending through the aligned slots 45, 45*a* (FIG. 2) of the channels 6, 6*a* and the head 42 bearing against the upper sides of the flanges 8*a*, 9*a*. A nut 46 is threaded on shank 44 and is tightened against the undersides of the flanges 8, 9 of channel section 7. Thus the mounting nut and bolt is adjustable lengthwise of the hanger whereupon the nut is tightened then in place. The shank extends into a threaded portion of the nut 46 which has a shoulder 46*b* which bears against the upper side 47 of the top wall 48 of a junction box 50 located in the opening 22*a*. The shank and nut portion 49 extend below wall 48 through an aperture 50' in wall 48 and a locking nut 51 is then threaded on portion 49 against the underside of the wall 48.

It will be readily noted that a novel and effective hanger structure has been provided. The parts cooperate in a novel and effective manner to retain the hanger in tight assembly with the beams and to sustain an adequate weight. The novel hanger is easy to apply either in difficult locations or in normal installation. The locking block not only holds the sections from removing accidentally but also rigidifies the construction and serves as a load transfer member between the two channels.

It will be understood that the preferred embodiment of the invention has been disclosed and that various other forms thereof will now become readily apparent to those skilled in the art within the scope of the appended claims.

I claim:

1. A hanger for mounting between a pair of normally inaccessible spaced beams comprising a pair of telescoping sections, each section being generally U-shaped in cross-section and each having a pair of inturned lower flanges in interlocking engagement with each other, each section having an upper wall portion with a plurality of spaced slots elongated lengthwise of the section, each slot defined by side edges extending lengthwise of the section and end edges extending transversely of the section, each section having a transversely extending end flange for engagement with the adjacent beam, a sharp pointed spur struck from each end flange at the juncture thereof with the related section and extending outwardly therefrom in longitudinal alignment therewith, said slots in one section being in partial registry with respective slots in the other section in the extended unsecured position of the hanger between said beams, said slots adapted to receive a spreader tool therein between the end surface of a selected one of the slots in one section and an opposed end edge of the registering slot in the other section, said tool adapted to spread the sections apart to cause the spurs to penetrate into the beams for securing the hanger thereto, and a locking element insertable into registering slots of said sections after the same are spread apart and secured to the beams and comprising a block fitting into the registering slots and having ends in engagement with the opposed end edges, and said block having means interlocking with said sections to prevent its accidental disengagement with the sections.

References Cited

UNITED STATES PATENTS

420,486	2/1890	Wyant	211—105.3
2,509,521	5/1950	Pegram	211—105.4 X
2,725,989	12/1955	Burkey	211—105.4

FOREIGN PATENTS

671,289	10/1963	Canada.

NORTON ANSHER, Primary Examiner

M. H. HAYES, Assistant Examiner

U.S. Cl. X.R.

211—105.3; 248—264