June 14, 1938. C. F. HOFFMAN 2,120,783

SLIDING DOOR AND FRAME CONSTRUCTION

Filed Dec. 18, 1937 2 Sheets-Sheet 1

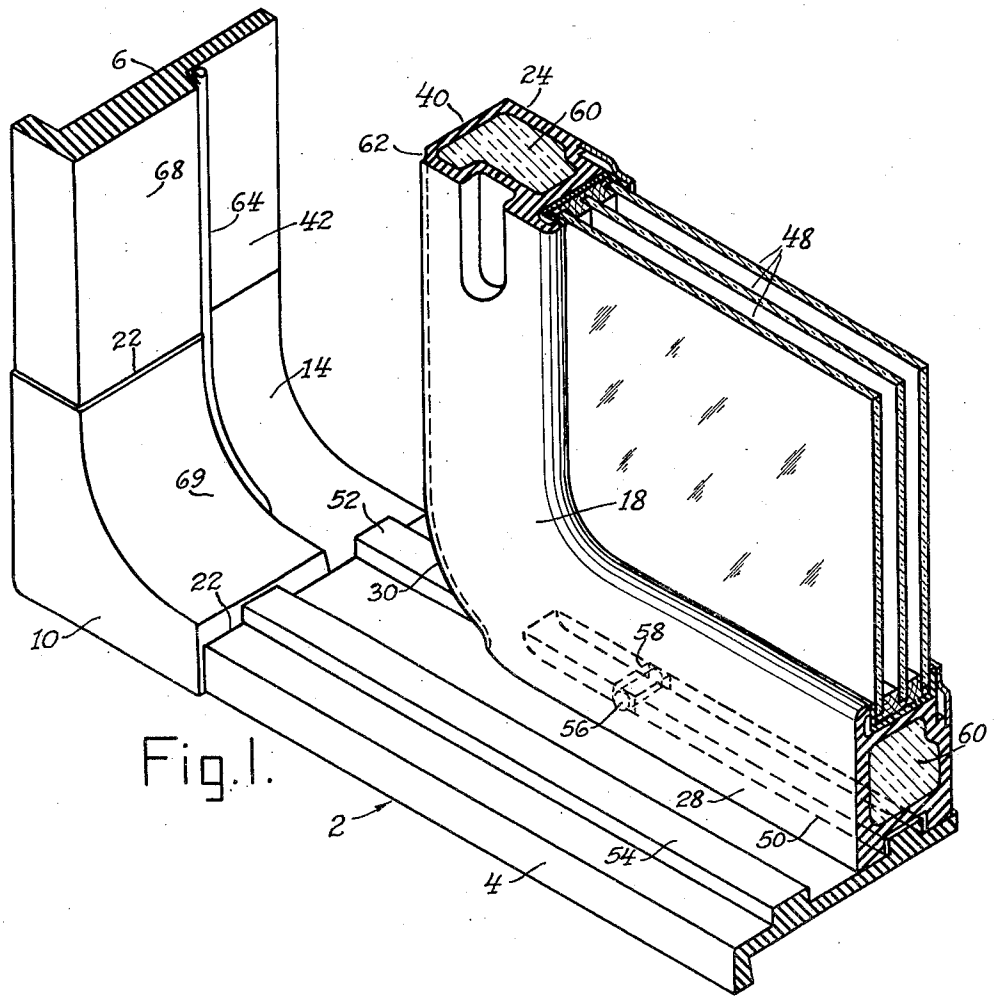

Fig. 1.

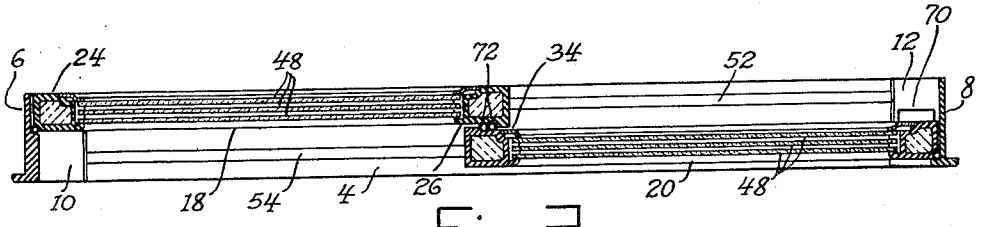

Fig. 2.

INVENTOR
CYRUS F. HOFFMAN
BY Albert Sperry.
ATTORNEY

June 14, 1938. C. F. HOFFMAN 2,120,783

SLIDING DOOR AND FRAME CONSTRUCTION

Filed Dec. 18, 1937 2 Sheets-Sheet 2

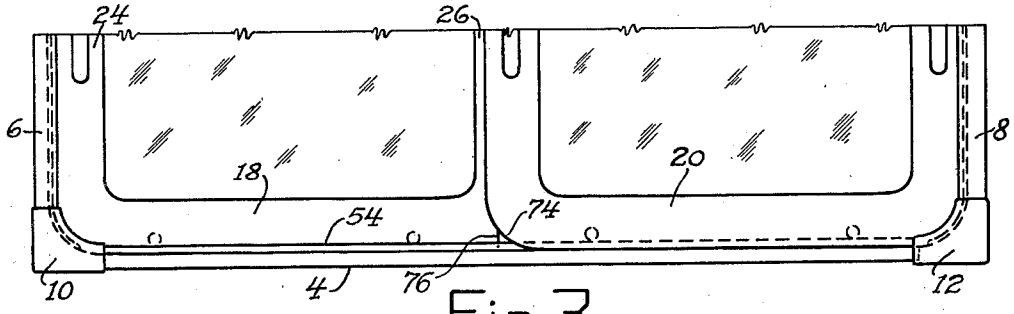

Fig. 3.

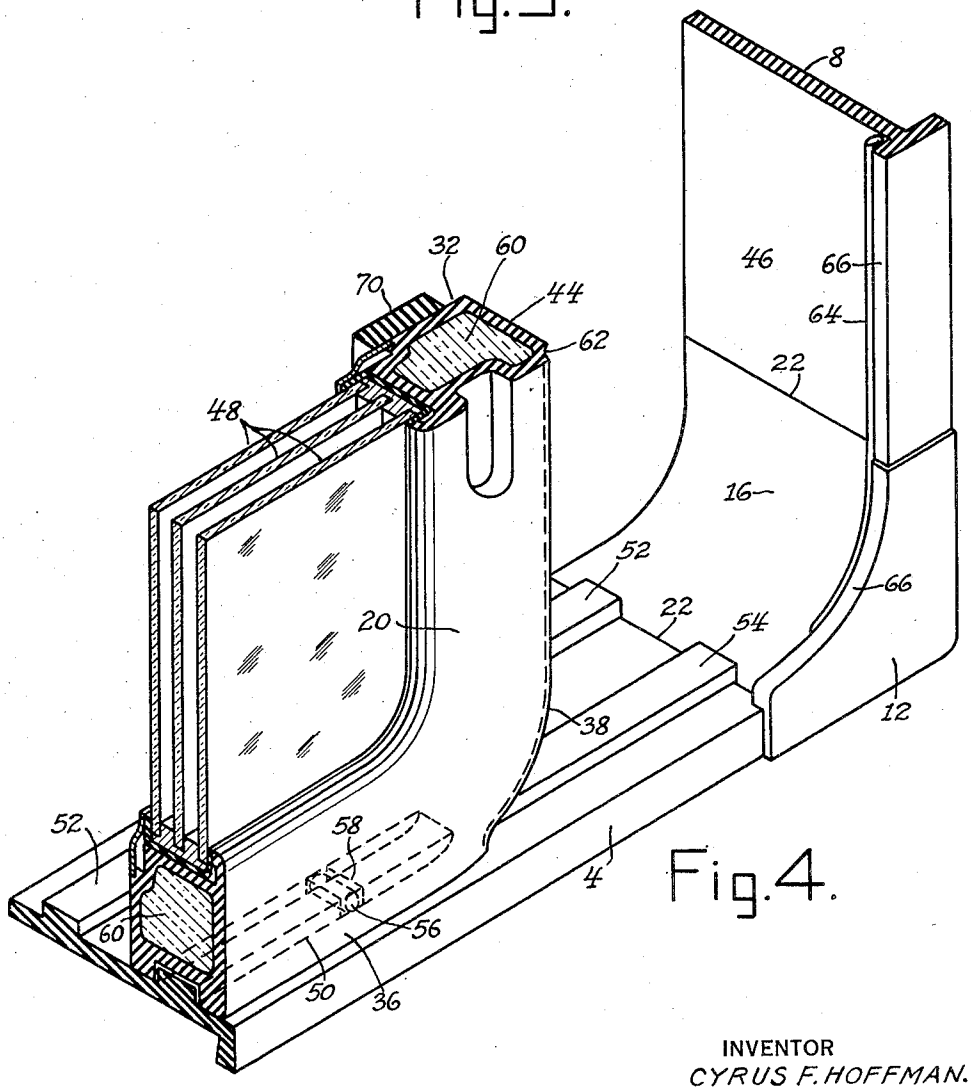

Fig. 4.

INVENTOR
CYRUS F. HOFFMAN.
BY Albert Sperry.
ATTORNEY

Patented June 14, 1938 2,120,783

UNITED STATES PATENT OFFICE

2,120,783

SLIDING DOOR AND FRAME CONSTRUCTION

Cyrus F. Hoffman, Trenton, N. J., assignor to C. V. Hill & Company, Incorporated, Trenton, N. J., a corporation of New Jersey

Application December 18, 1937, Serial No. 180,568

6 Claims. (Cl. 20—19)

This invention relates to sliding doors and associated constructions and particularly to the sliding doors used on refrigerated display cases and the like.

The sliding doors used on refrigerated display cases heretofore have always been constructed with the lower corners thereof square and have been supported on a rail which meets a jamb for the door at right angles. Such constructions are objectionable because crumbs of food, dirt and other material falling into the track along which the door slides are forced against the jamb when the door is closed and into the sharp transversely extending corner where the track meets the jamb. Such material when packed into the corners and crevices about the door and in the frame and track for the door cannot always be removed so that it is difficult if not impossible to maintain the case in a clean, sanitary condition. Moreover, the presence of material in the corners adjacent the jamb frequently prevents the door from closing properly so that leakage of cold air occurs about the door, and condensation of moisture takes place along the door jambs, running down into the corners and aggravating the undesirable and unsanitary conditions.

In accordance with the present invention these objections to constructions of the prior art are overcome by providing the door and the door frame which it engages with rounded corners which facilitate cleaning of the corners and eliminate packing of material into corners where it is difficult to remove or will prevent proper closing of the door. Furthermore the rails on which the door slides terminate short of the vertical portion of the jamb so that clean unobstructed surfaces are provided and no sharp transversely extending corners are presented.

The principal objects of the present invention are to overcome the tendency for dirt and the like to accumulate in the corners of sliding door constructions, to insure proper sealing of the doors and to provide a construction which may be readily cleaned and maintained in a sanitary condition. These and other objects and features of my invention will appear from the following description thereof in which reference is made to the accompanying figures of the drawings.

In the drawings:

Fig. 1 is a perspective of one corner of a sliding door and mounting therefor embodying my invention showing the frame and the inner one of a pair of sliding doors with parts thereof broken away to illustrate the construction in horizontal and vertical section.

Fig. 2 is a horizontal sectional view looking downward on a pair of sliding doors embodying my invention.

Fig. 3 is a rear elevation of the lower portion of the doors illustrated in Fig. 2, and

Fig. 4 is a perspective of the corner of the frame opposite to that shown in Fig. 1 with the outer door and frame broken away to show these elements in vertical and horizontal section.

In that form of my invention illustrated in the figures of the drawings, a structure having a door opening therein is provided with a door frame indicated generally at **2** and including a lower sill or track carrying portion **4** and vertically extending jamb portions **6** and **8** at the opposite ends of the track carrying portion of the frame. Corner portions **10** and **12** presenting rounded inner surfaces **14** and **16** respectively serve to connect the track carrying portion **4** of the frame with the jamb portions **6** and **8** at the opposite ends of the frame and to provide smooth sweeping curved surfaces free from abrupt transversely extending corners or angles. The corner portion **10** is located at the left hand end of the track carrying portion of the frame as seen in Figs. 2 and 3 and is engageable by the left or inner door **18**, whereas, the corner portion **12** is located at the right hand end of the track carrying portion **4** of the frame and is engageable by the right or outer door **20**.

I prefer to form the frame with the track carrying portion **4**, the jamb portions **6** and **8** and the corner portions **10** and **12** each constructed as a separate element, since these parts can be produced separately at considerably less expense than when the frame is formed as a single integral piece. This is particularly true when, as preferred, the frame is formed of hard rubber or other moulded material. When so formed expansion members **22** are located between the members from which the frame is built up to allow for expansion and contraction thereof without destroying the seal between the members.

The inner door **18**, a corner of which is shown in Fig. 1 is formed with a vertical jamb engaging end **24** and opposite or central vertical end **26** and a lower side or bottom **28**. The corner **30** of the door which is adjacent the jamb engaging end **24** thereof is rounded, as shown, to engage or to fit closely adjacent the inner rounded surface **14** of the corner portion **10** of the frame. The outer door **20**, a corner of which is shown in Fig. 4, is similarly constructed with

a vertical jamb engaging end 32, a central end 34, a lower end 36 and a rounded corner 38 formed to engage or to fit closely adjacent the rounded surface 16 of the corner portion 12 of the frame.

The jamb engaging end of the inner door is provided with a face 40 which presents a plane surface adapted to engage or fit closely adjacent the plane vertical surface 42 of the jamb portion 6 of the frame. Similarly the outer door 20 is provided with a face 44 which presents a plane surface adapted to engage or fit closely adjacent the plane vertical surface 46 of the jamb portion 8 of the frame. The lower portions of the surfaces 40 and 44 on the doors merge into the rounded surfaces 30 and 38 at the corners of the inner and outer doors respectively, whereas, the lower portions of the surface 42 and 46 of the jamb portions of the frame merge into the rounded inner surfaces 14 and 16 of the corner portions 10 and 12 of the frame respectively. Thus each of the surfaces of the doors and frame portions engaged thereby is so constructed as to avoid any sharp transversely extending corners or angles which would tend to accumulate dirt and render the case unsanitary and a construction is provided which is smooth and capable of being cleaned very readily and which insures proper sealing of the doors when closed.

The upper portions of the frame and of the doors are not illustrated since they may be of any suitable or conventional constructions and form no part of the present invention. However, I prefer to form the upper portion of the frame and doors, as shown and described in my copending application, Serial No. 180,567, filed December 18, 1937. The doors are each provided with multiple glass panes 48 secured in place by suitable means such as those shown and described in the issued patent to C. V. Hill No. 1,867,074 dated July 12, 1932.

The lower side of each door is recessed at 50 to receive and engage a track formed on the lower track carrying portion 4 of the frame. The inner door 18 is movable along an inner track 52, whereas, the outer door 20 moves along a parallel outer track 54. Rollers 56 are carried by U shaped brackets 58 set into the recesses 50 in the lower edges of the door to engage the tracks 52 and 54 so that the doors may be moved readily into and out of their closed positions.

The doors preferably are also formed of hard rubber and may be provided with an inner core 60 formed of heat insulating material, as shown and described in the issued patent to C. V. Hill No. 1,769,951.

The outer corner of the jamb engaging end of each door is bevelled or recessed at 62 to engage a yieldable sealing strip 64 carried by the jamb portions of the frame. As shown in Fig. 4 the sealing strip carried by the jamb portion 8 of the frame serves to seal the space between the outer door and the jamb portion and is concealed and supported by a bead 66 projecting inward from the adjacent surfaces 46 and 16 of the jamb portion 8 and corner portion 6 is concealed and supported by the inner edge of the surface 68 adjacent the face 42 and the surface 14 of the jamb portion 6 and corner portion 10 of the frame.

The outer track 54 on the portion 4 of the frame may be extended, as shown, into contact with the portion 69 of the corner portion 10 of the frame, whereas, the opposite end of the outer track terminates short of the vertically extending jamb 8 of the frame. The inner track 52 terminates at the corner portions 10 and 12 at each end thereof. It should be noted that the transversely extending corner where the outer track abuts the portion 69 of the corner 10, although it extends transversely of the frame, is not at any time engaged by the outer door even when the outer door is moved to its extreme opened position. Movement of the outer door in opening the same is limited by a bumper 70 carried by the jamb engaging end 32 of the outer door 20 and positioned to engage the central end 26 of the inner door 18. The bumper also serves to prevent the inner door from being opened to such an extent that the lower corner of the central end thereof will engage the corner portion 12 at the opposite end of the frame. With this construction, packing of matter into the corner at the end of the outer track 54 and adjacent the corner portion 10 is prevented and the construction therefore may be maintained in a clean, sanitary condition at all times.

As shown in Figs. 2 and 3 of the drawings, the doors preferably are arranged in pairs and are slidable longitudinally of the frame on the tracks carried by the lower track portion 4 of the frame. When in closed position the central vertical end 26 of the inner door and the central vertical end 34 of the outer door are located adjacent each other. Sealing strips 72 are carried by each door, that on the outer door being on the inner face thereof and that on the inner door being on the outer face thereof, so that the strips are brought into engagement to seal the space between the doors when the doors are moved to their closed positions.

The lower corner of the outer door adjacent the central end 34 thereof is rounded as shown at 74 to correspond in appearance to the opposite lower corner 38 of the door. However, the corner is formed with a tongue 76 extending downward adjacent the inner end of the sealing strip 72 on the inner face of the door. The tongue 76 also serves to prevent the pinching of fingers or clothing between the rail and door as the door is slid along the track. Moreover, if the bumper 70 should be removed or destroyed the tongue 76 will engage the raised edge of portion 69 of the corner 10 and prevent injury to the corner portion on opening the door to the limit of its movement.

The construction described while of general application is particularly adapted for use on refrigerated display cases wherein it is desired to maintain a sanitary condition and to prevent improper sealing of the doors on closing thereof. The material of which the doors are made and the form and arrangement of the elements may of course be varied as desired to adapt the invention to any desired construction. It should therefore be understood that the form of the invention illustrated and described is intended to be representative thereof and is not intended to limit the scope of the invention.

I claim:

1. In a construction having a door opening therein, a door frame in said opening provided with a vertically extending jamb portion and a horizontally extending track portion joined by a rounded corner portion, and a door slidably movable along said track portion into and out of engagement with said jamb portion, said door having the lower corner thereof rounded to fit closely adjacent the rounded corner portion of said frame when said door is in closed position.

2. In a construction having a door opening

therein, a door frame in said opening provided with a vertical jamb portion and a horizontal track portion joined by a rounded corner portion, track on said track portion terminating short of said jamb portion leaving said rounded corner portion substantially free from obstructions whereby it may be readily cleaned, and a door slidable along said track into and out of engagement with said jamb portion, said door having a lower corner rounded to fit closely adjacent the rounded corner portion of said frame.

3. In a construction having a door opening therein, a frame in said opening having a lower horizontally extending track portion with vertically extending jamb portions at opposite ends thereof connected to said track portion by rounded corner portions, parallel longitudinally extending tracks on said track portions terminating short of said jamb portions leaving said rounded corner portions substantially free from obstructions for ready cleaning thereof, and doors slidable along said tracks formed with rounded corners to fit closely adjacent the rounded corner portions of said frame on movement of said doors into engagement with said jamb portions.

4. In a construction having a door opening therein, a frame in said opening having a lower horizontally extending track portion with vertically extending jamb portions at the opposite ends thereof connected to said track portion by rounded corner portions, spaced longitudinally extending tracks on said track portion and doors slidably movable along said tracks into and out of engagement with said jamb portions, said doors each having a lower corner thereof rounded to fit closely adjacent a rounded corner portion of said frame on movement in one direction into engagement with one of the jamb portions and means on said doors to limit movement of said doors in the opposite directions toward the other jamb portions.

5. In a construction having a door opening therein, a frame in said opening having a lower track carrying portion, upwardly extending jamb portions at the opposite ends of the track carrying portion and corner portions presenting smooth inner curved surfaces merging into surfaces on the track carrying portion and jamb portions of the frame, doors slidably movable longitudinally of the track carrying portion of said frame into and out of closed positions, said doors and frame having complementary surfaces thereon which lie closely adjacent when the doors are in their closed positions, and means engageable by said doors on movement thereof into opened positions to prevent engagement thereof with the curved portion of said frame remote from that jamb engaged thereby when the door is closed.

6. In a construction having a door opening therein, a frame in said opening having a lower track carrying portion with upwardly extending jamb portions at opposite ends thereof, a plurality of tracks extending longitudinally of the track carrying portion of said frame and doors movable in overlapping relation along said tracks into and out of engagement with the jamb portions of said frame, said doors each having a surface thereon extending throughout that part thereof which lies adjacent the track carrying portion of the frame and adjacent the lower part of the jamb portions of said frame when the door is in closed position, which surface is unbroken by sharp corners extending transversely thereof, and cooperating means on said frame and doors positioned to be engaged when the doors are in their closed positions for sealing the space between said doors and between the doors and the frame.

CYRUS F. HOFFMAN.