Aug. 12, 1924. 1,504,433

M. F. CORSWANDT

NEEDLE SILENCER FOR TALKING MACHINES

Filed April 18, 1924

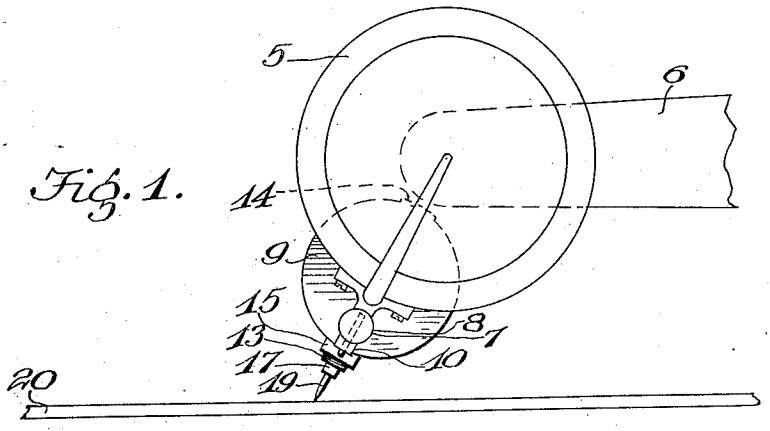

Fig. 1.

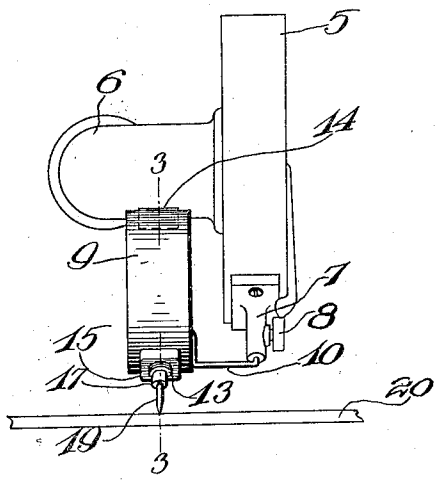

Fig. 2.

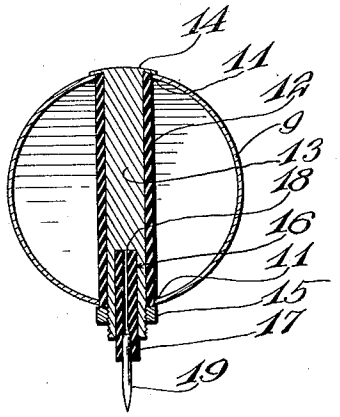

Fig. 3.

Inventor:-

M. F. Corswandt.

By Miller B. Stevens & Co,

Attorneys.

Patented Aug. 12, 1924. 1,504,433

UNITED STATES PATENT OFFICE.

MORITZ F. CORSWANDT, OF CHICAGO, ILLINOIS.

NEEDLE SILENCER FOR TALKING MACHINES.

Application filed April 18, 1924. Serial No. 707,491.

To all whom it may concern:

Be it known that I, MORITZ F. CORSWANDT, a citizen of the United States, residing at Chicago, in the county of Cook and State of Illinois, have invented new and useful Improvements in Needle Silencers for Talking Machines, of which the following is a specification.

This invention relates to talking machines, and more particularly to the reproducing element thereof, its object being to eliminate the noise produced by the friction of the needle with the surface of the record.

The above object is attained by interposing a silencing device between the reproducer and the needle, which deadens or absorbs the scratching noise usually accompanying a talking machine rendition.

Another object of the invention is to provide a device of the above kind which filters the sounds reproduced, making them smooth and mellow.

A further object of the invention is to provide a device which may be quickly attached to or removed from machines of the prevalent type, and requires no skill in that connection.

A still further object of the invention is to design the novel device with such simplicity that it may be manufactured at trifling cost.

With the above objects in view, the invention embodies a novel arrangement and combination of parts to be described and claimed hereinafter, reference being had to the accompanying drawing, in which—

Figure 1 is an elevation of the novel silencer as applied to a talking machine reproducer of standard design;

Figure 2 is an edge view of the showing in Figure 1, taken from the left; and

Figure 3 is an enlarged section of the silencer, taken on the line 3—3 of Fig. 2.

Referring specifically to the drawing, 5 denotes a disk-type talking machine producer of standard type, the tone arm being shown at 6, the needle-socket at 7, and the fastening screw at 8.

The novel silencer is mainly in the form of a small drum 9 positioned at one side of the reproducer 5 and carrying a U-shaped stem or wire 10, which is insertible into the needle-socket 7 to be clamped therein like the ordinary needle. Through the agency of the stem 10, the silencer is attached to and supported by the reproducer 5.

The drum 9 is of thin metal, and its periphery is perforated as at 11 at diametrically-opposite points to receive a rubber tube 12 across the interior of the drum, the ends of the tube being flush with such periphery. Into the tube, a bolt 13 is directed from above, the head 14 thereof being made thin to take up little room and not appear conspicuous. At the lower end or where it emerges from the tube 12, the bolt is threaded to receive a nut 15, whereby the tube and bolt are secured to the drum.

Into the lower end of the bolt 13 is drilled a bore 16 to receive a rubber tube 17, whose walls are so thick that only a narrow center bore 18 is left. A talking machine needle 19 of standard design is backed into this bore with sufficient pressure to firmly lodge the butt-end of the needle in the tube 17.

The device is now ready for use on a disk or other suitable record 20, as shown in Figures 1 and 2. In action, vibrations transmitted to the needle by the contour of the record grooves will be carried through the tube 17, bolt 13 and tube 12 into the drum 9, where they will be amplified. The drum will in turn, transmit these vibrations to the reproducer 5 through the agency of the stem 10 and the needle-socket 7. The vibrations, in passing through the rubber elements 17 and 12, are filtered, resulting in more rounded tones, elimination of din and harshness, and clear rendition. The sounds produced at the point of the needle—from friction in the record groove—which are usually transmitted and amplified into scratching and hissing noise—are through the use of the novel silencer eliminated. These sounds are deadened in part by the tube 17 and more completely by the tube 12, so that they are absorbed by the silencer and do not enter the reproducer.

The device being of comparatively simple construction, and not requiring scientific precision, can be cheaply manufactured and sold, so as to be within the reach of all who own inexpensive as well as more elaborate talking machines.

I claim:

1. A needle silencer comprising a drum, a stem projecting from the latter and adaptable to the needle-socket of a talking machine reproducer, a resilient tubular bearing inside the drum, a bolt to secure the bearing to the drum and having a recess, and a

resilient needle-receiving socket lodged in said recess.

2. A device of the class described comprising a drum having a chamber, a yieldable tubular body extending through the chamber, there being means at the forward portion of the tubular yieldable body for engaging a reproducer needle, means whereby the drum may be connected to the reproducer of a phonograph, and a combined stiffening and attaching member extending centrally through said yieldable tubular body.

3. A device of the character described comprising a drum having a chamber, a yieldable tubular body extending through the chamber, there being means at the forward portion of the tubular body for engaging a reproducer needle, and means whereby the drum may be connected to the reproducer of a phonograph.

4. A device of the class described comprising a cylindrical drum having a chamber, a yieldable tubular body extending through the drum and the chamber of the same, there being means at the forward portion of the tubular body for engaging a reproducer needle, a stiffening and attaching bolt extending centrally through the yieldable tubular body, a fastening device for securing said bolt in position, and a connector associated with the drum and adapted for engagement by the reproducer of a phonograph.

In testimony whereof I affix my signature.

MORITZ F. CORSWANDT.