US 20050113640A1

(19) United States

(12) Patent Application Publication (10) Pub. No.: US 2005/0113640 A1

Saadat et al. (43) Pub. Date: May 26, 2005

(54) ENDOLUMINAL TOOL DEPLOYMENT SYSTEM

(75) Inventors: **Vahid Saadat**, Saratoga, CA (US); **Richard C. Ewers**, Fullerton, CA (US); **Eugene Chen**, Carlsbad, CA (US); **David Miller**, Palo Alto, CA (US)

Correspondence Address:
TOWNSEND AND TOWNSEND AND CREW, LLP
TWO EMBARCADERO CENTER
EIGHTH FLOOR
SAN FRANCISCO, CA 94111-3834 (US)

(73) Assignee: **USGI Medical Inc.**, San Clemente, CA

(21) Appl. No.: **10/990,559**

(22) Filed: **Nov. 16, 2004**

Related U.S. Application Data

(63) Continuation of application No. 10/346,709, filed on Jan. 15, 2003.

Publication Classification

(51) **Int. Cl.**[7] **A61B 1/018**

(52) **U.S. Cl.** **600/106**; 600/104

(57) **ABSTRACT**

Systems, devices and methods are provided for endoscopic procedures involving tissue manipulations beyond the capabilities of traditional endoscopic instruments. Embodiments of the systems include an elongated main body having a scope therethrough and at least one steerable tool arm which extends from the distal end of the main body. In preferred embodiments, the system includes two tool arms, each arm steerable to form a curve laterally outward which then bends laterally inward so that the arms form an angular shape. In addition, end effectors extend from the distal ends of each tool arm for use in manipulation of tissue. The angular shape brings the end effectors together in view of the scope for cooperative movements which are continuously visible by the surgeon. In addition, the tool arms may be steerable in any additional direction and may be rotateable to allow grasping, elevation and more complex manipulation of tissue.

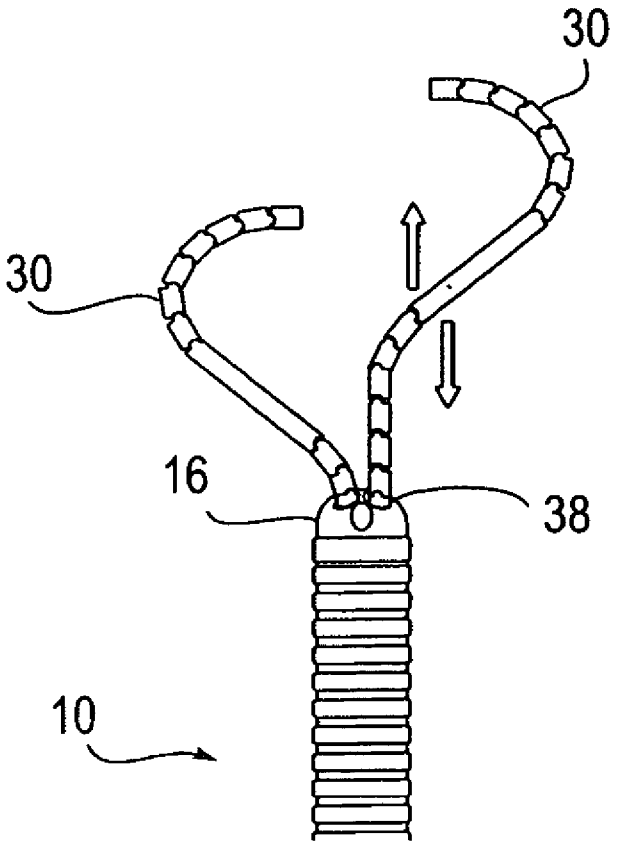

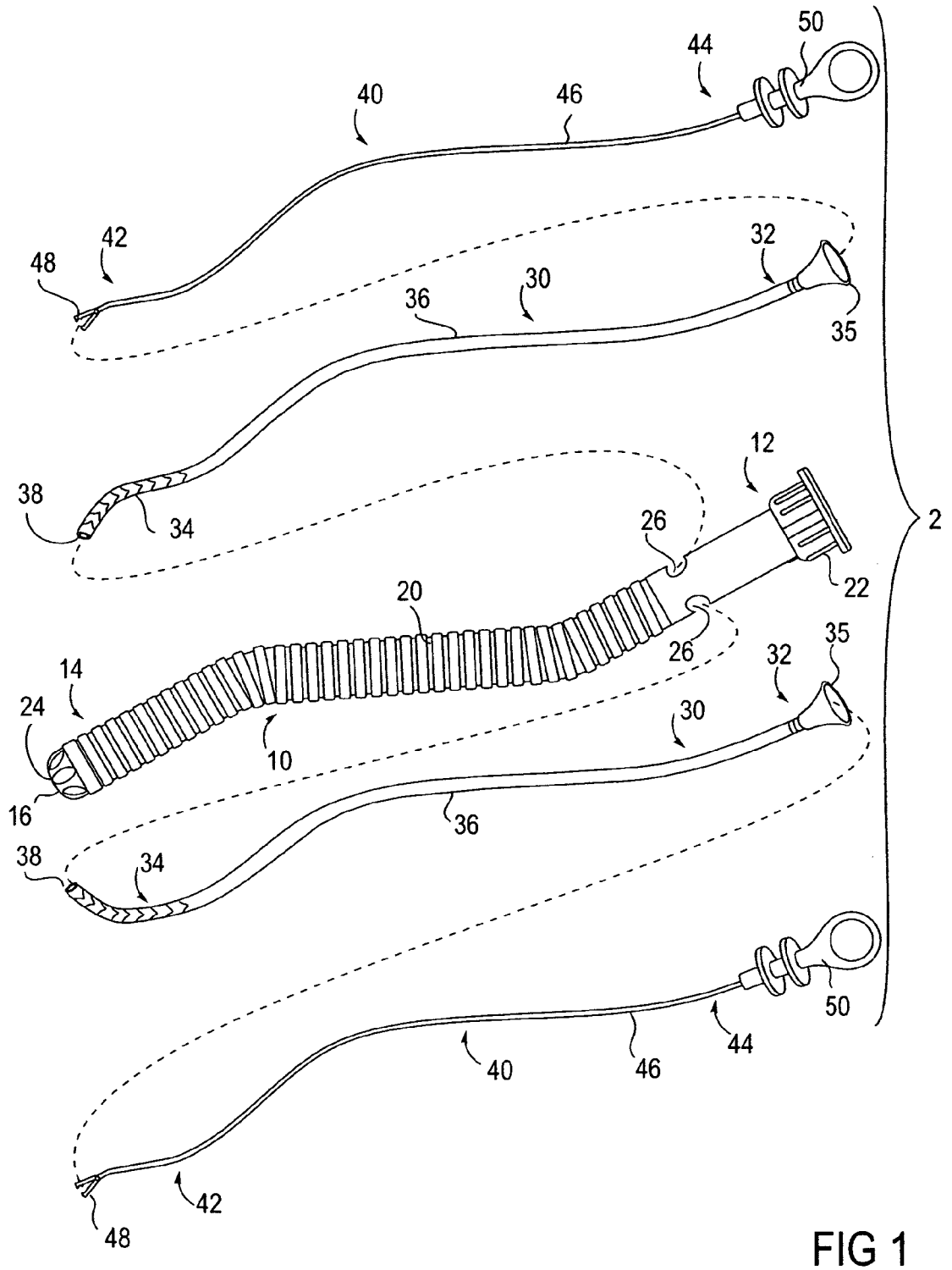
50
44
40
46
42
48
32
30
36
35
38
34
12
26
22
2
20
14
24
10
16
35
32
30
36
38
34
50
44
40
46
42
48

FIG 1

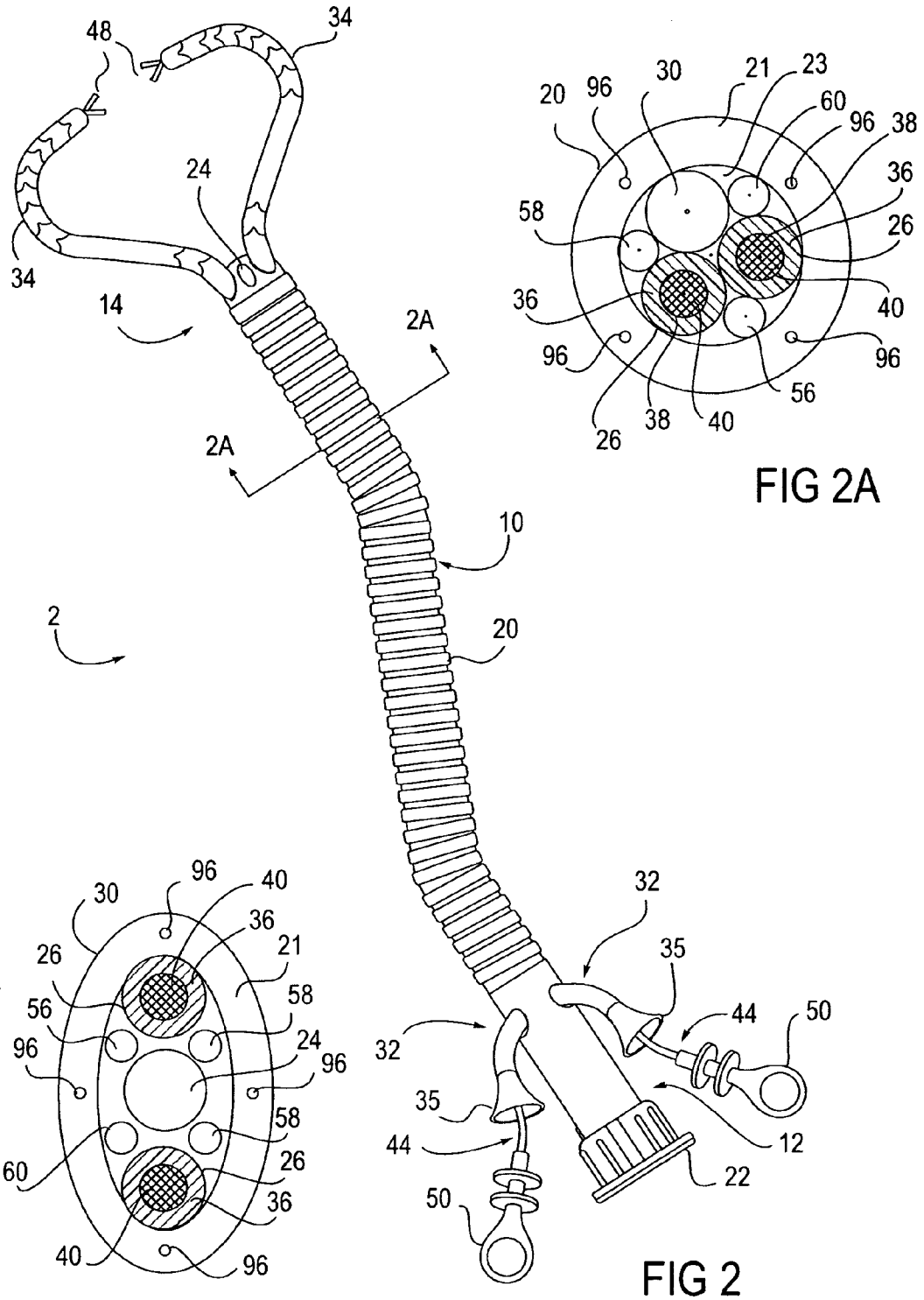

FIG 2

FIG 2A

FIG 2B

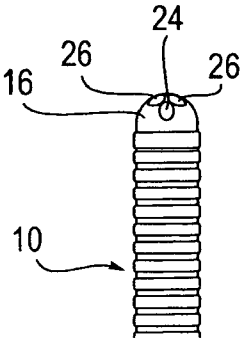

FIG 3A

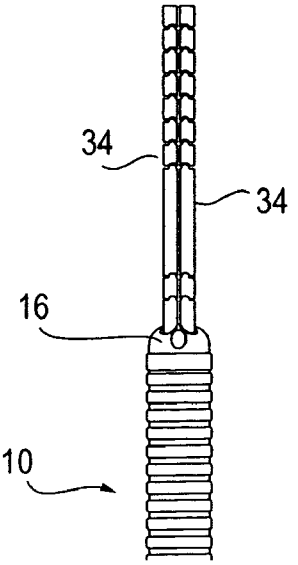

FIG 3B

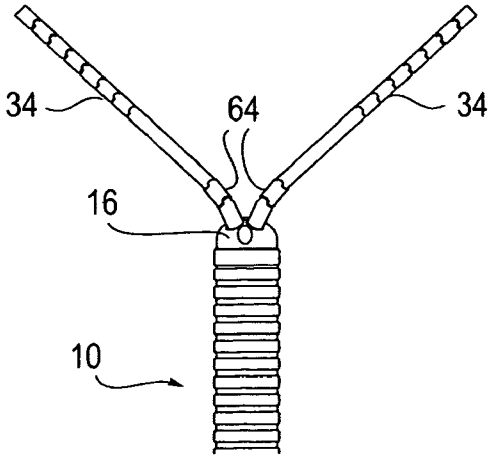

FIG 3C

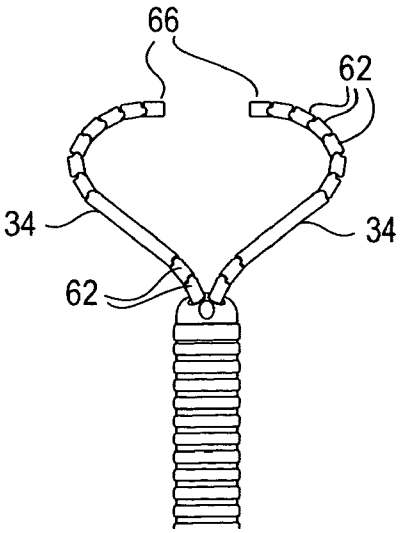

FIG 3D

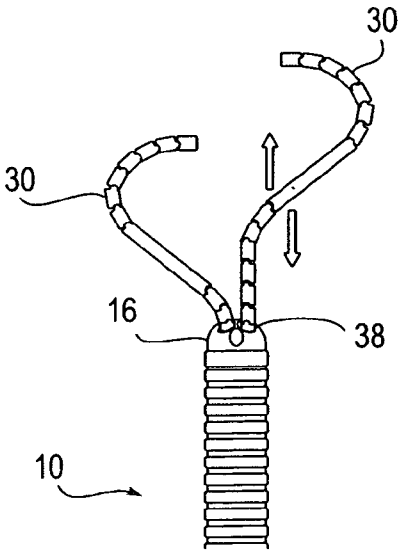

FIG 4

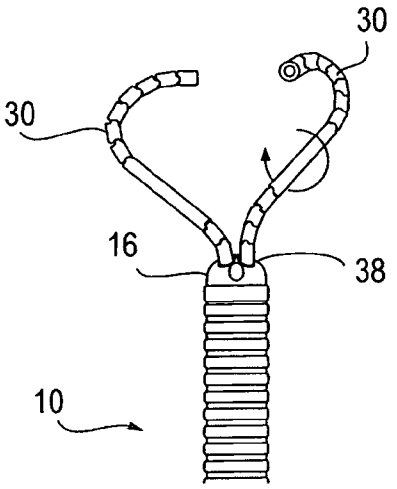

FIG 5

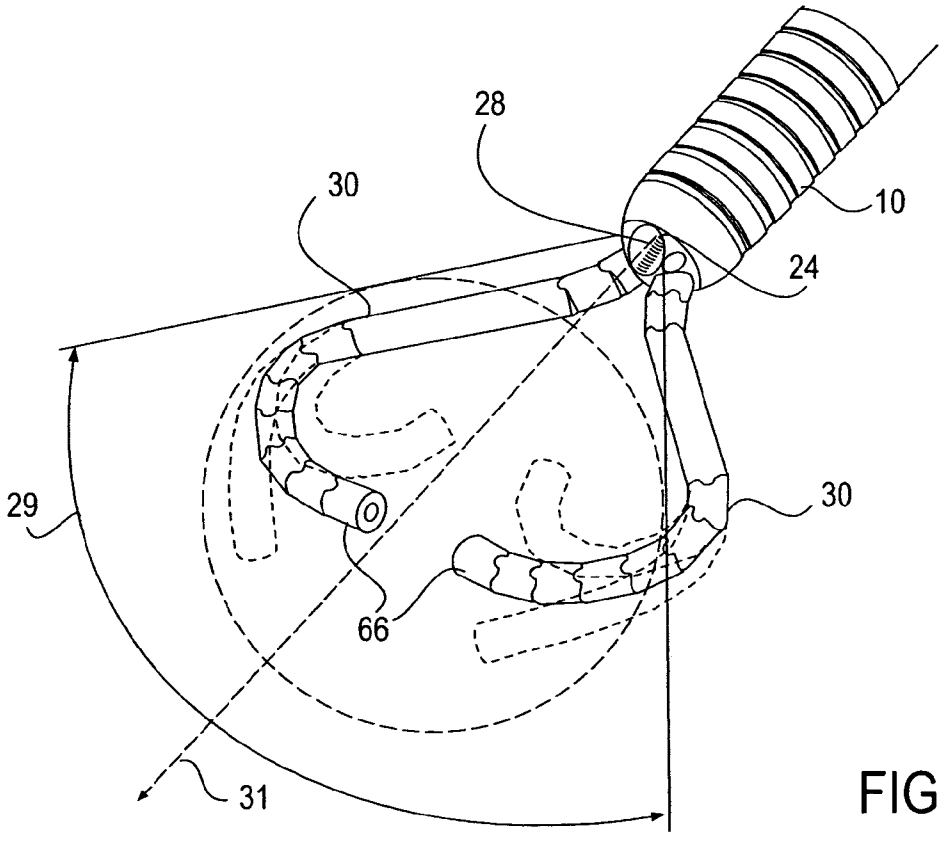

FIG 6

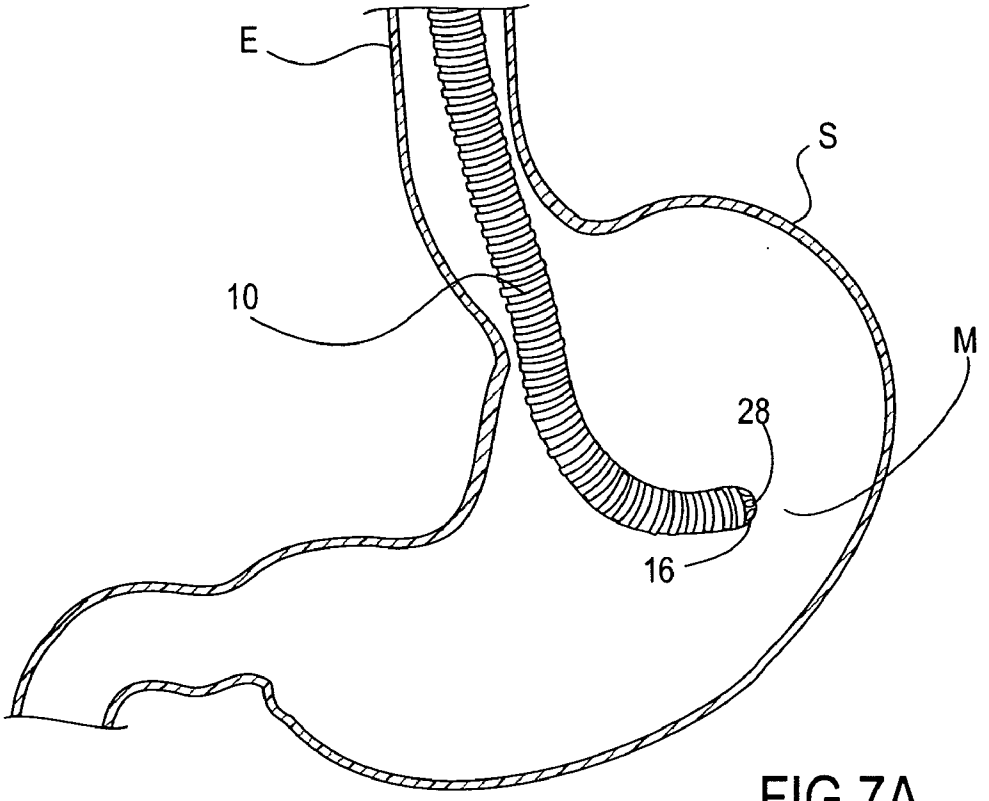

FIG 7A

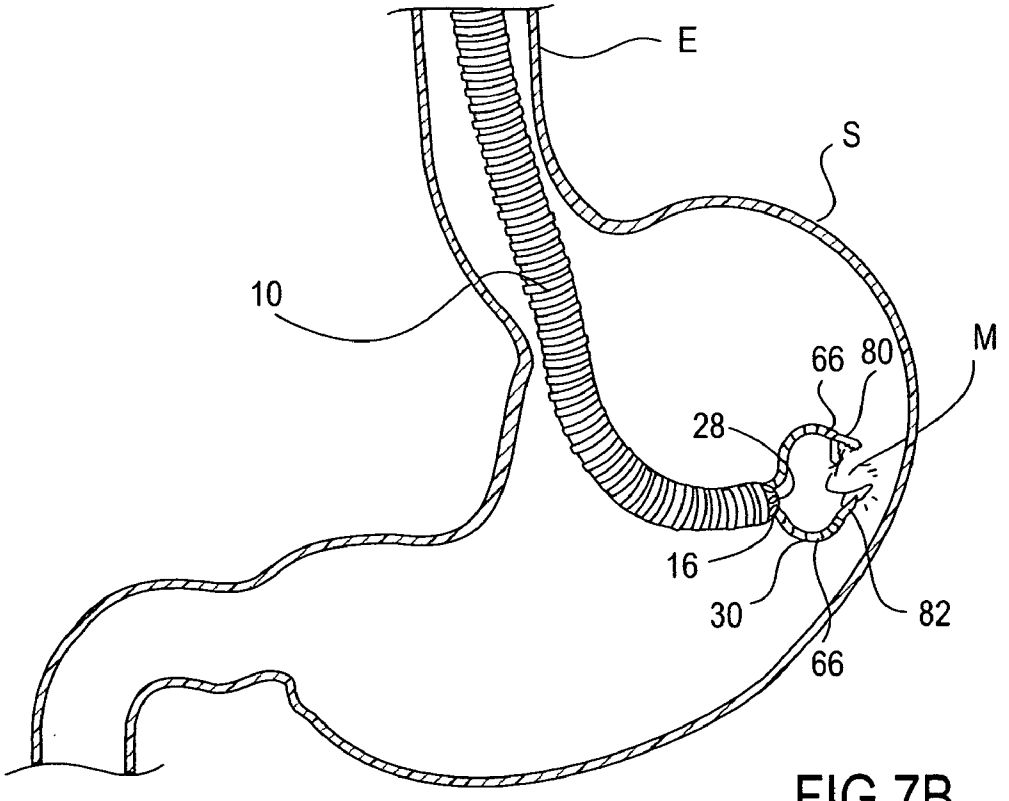

FIG 7B

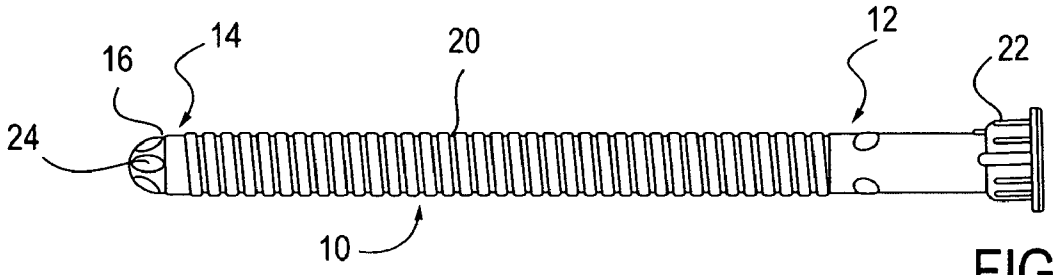

FIG 8A

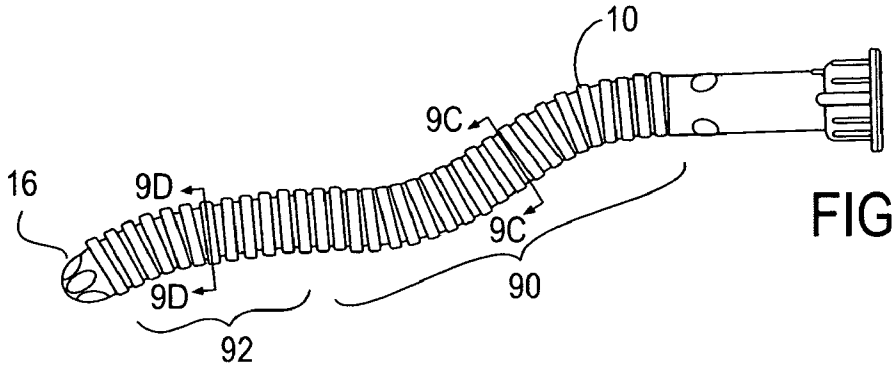

FIG 8B

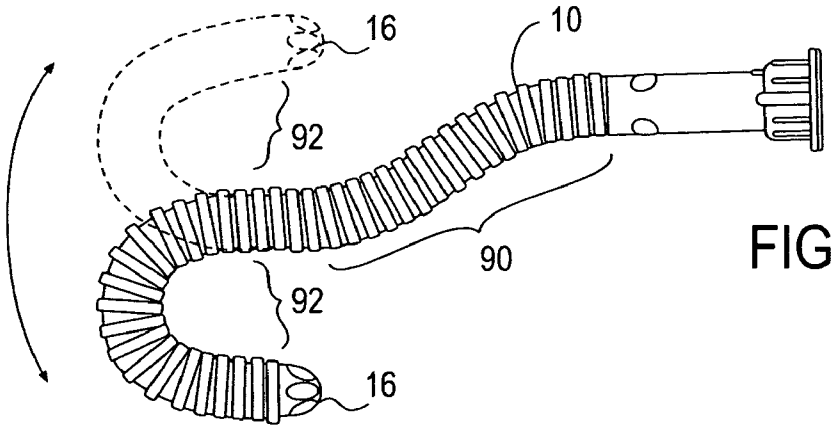

FIG 8C

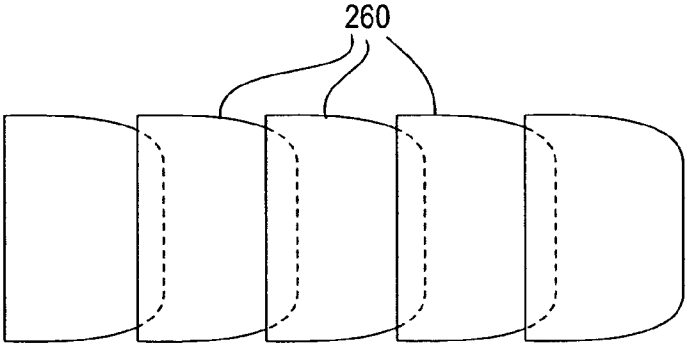

FIG 9A

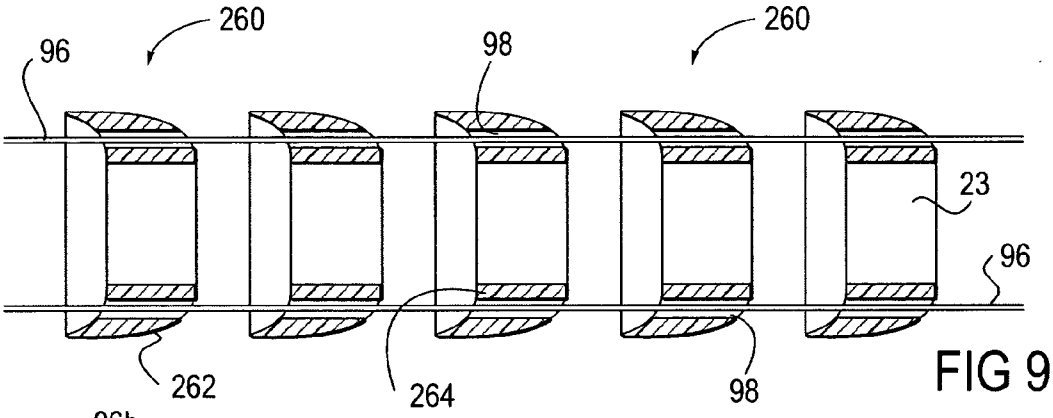

FIG 9B

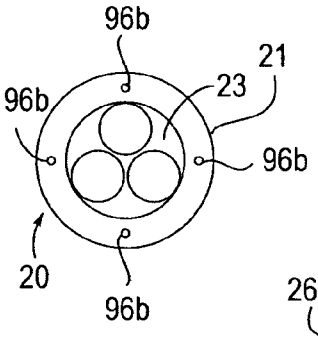

FIG 9C

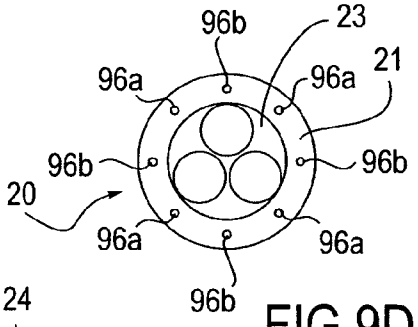

FIG 9D

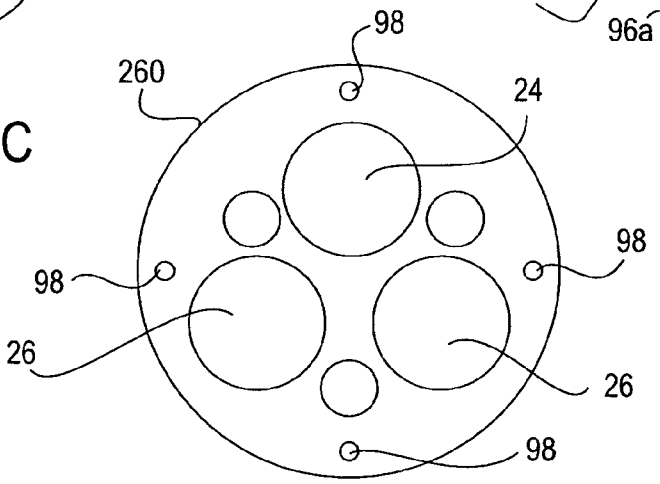

FIG 9E

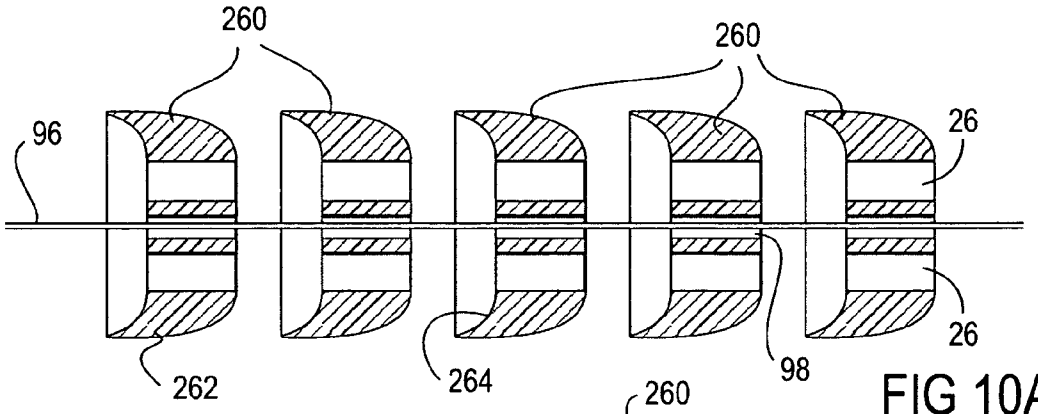

FIG 10A

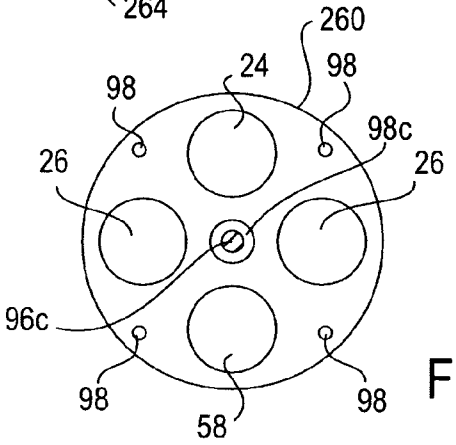

FIG 10B

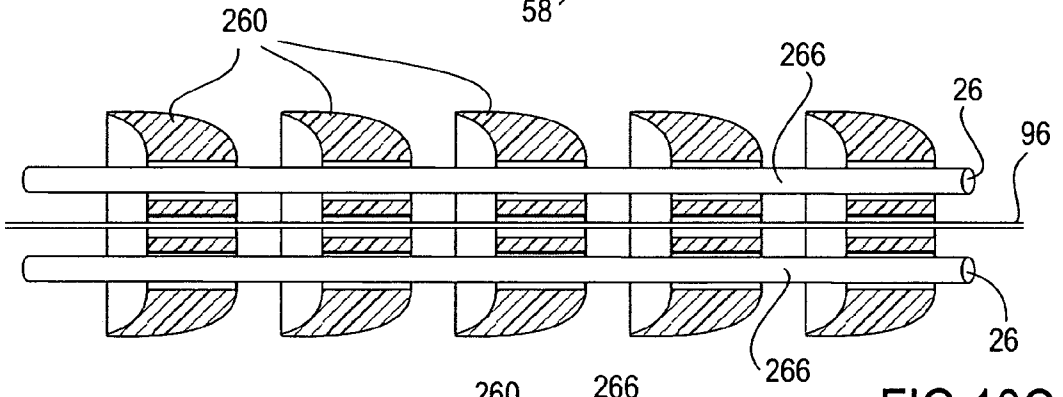

FIG 10C

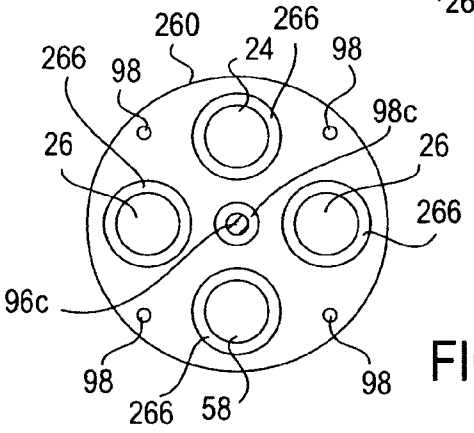

FIG 10D

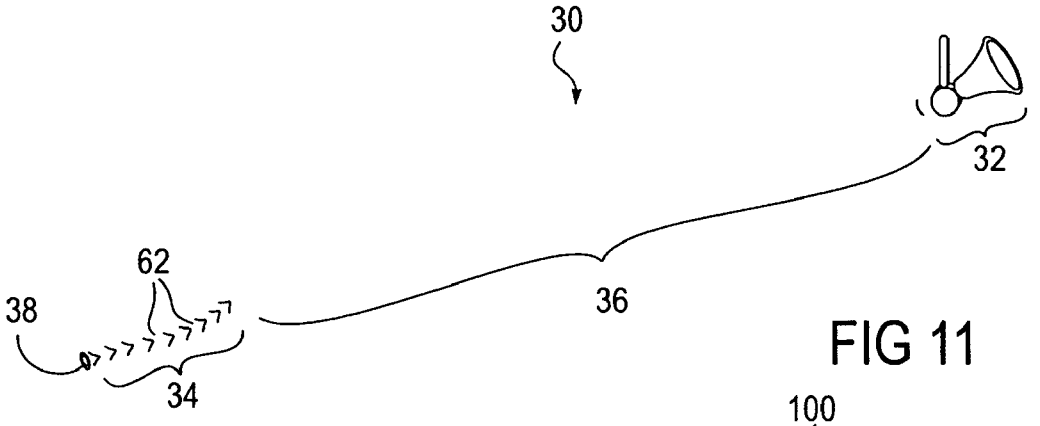

FIG 11

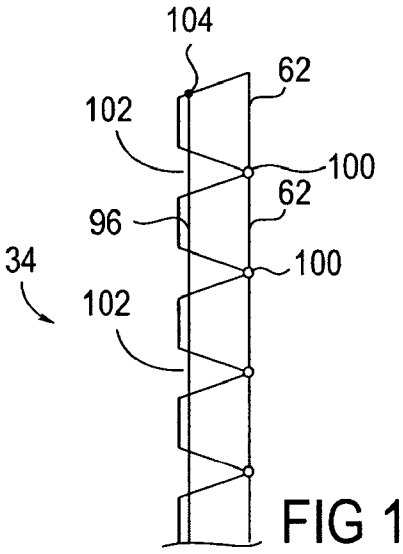

FIG 12A

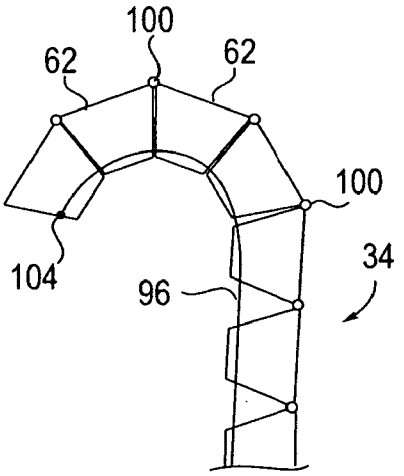

FIG 12B

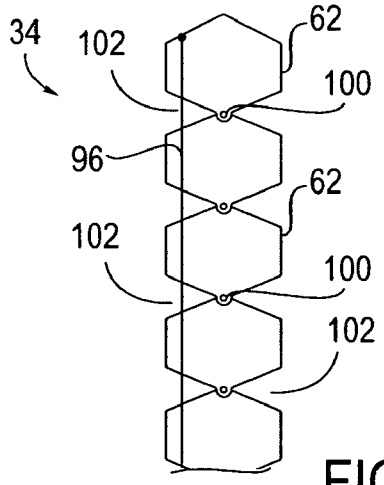

FIG 13A

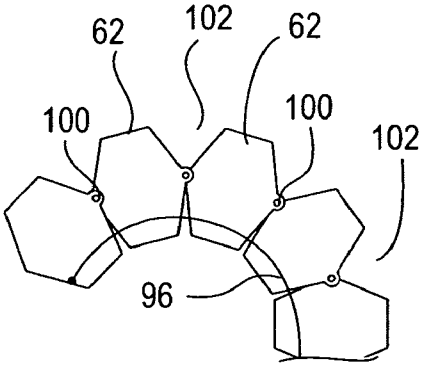

FIG 13B

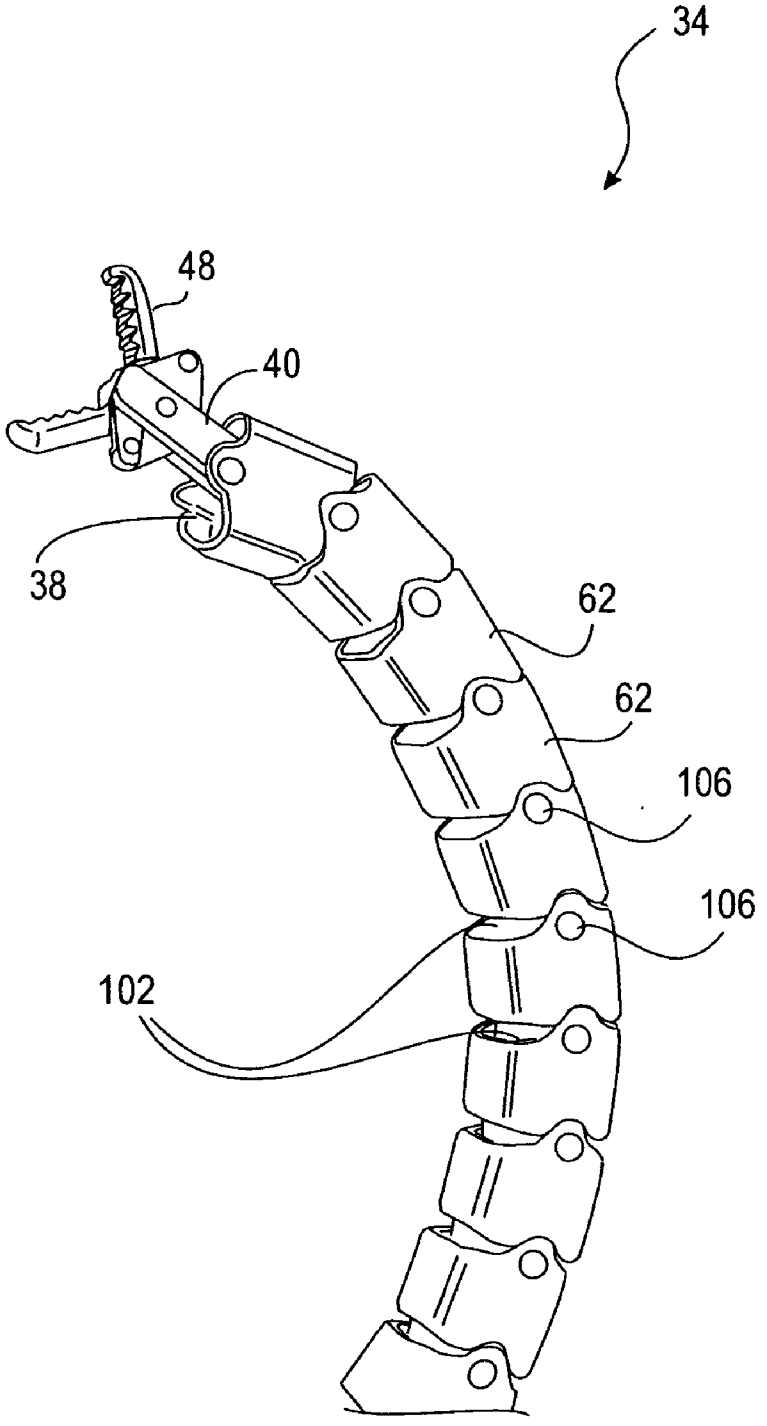

FIG 14

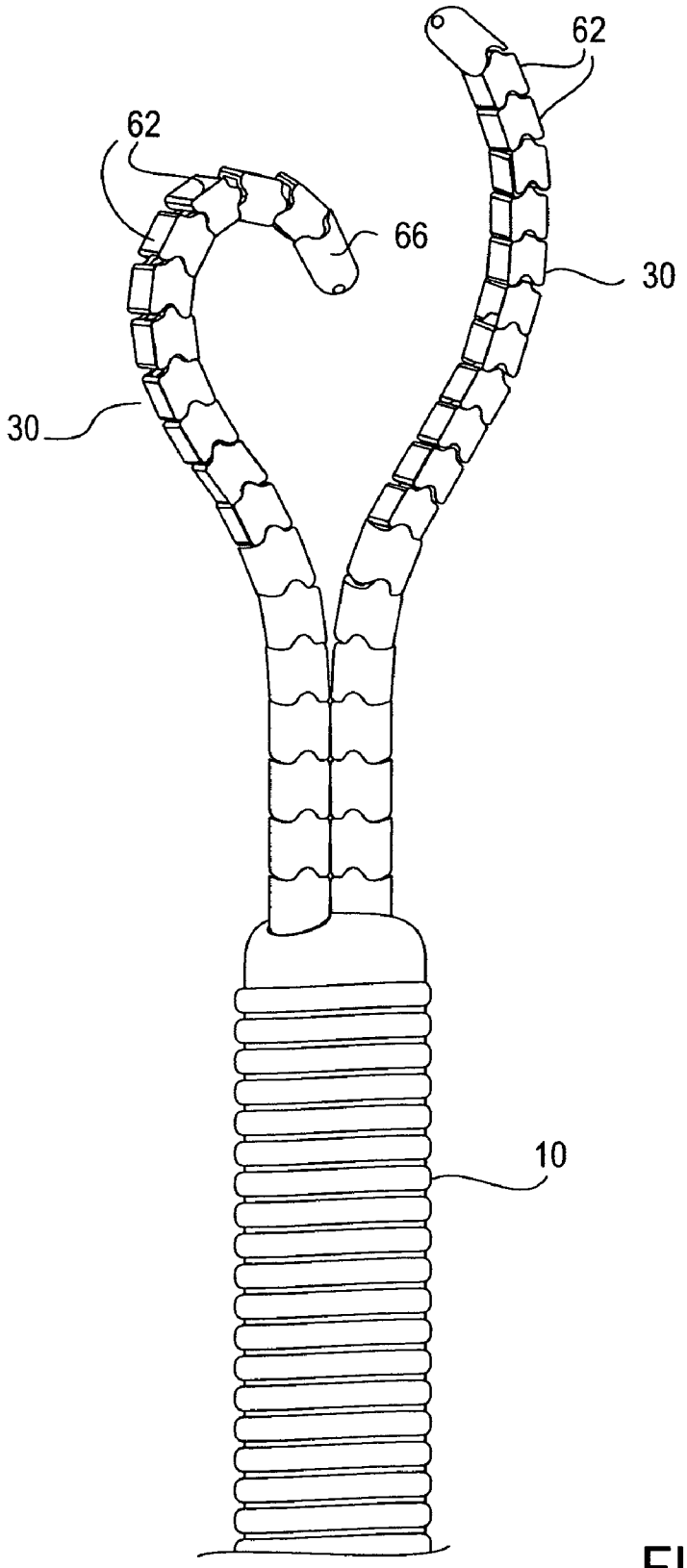

FIG 15

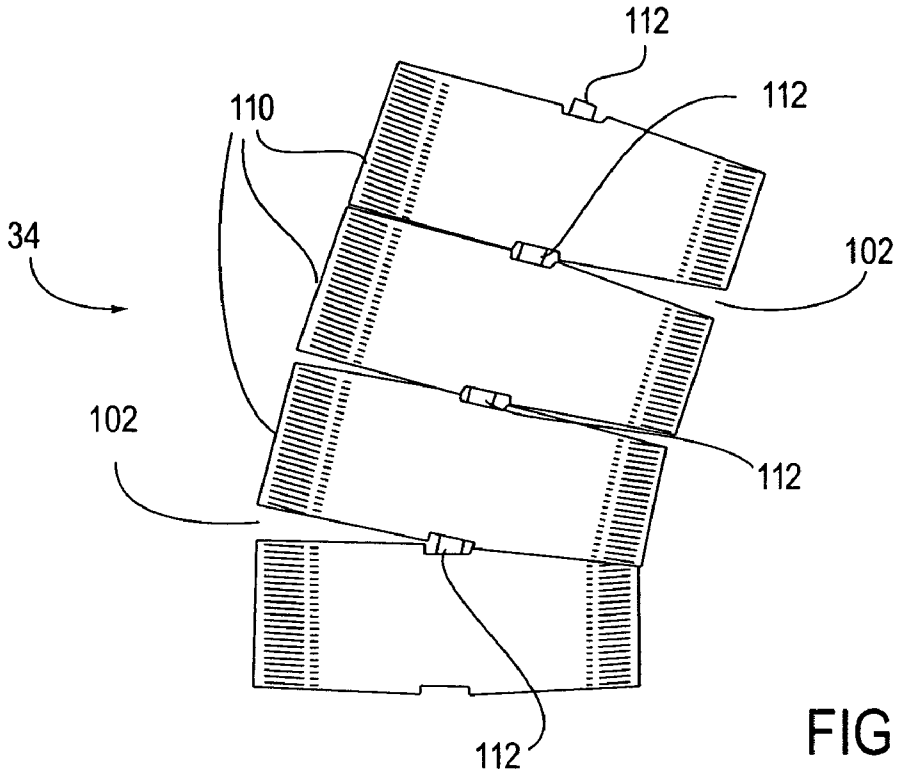

FIG 16A

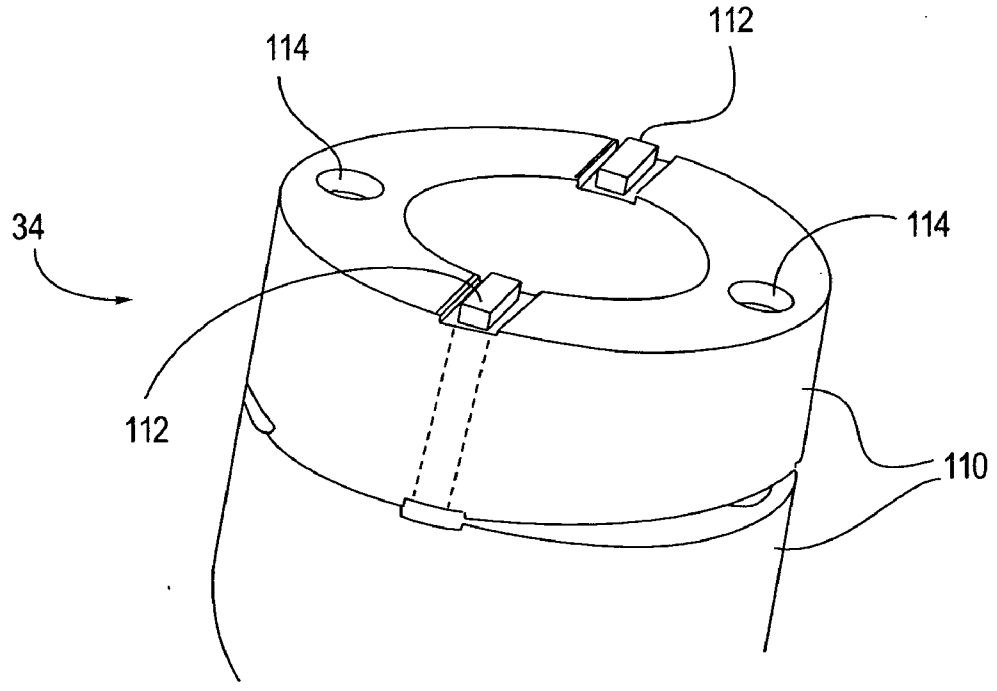

FIG 16B

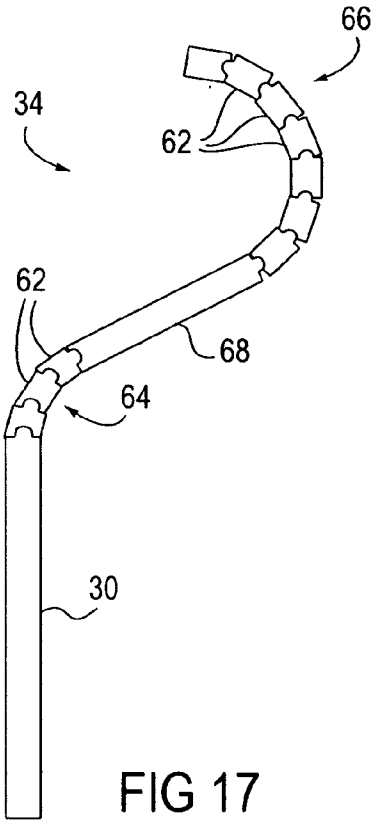

FIG 17

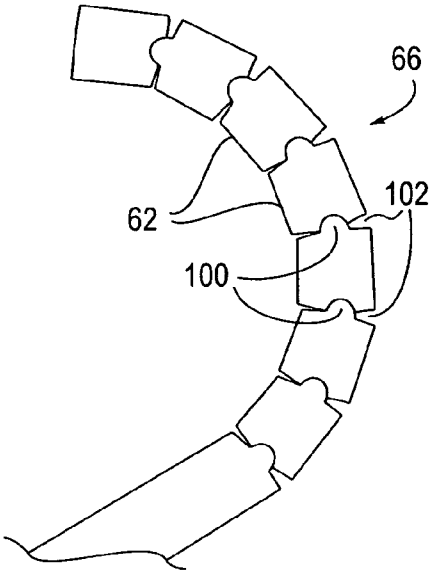

FIG 17A

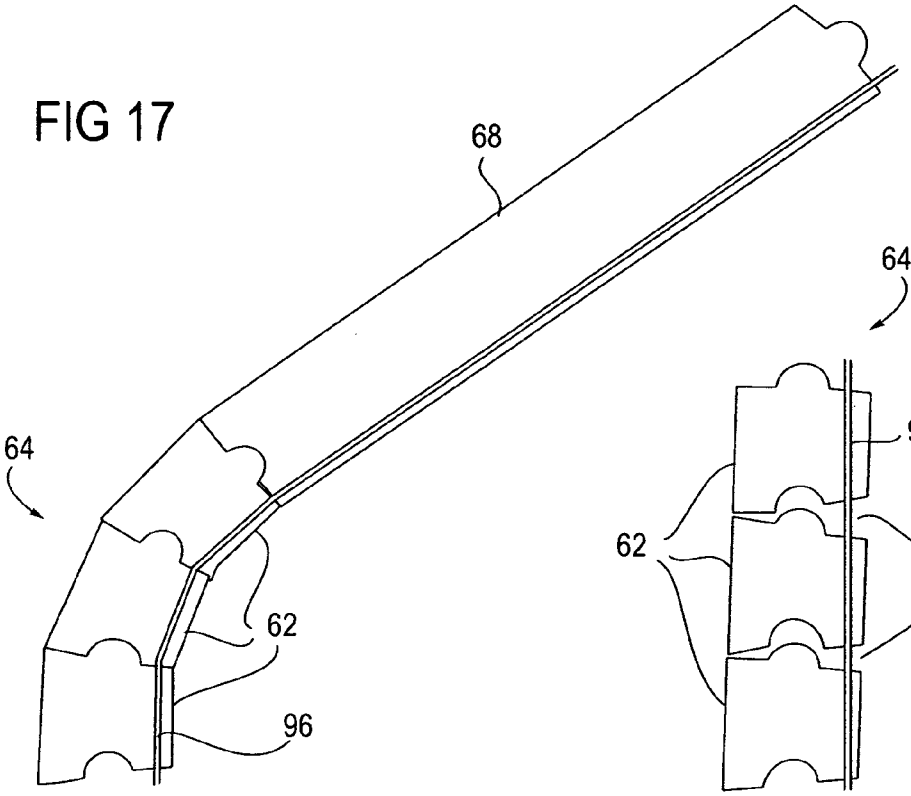

FIG 17C

FIG 17B

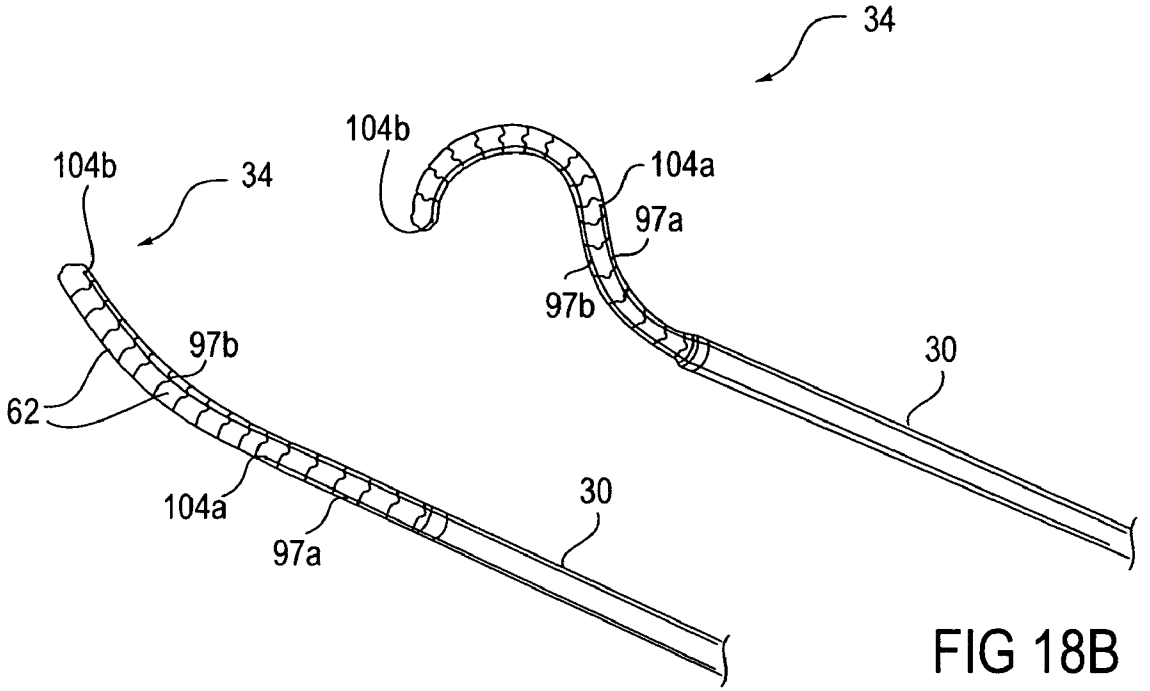

FIG 18A

FIG 18B

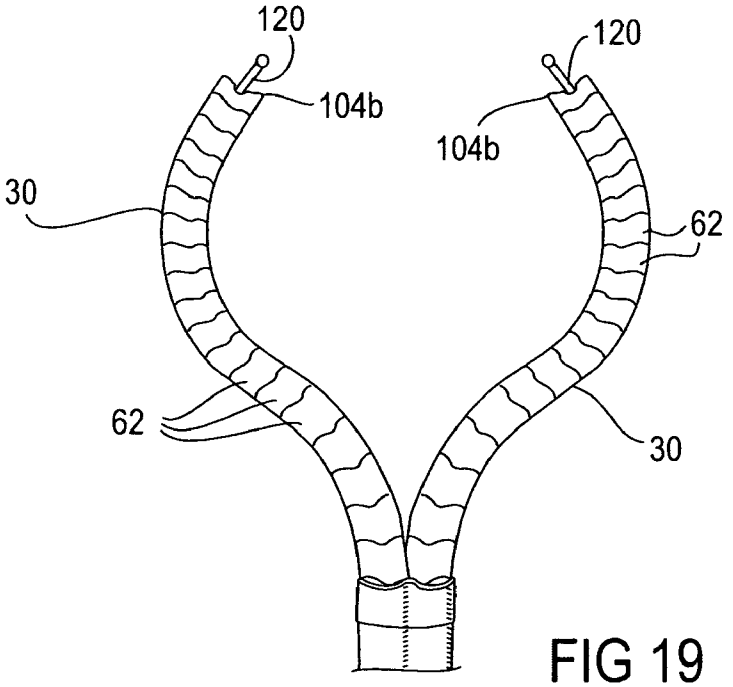

FIG 19

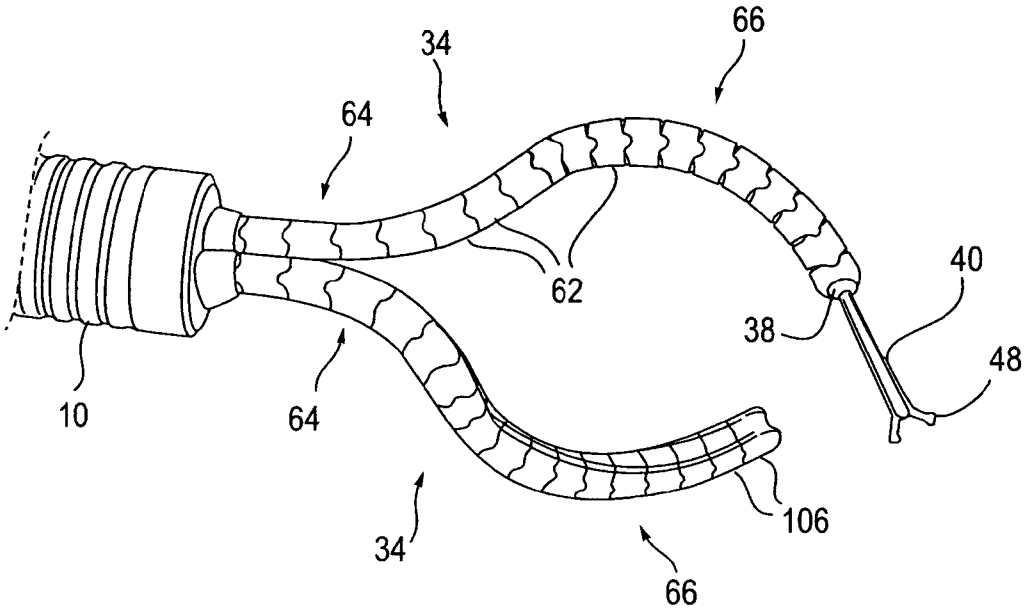

FIG 20

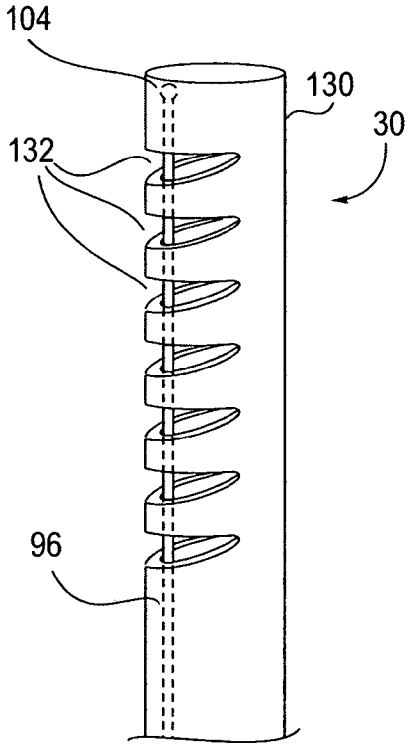

FIG 21A

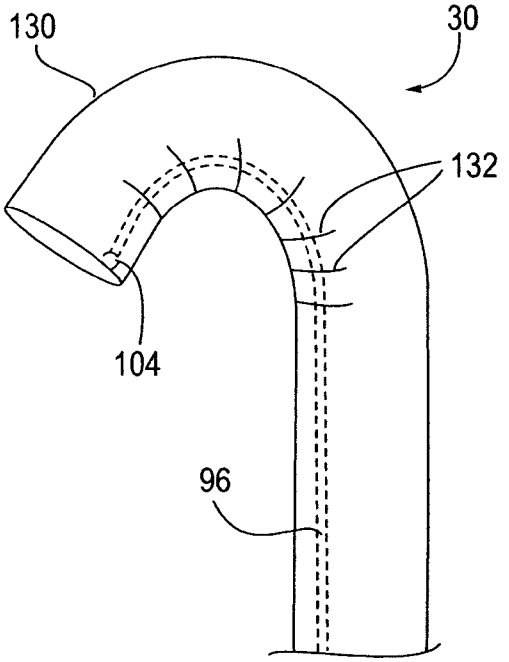

FIG 21B

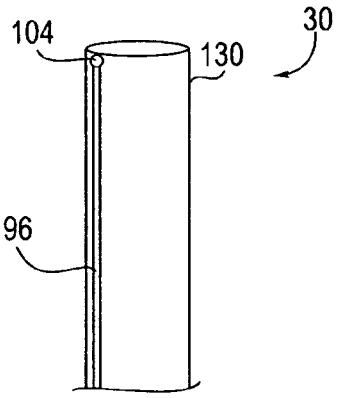

FIG 21C

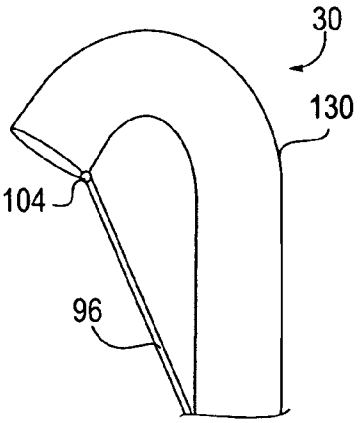

FIG 21D

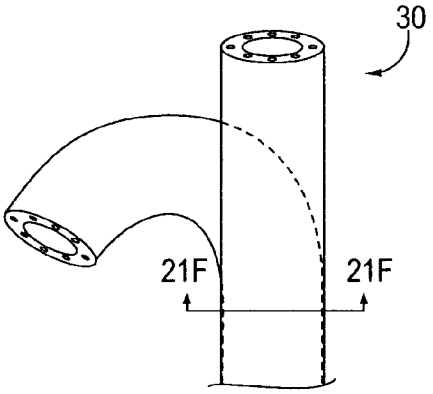

FIG 21E

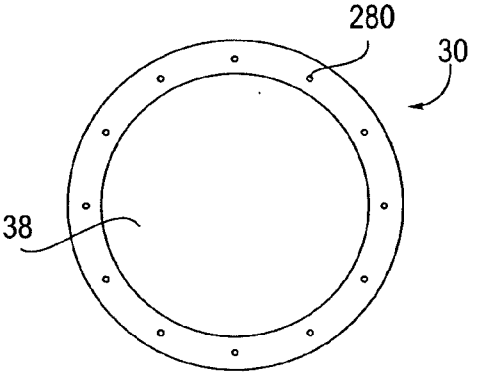

FIG 21F

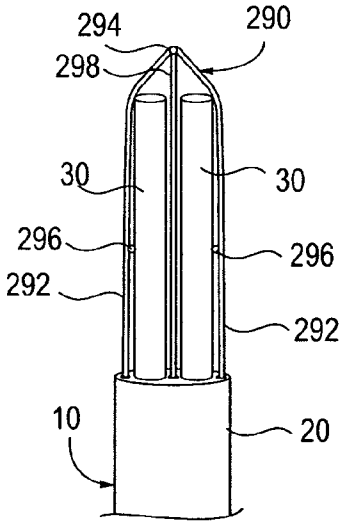

FIG 21G

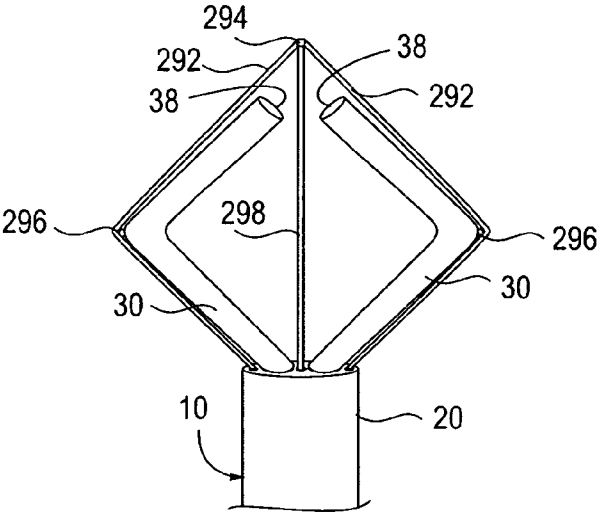

FIG 21H

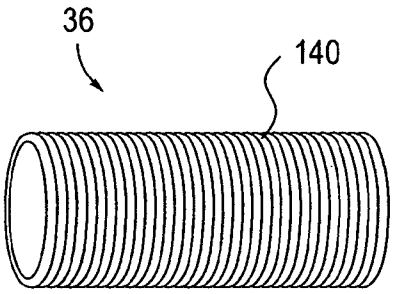

FIG 22A

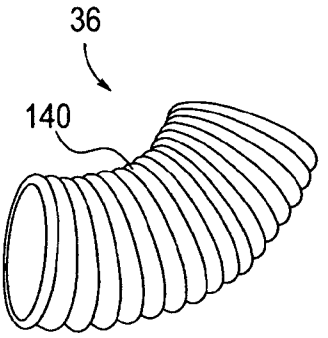

FIG 22B

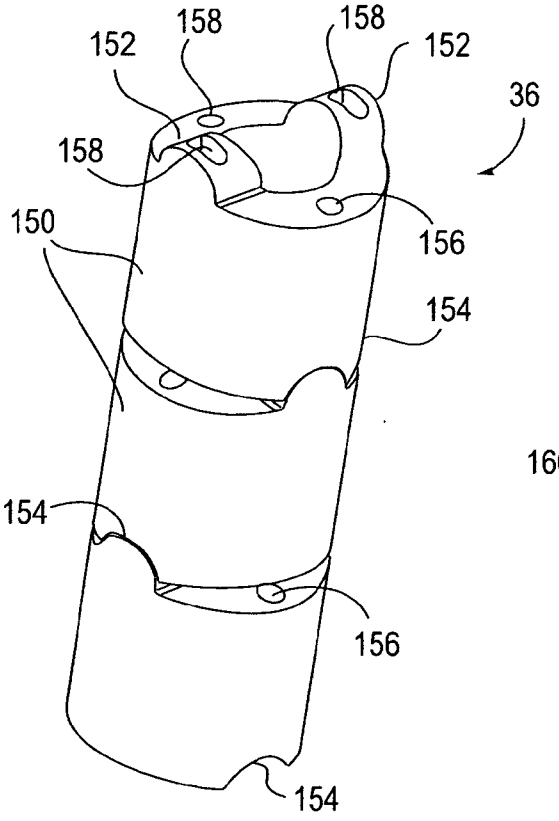

FIG 23

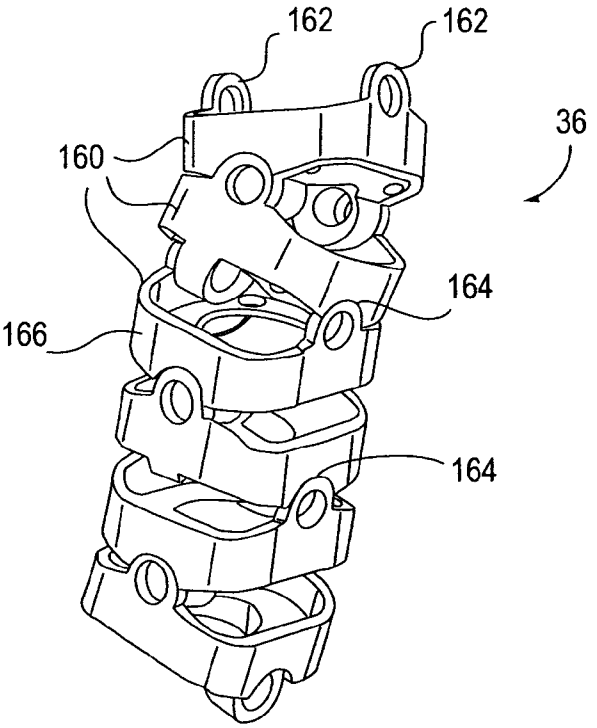

FIG 24

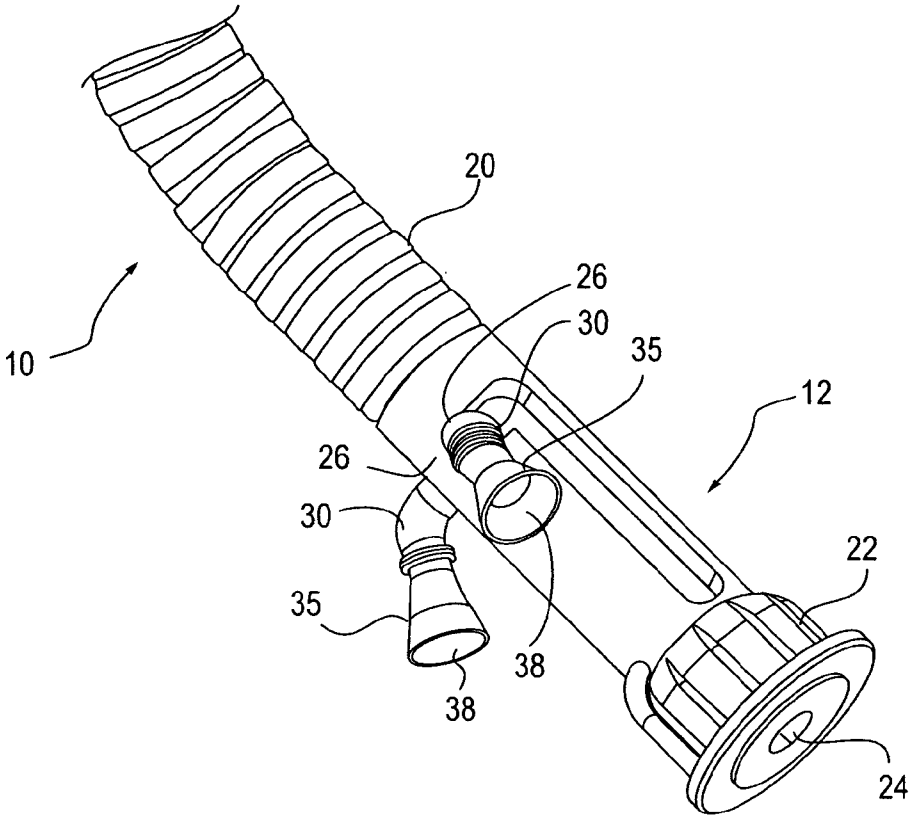

FIG 25A

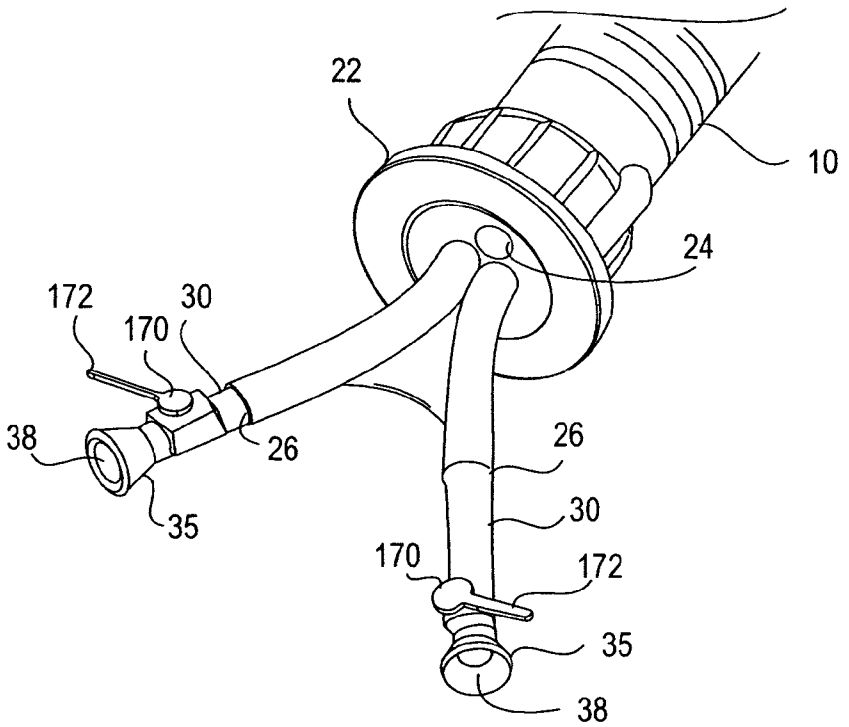

FIG 25B

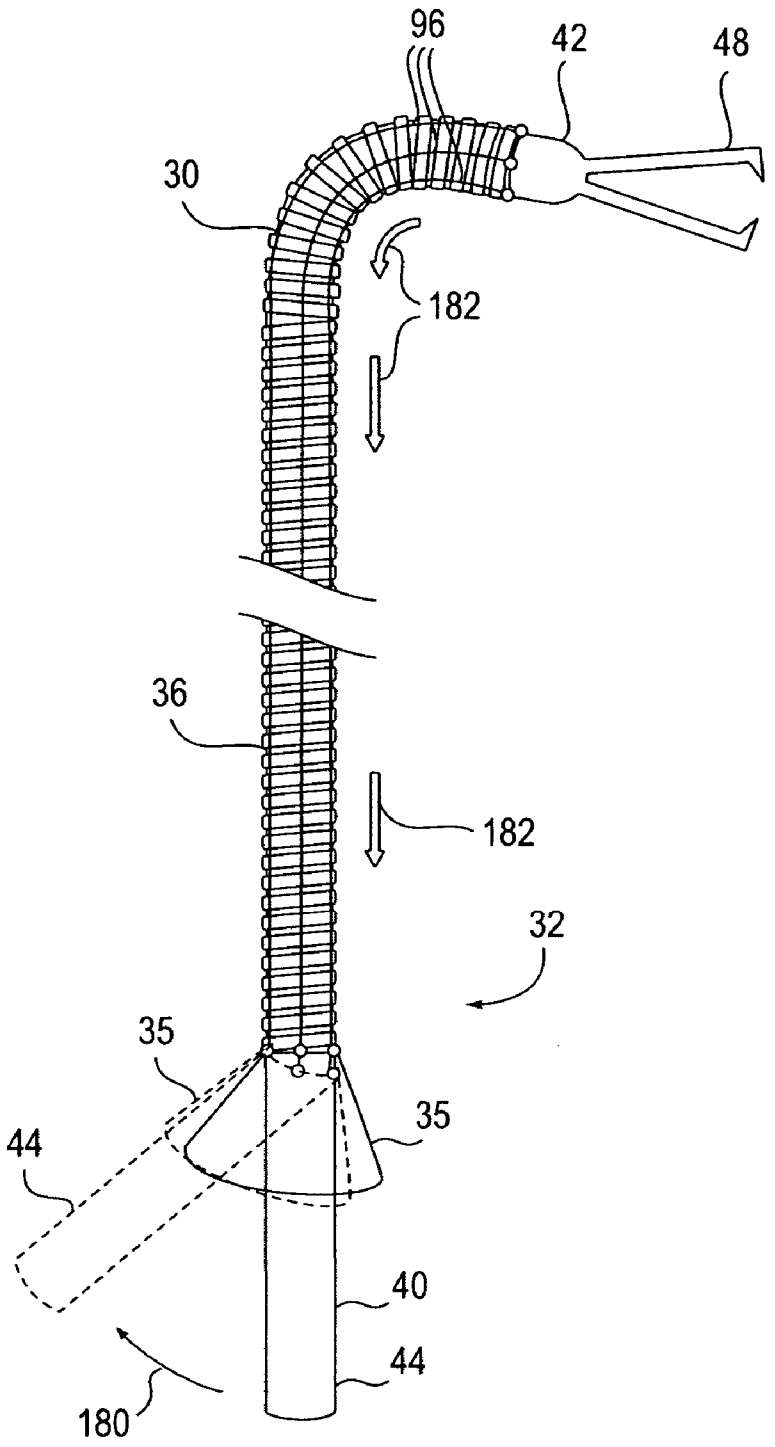

FIG 26

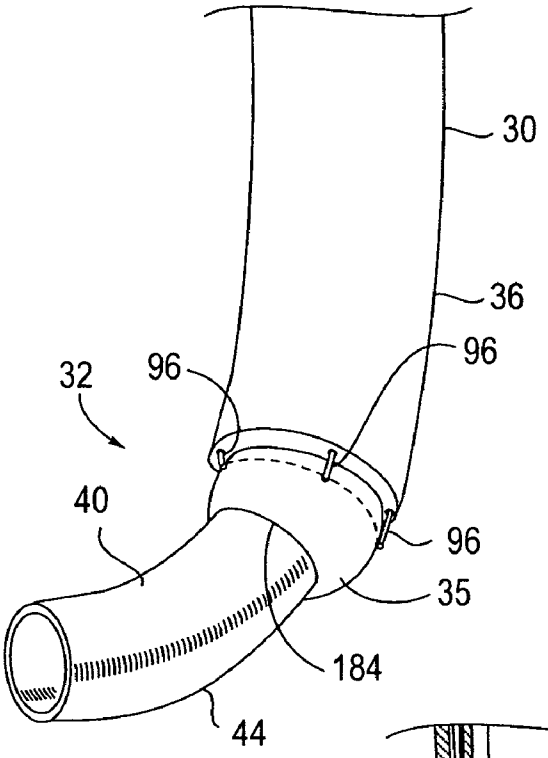

FIG 27A

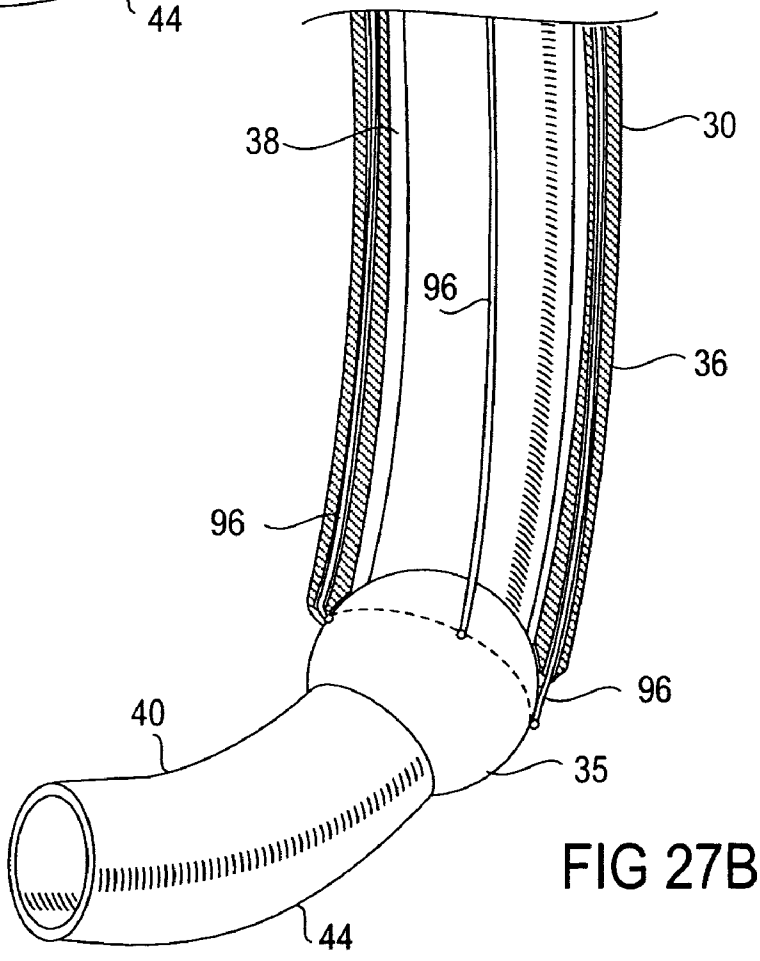

FIG 27B

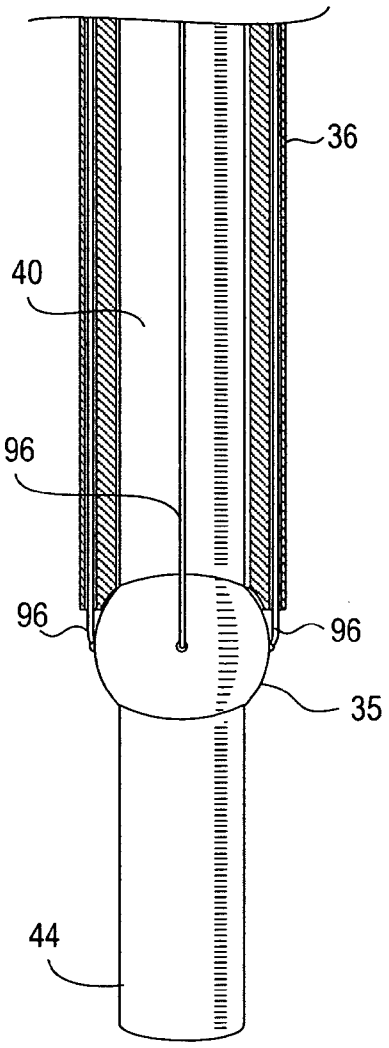

FIG 28A

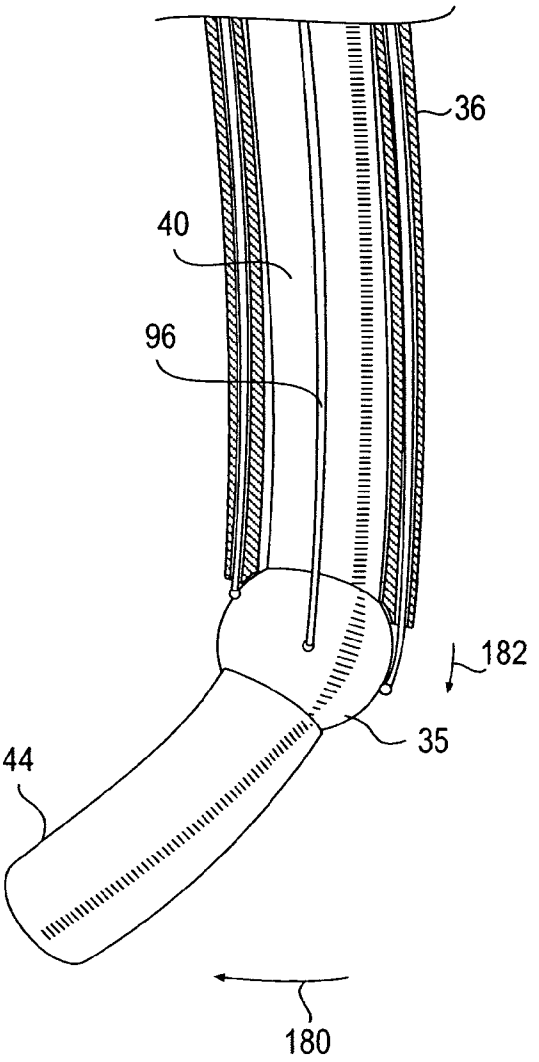

FIG 28B

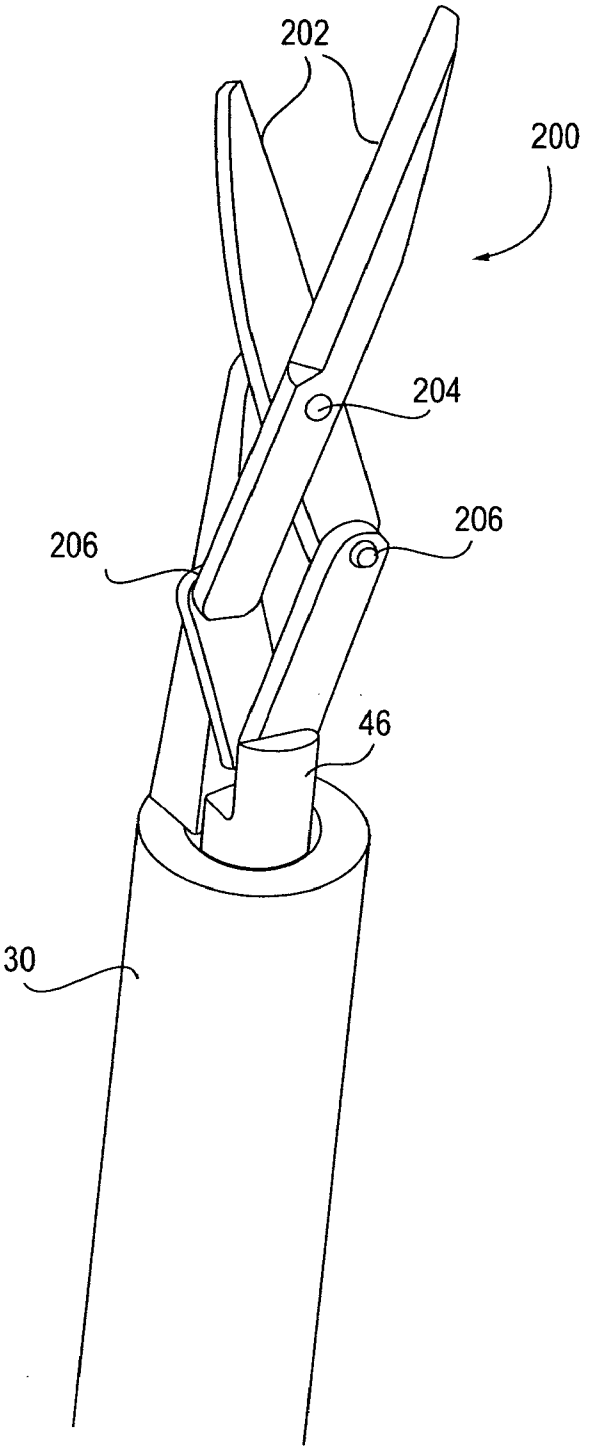

FIG 29

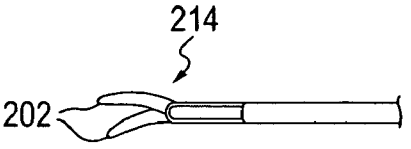

FIG 29A

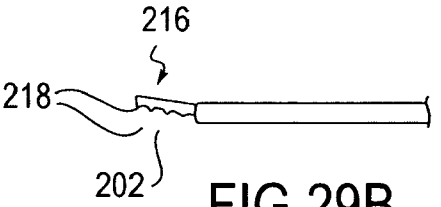

FIG 29B

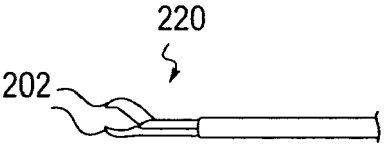

FIG 29C

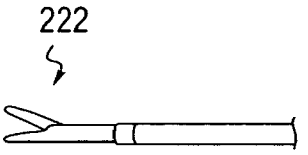

FIG 29D

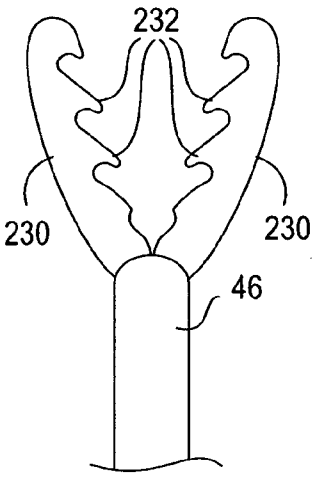

FIG 30

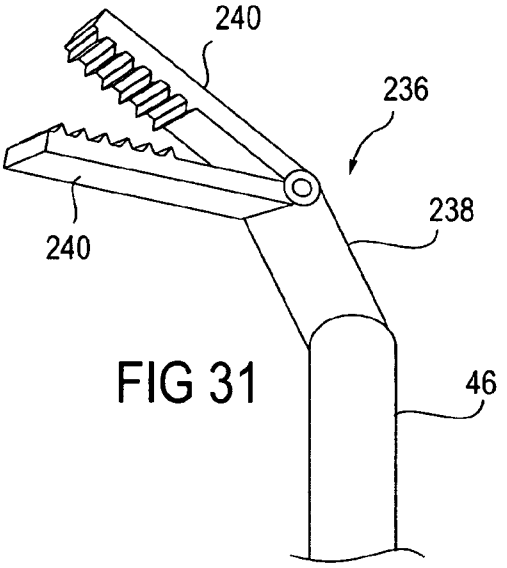

FIG 31

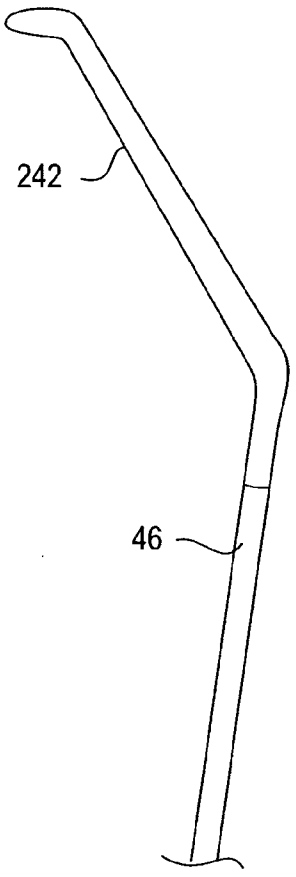

FIG 32

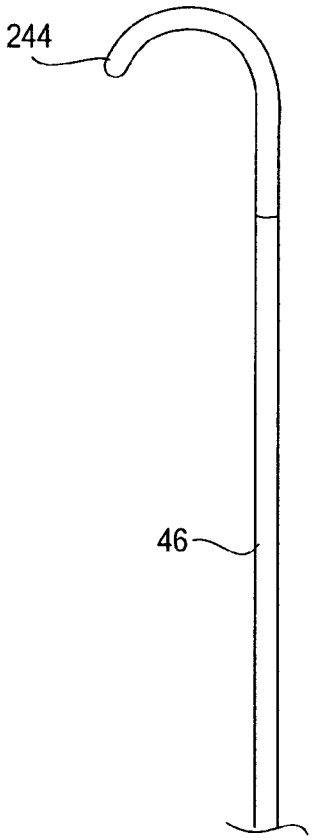

FIG 33

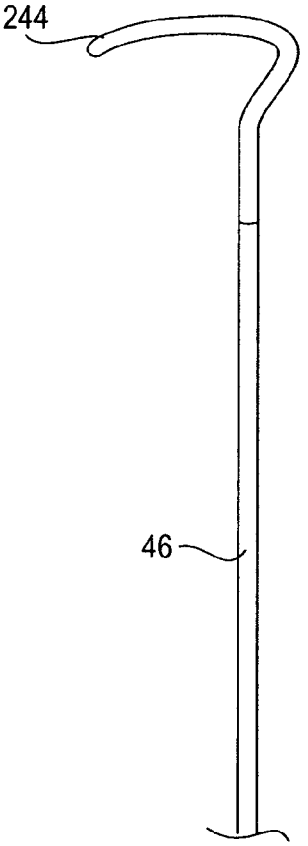

FIG 34

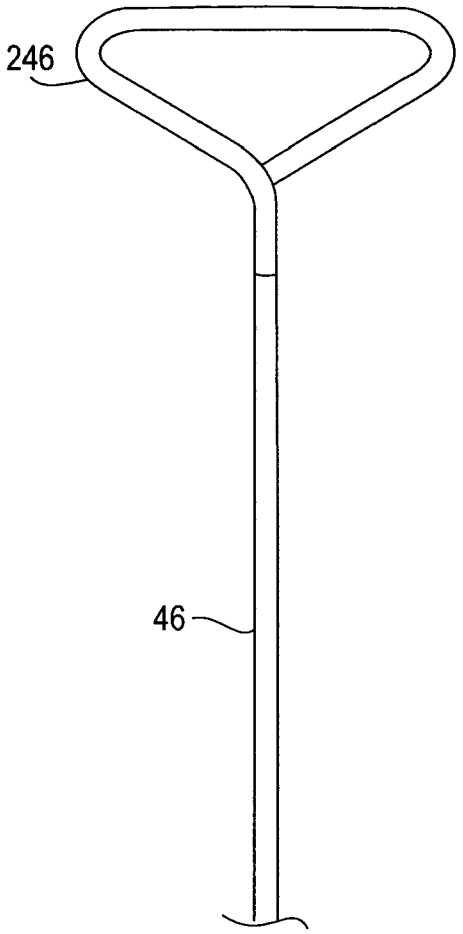

FIG 35

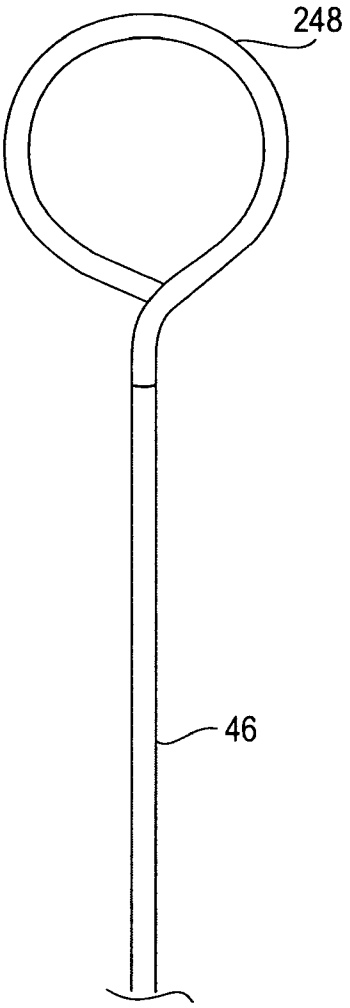

FIG 36

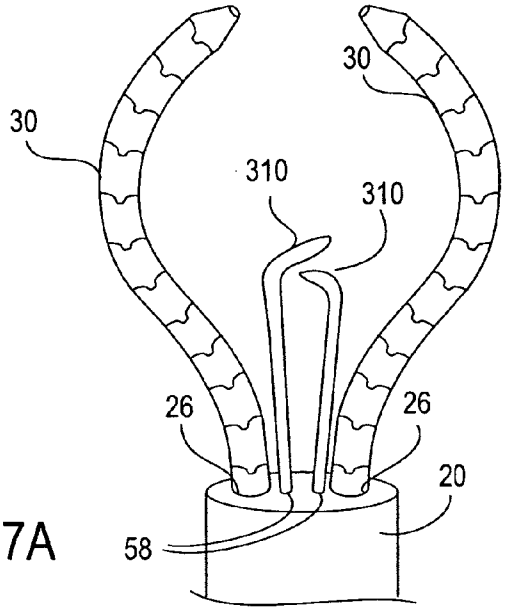

FIG 37A

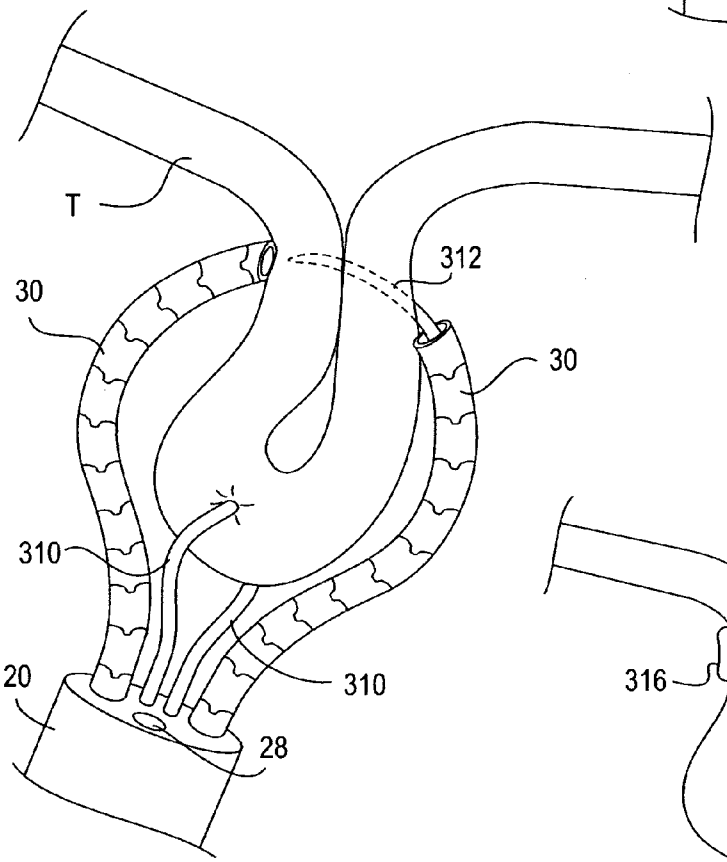

FIG 37B

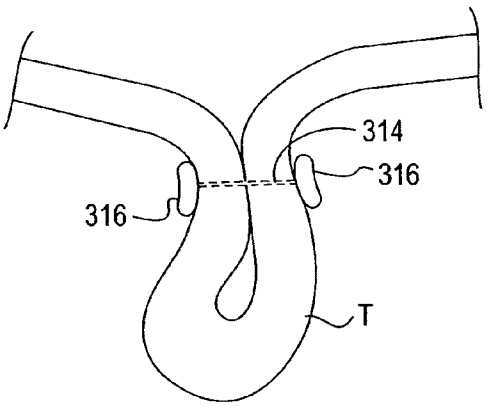

FIG 37C

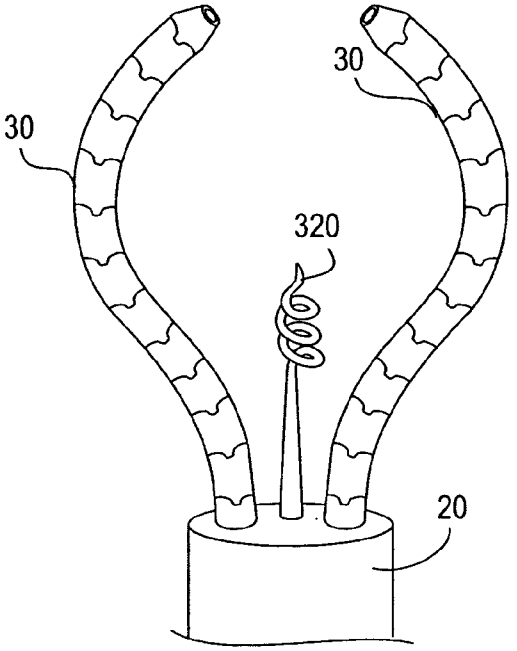

FIG 38

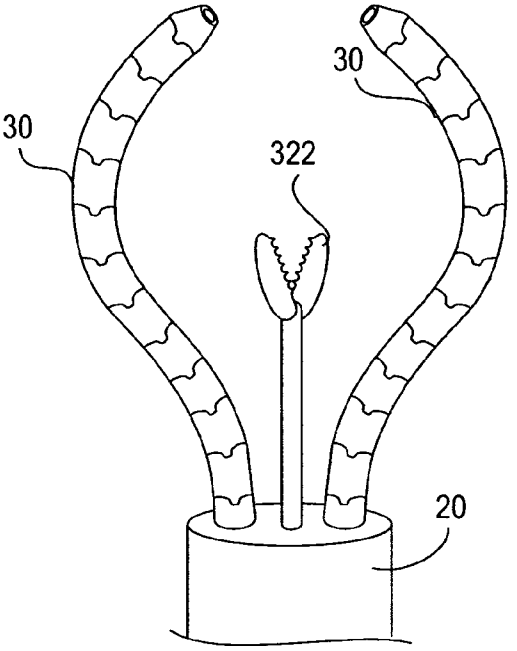

FIG 39

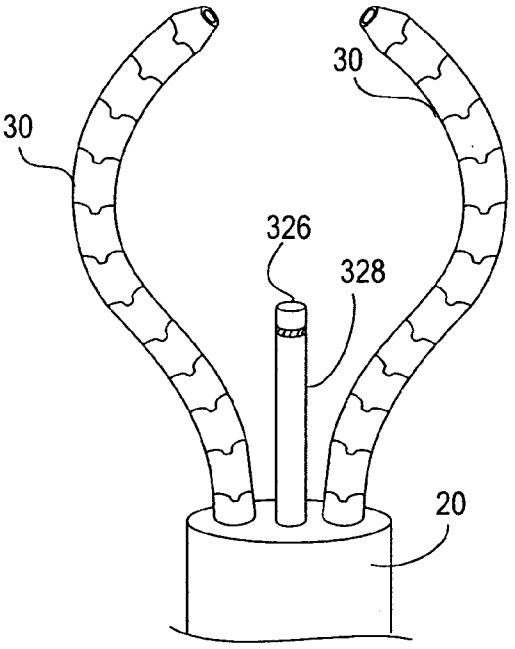

FIG 40A

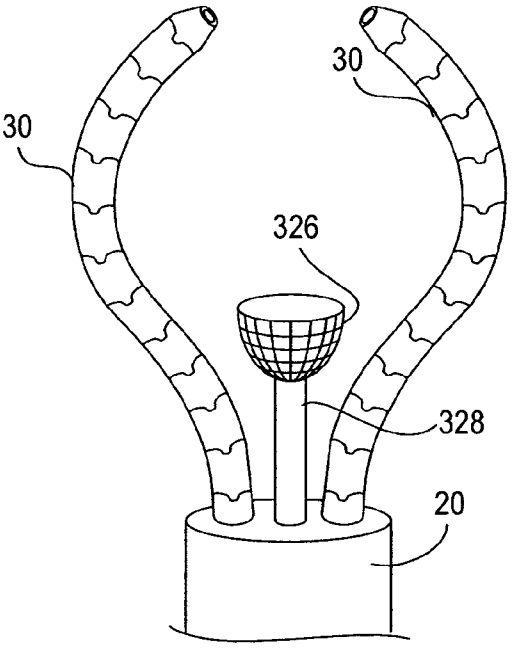

FIG 40B

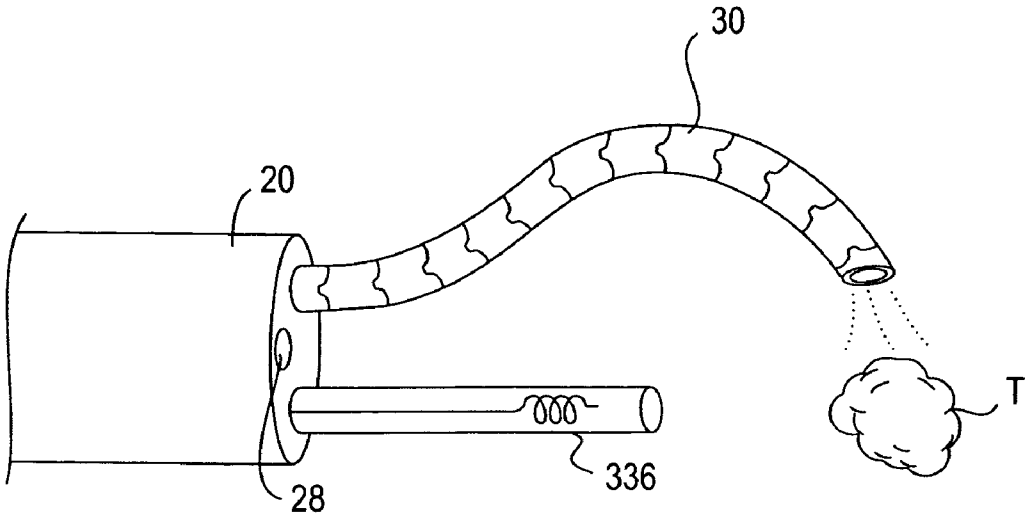

FIG 41

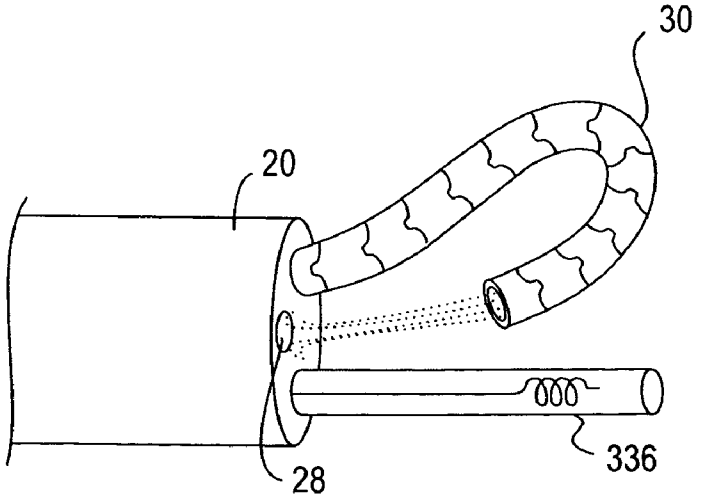

FIG 42

ENDOLUMINAL TOOL DEPLOYMENT SYSTEM

CROSS-REFERENCES TO RELATED APPLICATIONS

[0001] The present application is a continuation of U.S. patent application Ser. No. 10/346,709 (Attorney Docket No. 021496-000100US), filed Jan. 15, 2003, the full disclosure of which is incorporated herein by reference.

BACKGROUND OF THE INVENTION

[0002] The present invention relates generally to medical devices, systems and methods. More particularly, the present invention relates to devices, systems and methods for use in endoscopic or laparoscopic procedures.

[0003] Endoscopy is a form of minimally invasive procedure wherein the interior of the body is accessed and visualized through an orifice in the body, such as the esophagus or rectum. Such access allows a surgeon or physician to view and/or treat internal portions of the orifice or internal tissues or organs which are accessible through the orifice. These procedures may be for diagnostic purposes, such as visual inspection or the removal of a tissue sample for biopsy, or the procedure may be used for treatment purposes, such as the removal of a polyp or tumor or the restructuring of tissue. While these procedures can be done using regular open surgery, endoscopy usually involves less pain, less risk, less scarring, and faster recovery of the patient.

[0004] Endoscopy is typically performed with the use of an endoscope, a small circular tube containing optical components. Traditional endoscopes comprise a small diameter "snake-like" insertion tube having a distal end which is inserted into the orifice to the desired internal location. Fiber optics extend through the insertion tube and terminate at the distal end to allow axial viewing from the distal end. Images of the internal location near the distal end of the endoscope are transmitted to a video monitor for the physician to view. A control handle allows the endoscopist to control the direction of the scope and in some cases, permits the actuation of air, water and suction utilities that may be required for the endoscopy procedure.

[0005] Since endoscopes may be used to perform a treatment at an internal location, some endoscopes are equipped with a lumen through which a surgical instrument or tool may be passed. Generally, the lumen extends through the length of the insertion tube to the distal end so that the end effector of the inserted instrument protrudes from the distal end in the axial direction. Thus, the instrument is directed in parallel to the fiber optics so that the end effector is positioned along the line of view.

[0006] Such endoscopes have a number of constraints which limit their usefulness in performing diagnostic and surgical procedures. To begin, surgical instruments and tools are inserted axially through a working lumen in the endoscope. And, most of these endoscopes only allow axial and rotational movement of the tool beyond the distal end. This helps to maintain positioning of the tool within the field of view of the endoscope which is also directed axially. However, this limits the variety and complexity of procedures that may be performed. For example, procedures which involve tissue approximation pose great difficulty since only one portion of tissue may be grasped at a time and lateral, rather than axial, movement may be required. Although steering of an axially inserted tool may be possible near the distal end, such steering typically positions the end effector of the tool out of the field of view of the axially directed scope.

[0007] A similar minimally invasive procedure which overcomes some of these constraints is laparoscopy. In laparoscopy, the interior of the body is accessed and visualized through a small incision. When accessing the abdomen, the incision is usually made in the navel. Laparoscopy was initially used by gynecologists to diagnose and treat conditions relating to the female reproductive organs: uterus, fallopian tubes, and ovaries. It is now used for a wider range of procedures, including operations that in the past required open surgery, such as removal of the appendix (appendectomy) and gallbladder removal (cholecystectomy). Laparoscopy is performed with a device which allows the surgeon or physician to view and/or treat internal tissues or organs which are accessible through the incision. This device is the same or similar to an endoscope, sometimes referred to as a laparoscope. The device comprises a small diameter insertion tube having a distal end which is inserted into the incision to the desired internal location. Fiber optics extend through the insertion tube and terminate at the distal end to allow axial viewing from the distal end. Images of the internal location near the distal end are transmitted to a video monitor for the physician to view. Sometimes, access through an incision creates a shorter, straighter and more direct access path than through an orifice. Therefore, some laparoscopes may have a shorter and stiffer insertion tube than some endoscopes.

[0008] Although laparoscopes suffer from many of the same limitations as endoscopes, laparoscopy allows additional surgical instruments and tools to be inserted through separate incisions to perform procedures. Proper location of the incisions can allow instruments to be positioned in various directions. Therefore, movement and viewing is not limited to the axis of the laparoscope and simultaneous viewing of the tissues and the instruments may be more readily achieved during the procedure. However, these additional benefits are achieved at the cost of increased invasiveness. Access paths must be created for the instruments with the use of trocars requiring general anesthesia, risk of complications and infection, and increased overall recovery time for the access paths to heal. In addition, access may be difficult or contraindicated in some patients, particularly in the morbidly obese.

[0009] Thus, it would be desired to provide an improved methods, devices and systems to perform minimally invasive procedures. Particularly, methods, devices and systems which would provide the benefits of endoscopy, such as lower invasiveness and access to deeply internal locations, with the benefits of laparoscopy, such as the use of multiple instruments with movement and viewing along various axes. The devices and systems would be reliable, convenient and easy to use with improved outcomes for patients due to reduction in invasiveness and therefore risk, cost and recovery time. At least some of these objectives will be met by the invention described hereinafter.

BRIEF SUMMARY OF THE INVENTION

[0010] The present invention provides systems, devices and methods for endoscopic procedures involving tissue

manipulations beyond the capabilities of traditional endoscopic instruments. Embodiments of the systems include an elongated main body having a scope therethrough and at least one steerable tool arm which extends from the distal end of the main body. In preferred embodiments, the system includes two tool arms, each arm steerable to form a curve laterally outward which then bends laterally inward so that the arms form a an angular or boomerang shape. In addition, end effectors extend from the distal ends of each arm for use in manipulation of tissue. The angular shape brings the end effectors together in view of the scope for cooperative movements which are continuously visible by the surgeon through the scope. In addition, the tool arms may be steerable in any additional direction and may be rotateable to allow grasping, pulling, tugging, elevation and more complex manipulation of tissue. Thus, the systems and devices of the present invention provide many of the capabilities of open surgery or laparoscopic surgery with an endoscopic approach.

[0011] In a first aspect of the present invention, the tool arm(s) comprise a shaft having a proximal end and a deflectable or steerable distal end. In some embodiments, the steerable distal end will be laterally stabilized so that the distal end may be steered, i.e. bent or manipulated, within a plane but will resist deflection outside of the plane during use. The steering plane will generally be parallel to a central axis of the scope but may be rotated by rotation of the tool arm. In this way, the arm(s) will maintain stable positioning within the field of view of the scope and will resist accidental deflection outside of the field. It may be appreciated that the tool arm may also be translated axially within the stabilized plane while maintaining viewing within the field.

[0012] A preferred structure for achieving lateral stability comprises a plurality of adjacent links. Usually, the links are pivotally attached by hinged structures. In some embodiments, the hinged structures comprise pivot pins which are disposed parallel to one another and generally transverse to the stabilized plane in which the arm may be steered. In other embodiments, the hinged structures comprise male and female bearing surfaces which define axes, wherein the axes are disposed in parallel to limit deflection of the distal section to within the plane. A variety of other structures are also available to provide lateral stability, such as deployment frames, various shaped linkages connected by reinforcements or pullwires, and slotted tubes, to name a few.

[0013] Typically, the distal end includes at least two steerable sections, wherein a distal-most steerable section includes a tip section which curves in a first direction and wherein an intermediate steerable section includes a base which curves in the opposite direction, where both curves are in the stabilized plane. In some embodiments, the tip section curve has a radius which is greater than that of the curve of the base. To achieved such curvatures, the adjacent links may be shaped to allow substantially continuous deflection. Or, the adjacent links may be shaped so that the steerable distal end is deflectable to form a predetermined curvature wherein the arm is then restricted from further deflection.

[0014] Means for selectively deflecting the distal section of the tool arm(s) often comprise at least one pullwire or one pushwire. Such pull or pushwires may be present in any quantity and arrangement. The means for selectively deflecting the distal section can further include at least one spring which is configured to straighten the distal section in opposition to the pullwire or pushwire.

[0015] In some embodiments, the tool arm includes an end effector disposed at its distal end. A wide variety of end effectors may be used depending on the procedure or tissue manipulations which are desired. For example, end effectors may include but are not limited to knives, needles, sutures, staplers, fasteners, clippers, electrosurgical or hemostatic cutters and coagulators, laser welders, cryosurgery instruments, secondary scopes, forceps, lasers hooks, tongs, graspers, retractors, probes, clamps, scissors, tissue approximation devices and suction applicators. Alternatively, the tool arm may include a tool deployment lumen through which a tool having an end effector may be passed. In these embodiments, the tool arm may include a steering cuff arranged for passage of the tool therethrough so that manipulation of the tool within the steering cuff steers the distal end of the tool arm. Thus, in either case, manipulation of the end effector and the tool arm may be interconnected.

[0016] In another aspect of the present invention, the elongated main body has a distal end, a proximal end, and an arm guide lumen extending through at least a distal section of the elongated main body. In preferred embodiments, the elongated main body has a viewing scope lumen extending therethrough and terminating in the distal tip. The arm guide lumens and the viewing scope lumen may be arranged in any suitable fashion within the main body. For example, when the elongated main body has a second arm guide lumen, the distal terminations of the two arm guide lumens and the one viewing scope lumen may be arranged in a generally triangular pattern on the distal tip of the main body. Alternatively, the lumens may be aligned, wherein the viewing scope lumen is disposed between the arm guide lumens.

[0017] Typically, at least the distal section of the elongated main body is steerable. In some embodiments, the elongated main body comprises a first section and a second section disposed proximally of the first section, and the first and second sections are independently lockable. Thus, the first section may be lockable while the second section remains steerable. Such steering may be achieved with means for selectively deflecting the second section within at least a single plane. This may include retroflexion wherein the distal end of the main body is directed toward the proximal end. In some embodiments, the distal section of the elongated main body comprises a plurality of adjacent links to allow for such steering.

[0018] Typically, at least the distal section of the elongated main body has a generally cylindrical exterior wherein the arm guide lumen does not extend out of the cylindrical exterior. And, the arm guide lumen terminates at a distal tip of the elongated main body so that the tool arm advances through the distal tip. Likewise, as mentioned previously, the elongated main body typically has a viewing scope lumen extending therethrough and terminating in the distal tip.

[0019] In yet another aspect of the present invention, the tool arms may have a distal end which is steerable by a variety of mechanisms. For example, the distal end may be comprised of a flexible tube having at least one pullwire attached thereto so that manipulation of the at least one pullwire deflects the steerable distal end. Or, the tool arm

may have a steerable distal end which comprises a flexible tube having shape memory material so that emergence of the steerable distal end from the distal tip of the main body allows deflection of the steerable distal end to a shape memory position. Or, the tool arm may further comprise a deployment frame extending from the distal tip of the main body, the frame comprising at least two supports each attached to one of the at least two tool arms so that manipulation of the deployment frame deflects the attached tool arms.

[0020] In an additional embodiment of the present invention, the endoluminal tool deployment system may be comprised of an elongated main body having a distal end, a proximal end, and at least two arm guide lumens extending over or through at least a distal section of the elongated main body, wherein said arm guide lumens extend fully to a distal tip of the main body, and at least two tool arms adapted to extend through the arm guide lumens of the elongated main body, said tool arms emerging from the distal tip of the main body.

[0021] In still another aspect of the present invention, the endoluminal tool deployment system comprises an elongated main body having a distal end, a proximal end, and an arm guide lumen extending through at least a distal section of the elongated main body, wherein at least the distal section comprises a plurality of adjacent links. The system further includes a means for selectively deflecting the distal section within at least a single plane, and at least one tool arm adapted to extend through the arm guide lumen of the elongated main body.

[0022] In a further aspect of the present invention, a method is provided for deploying one or more tools in an anatomical space. In a preferred embodiment, the method comprises introducing a distal end of a main body to said anatomical space, advancing a tool arm from a tool deployment lumen in said main body into said anatomical space, deflecting and positioning the tool arm to locate a distal tip thereof adjacent to a target location within the anatomical space, wherein a distal section of the arm is curved and laterally stabilized in a single plane, and advancing a tool through a lumen of the tool arm to the target location.

[0023] In some embodiments, deflecting and position comprises tensioning a plurality of adjacent hinged links within the distal section of the tool arm. The adjacent hinged links may be joined by hinge pins which are disposed perpendicularly to the single plane such that the pins stabilize the distal section and inhibit deflection outside of the single plane. The method may further comprise viewing the target location through a viewing scope disposed in the main body, wherein the tool arm extends axially from a distal tip of the main body from a location adjacent to the viewing scope.

[0024] Other objects and advantages of the present invention will become apparent from the detailed description to follow, together with the accompanying drawings.

BRIEF DESCRIPTION OF THE DRAWINGS

[0025] **FIG. 1** illustrates an embodiment of a system of the present invention.

[0026] **FIG. 2** illustrates the system of **FIG. 1** in an assembled arrangement.

[0027] **FIG. 2A** depicts the cross-section of the system of **FIG. 2**, and **FIG. 2B** depicts an alternative cross-section.

[0028] **FIGS. 3A-3D, 4-6** illustrate possible movements of the steerable distal ends of the tool arms.

[0029] **FIGS. 7A-7B** illustrate the use of an embodiment of the system to perform a mucosectomy.

[0030] **FIGS. 8A-8C** illustrate an embodiment of the main body in a variety of positions.

[0031] **FIG. 9A** shows an embodiment of the shaft of the main body comprised of a multiplicity of nestable elements, and **FIG. 9B** provides an exploded view of these elements.

[0032] **FIGS. 9C-9E** provide cross-sectional views of various nestable elements.

[0033] **FIG. 10A** provides an exploded view of nestable elements having a pullwire extending through their centers and **FIG. 10B** provides a cross-sectional view one of the nestable elements.

[0034] **FIG. 10C** illustrates the nestable elements of **FIG. 10A** with the inclusion of liners and **FIG. 10D** provides a cross-sectional view of one of the nestable elements.

[0035] **FIG. 11** illustrates an embodiment of a tool arm.

[0036] **FIGS. 12A-12B, 13A-13B, 14** illustrate embodiments of adjacent links disposed at the distal end of a tool arm.

[0037] **FIG. 15** illustrates examples of possible deflections or movements of an embodiment of the tool arm.

[0038] **FIGS. 16A-16B** illustrate another embodiment of a tool arm comprising a plurality of adjacent links.

[0039] FIGS. **17, 17A-17C** illustrate an embodiment of a tool arm which is steerable to a predetermined arrangement.

[0040] **FIGS. 18A-18B** illustrate the creation of distinct curvatures achieved by separate pullwires.

[0041] **FIG. 19** illustrates two tool arms steered to a predetermined arrangement.

[0042] **FIG. 20** illustrates an embodiment including both links which are steerable to a predetermined arrangement and links which are unrestrictedly steerable.

[0043] **FIGS. 21A-21B** illustrate an embodiment of a tool arm comprised of a slotted tube.

[0044] **FIGS. 21C-21D** illustrate an embodiment of a tool arm comprised of a tube wherein a pullwire is positioned on the outside of the tube.

[0045] **FIGS. 21E-21F** illustrate an embodiment of a tool arm comprised of a polymer wall co-extruded with shape memory material.

[0046] **FIGS. 21G-21H** illustrate a mechanism for steering the tool arms including a deployment frame.

[0047] **FIGS. 22A-22B, 23, 24** illustrate embodiments of the shaft of the main body.

[0048] **FIGS. 25A-25B** provide a view of the proximal end of an embodiment of the main body wherein two tool arms are present, each including a steering cuff.

[0049] FIGS. **26**, **27**A-**27**B, **28**A-**28**B illustrate embodiments of a steering cuff.

[0050] FIGS. **29**, **29**A-**29**D illustrate embodiments of a tool having an end effector in the form of various types of scissors.

[0051] **FIG. 30** illustrates an embodiment of the tool having an end effector in the form of gator toothed graspers.

[0052] **FIG. 31** illustrates an embodiment of the tool having an end effector in the form of an articulatable grasper.

[0053] **FIGS. 32-36** illustrate embodiments of the tool having end effectors in the form of various shaped retractors.

[0054] **FIGS. 37A-37B** illustrate grasping hooks inserted through auxiliary lumens in the main body and **FIG. 37C** illustrates a fixation device which may be deployed by the tool arms when such grasping hooks are used in a plication procedure.

[0055] **FIGS. 38, 39, 40**A-**40**B illustrate alternative tools passed through auxiliary lumens in the main body.

[0056] **FIG. 41** illustrates a tool passed through an arm guide lumen for use in conjunction with a tool arm.

[0057] **FIG. 42** illustrates an arm used to cleanse a portion of the main body, particularly the scope lens.

DETAILED DESCRIPTION OF THE INVENTION

[0058] I. Overview

[0059] An embodiment of a system **2** of the present invention is illustrated in **FIG. 1**. The system **2** includes an elongated main body **10** having a proximal end **12** and a distal end **14** terminating in a distal tip **16**. The main body **10** is used to access an internal target location within a patient's body. Typically, the distal end **14** is passed through a body orifice and one or more naturally occurring body lumens to the target location, such as in endoscopy, while the proximal end **12** remains outside of the body. Therefore, the main body **10** has a deflectable and/or steerable shaft **20**, either due to choice of material or design of the shaft **20** to include links, hinges, coils or other similar structures to allow deflection. Thus, **FIG. 1** illustrates the main body **10** in a deflected position wherein the body **10** includes curvatures. Such deflection and/or steering may be useful in traversing body lumens to the target location and is achievable by manipulation of a handle **22** near the proximal end **12**. It may be appreciated, however, that the system **2** may be used in laparoscopic procedures wherein such deflection and/or steering may be less utilized for placement of the main body **10**. In either case, rigidization of some or all the shaft **20** may be desired, for example to provide a stable visualization platform. Therefore, portions of the shaft **20** of the main body **10** are lockable to maintain a desired shape and provide rigidity, either due to choice of material or design of the shaft **20** to include locking mechanisms, as will be described in later sections.

[0060] The main body **10** also includes at least one arm guide lumen **26** which extends over or through at least a distal section of the main body **10**, typically along the majority of the length of the body **10** as shown. Here in **FIG. 1**, two arm guide lumens **26** are shown, each extending from a position along the shaft **20** near the proximal end **12** to the distal tip **16**. In addition, the main body **10** includes a scope lumen **24** which extends through the shaft **20** to the distal tip **16**.

[0061] The system **2** also includes at least one tool arm **30**, two are shown in **FIG. 1**, each arm **30** of which is insertable through a separate arm guide lumen **26** as indicated by dashed line. Each tool arm **30** has a proximal end **32**, a distal end **34** and a shaft **36** therebetween. The distal end **34** is steerable, such as by manipulation of adjacent links as schematically indicated. Such steerability may be controlled by a steering cuff **35** which is part of the proximal end **32**. The shaft **36** is typically flexible or deflectable to allow deflection of the surrounding main body shaft **20**. Each tool arm **30** additionally includes a tool deployment lumen **38** therethrough.

[0062] In this embodiment, the system **2** also includes at least one tool **40**, two are shown in **FIG. 1**. Each tool **40** includes a distal end **42**, a proximal end **44** and an elongate shaft **46** therebetween to allow passage through the tool deployment lumen **38** of the arm **30**. Each tool **40** has an end effector **48** disposed at the distal end **42** and optionally a handle **50** at the proximal end **44** for manipulation of the end effector **48** from outside the body. The tool **40** is advanced so that the end effector **48** emerges from the distal end **34** of the arm **30**.

[0063] **FIG. 2** illustrates the system **2** of **FIG. 1** in an assembled arrangement. Here, the tool arms **30** are shown inserted through the arm guide lumens **26** of the main body shaft **20**. The steerable distal ends **34** of the arms **30** protrude from the distal end **14** of the main body **10** and the proximal ends **32** of the arms **30** protrude from the proximal end **12** of the main body **10**. As shown, the steering cuffs **35** are located at the proximal ends **32** of the arms **30**. In addition, the tools **40** are shown inserted through the tool deployment lumens **38** so that the end effectors **48** extend beyond the steerable distal ends **34** of the arms **34**. Likewise, the proximal ends **44** of the tools **40** with handles **50** are shown protruding from the steering cuffs **35**. Movement of the tools **40** against the steering cuffs **35** will actuate steering of the distal ends **34** of the arms **30**, as will be described in later sections.

[0064] **FIG. 2A** provides a cross-sectional view of system **2** of **FIG. 2**. Since the shaft **20** of the main body **10** has a generally cylindrical exterior in this embodiment, the cross-section of the shaft **20** has a circular shape. It may be appreciated that cylindrical shafts may alternatively have an elliptical, oval or oblong cross-section. The shaft **20** has an outer diameter in the range of about 5 to 25 mm, preferably approximately 14 mm. The shaft **20** has a wall **21** with a thickness in the range of about 0.5 to 5 mm, preferably about 2-3 mm, defining an inner central lumen **23**. Within the wall **21** lies various pushwires or pullwires **96**, hereinafter referred to as pullwires, for steering the main body **10** which may be present in a variety of quantities and arrangements. Alternatively, the pullwires **96** may be present within the central lumen **23**. At least one arm guide lumen **26**, two are shown, extend through the central lumen **23**. Each arm guide lumen **26** has an inner diameter in the range of about 0.5 to 5 mm, preferably about 4 mm. Positioned within the lumens **26** are the shafts **36** of the tool arms **30**. And, likewise, positioned within the shafts **36** are the tools **40**. **FIG. 2A** also illustrates the scope lumen **24** which has an inner diameter

in the range of about 2 to 10 mm, preferably about 4 mm. In this embodiment, the two arm guide lumens **26** and the scope lumen **24** are arranged in a generally triangular pattern which is maintained to the distal tip **16**, however any suitable arrangement may be used which allows viewing of the tool arms, particularly the end effectors, by the scope. For example, **FIG. 2B** illustrates a cross-section of an embodiment wherein the shaft **20** has an oval shape and the arm guide lumens **26** and the scope lumen **24** are generally aligned. Here, the scope lumen **24** is disposed between the arm guide lumens **26** to facilitate viewing of the tool arms **30**. Also illustrated in **FIGS. 2A and 2B** are additional lumens which may be used for various needs. For example, an irrigation/suction lumen **60**, an insufflation lumen **56** and an auxiliary lumen **58** may be present, each having an inner diameter in the range of about 0.5 to 5 mm, preferably about 2 mm. The auxiliary lumen **58** may be utilized for a variety of uses, such as insertion of additional tools, such as a macerator, a grasping tool, a cutting tool or a light source, to name a few, for use in conjunction with the end effectors present at the distal ends of the arms **30** or the distal ends of the tools **40** inserted through the arms **30**.

[**0065**] **FIGS. 3A-3D** illustrate a series of movements of the steerable distal ends **34** of the tool arms **30**. This series serves only as an example, as a multitude of movements may be achieved by the distal ends **34** independently or together. **FIG. 3A** illustrates the distal tip **16** of the main body **10**. The scope lumen **24** is shown along with two arm guide lumens **26** terminating at the distal tip **16** and forming a triangular pattern as illustrated in **FIG. 2A**. **FIG. 3B** illustrates the advancement of the distal ends **34** of the tool arms **30** through the arm guide lumens **26** so that the arms **30** extend beyond the distal tip **16**. **FIGS. 3C-3D** illustrate deflection of the arms **30** to a preferred arrangement. **FIG. 3C** illustrates deflection of the arms **30** laterally outward. This is achieved by curvature in the outward direction near the base **64** of the steerable distal end **34**. **FIG. 3D** illustrates deflection of the tip section **66** of the distal end **34** laterally inward achieved by curvature in the inward direction so that each arm **30** forms a hook shape. By facing the tip sections **66** of the arms **30** toward each other as shown, the tip sections **66** are positioned directly in the path of the scope lumen **24**. Therefore, when a scope **28** is positioned within the scope lumen **24**, the tip sections **66** of the tool arms **30** and any tools **40** advanced therethrough, will be visible through the scope **28**. In **FIGS. 3C-3D**, deflection of the arms **30** is achieved with the use of adjacent links **62** in the areas of desired curvature. Embodiments of such links **62** and other mechanisms of deflection will be discussed in later sections. Further, the deflection of **FIGS. 3A-3D** are shown to be within a single plane. However, various embodiments include deflection in multiple planes. Likewise, the arms **30** are shown to be deflected simultaneously in **FIGS. 3A-3D**, however the arms **30** may be deflected selectively or independently.

[**0066**] **FIGS. 4-6** illustrate additional possible movements of the tool arms **30**. For example, **FIG. 4** illustrates axial movement of the tool arms **30**. Each tool arm **30** can independently move distally or proximally, such as by sliding within the tool deployment lumen **38**, as indicated by arrows. Such movement maintains the arms **30** within the same plane yet allows more diversity of movement and therefore surgical manipulations. **FIG. 5** illustrates rotational movement of the tool arms **30**. Each tool arm **30** can independently rotate, such as by rotation of the arm **30** within the tool deployment lumen **38**, as indicated by circular arrow. Such rotation moves the arm **30** through a variety of planes. By combining axial, lateral and rotational movement, the arms **30**, and therefore the tools **40** positioned therethrough, may be manipulated through a wide variety of positions in one or more planes.

[**0067**] **FIG. 6** illustrates further articulation of the tool arms **30**. In some embodiments, the arms **30** are deflectable to form a predetermined arrangement, such as illustrated in **FIG. 3D**. Typically, when forming the predetermined arrangement, the arms **30** are steerable up until the formation of the predetermined arrangement wherein the arms **30** are then restricted from further deflection. In other embodiments, the arms are deflectable to a variety of positions and are not limited by a predetermined arrangement. Such an embodiment is illustrated in **FIG. 6** wherein the arms **30** articulate so that the tip sections **66** curl inwardly toward the distal tip **16** of the main body **10**. Again, the tip sections **66** are positioned in front of the scope lumen **24** and scope **28** for viewing. Typically, the tip sections **66***a* are positioned on opposite sides of a central axis **31** of the scope **28**, wherein the field of view (indicated by arrow **29**) spans up to approximately 140 degrees, approximately 70 degrees on each side of the central axis **31**. In addition, the depth of field is typically in the range of approximately 1-10 cm.

[**0068**] As mentioned previously, the endoluminal tool deployment system **2** of the present invention may be used to access a various internal tissues or organs to perform a wide variety of surgical procedures. **FIGS. 7A-7B** illustrate the use of an embodiment of the system **2** to perform a mucosectomy, or removal of a portion of the mucosa and/or submucosa of the stomach. **FIG. 7A** illustrates advancement of the main body **10** through the esophagus E to the stomach S. The main body **10** is then steered to a desired position within the stomach S and the stomach mucosa M is visualized through the scope **28** at the distal tip **16**. Referring to **FIG. 7B**, the tool arms **30** are then advanced through the main body **10** and articulated. As mentioned, tools **40** may be advanced through the tool arms **30** or an end effector **48** may be disposed at the distal end of each arm **30**. Here, a grasper **80** is disposed at the distal end of one arm **30** and a cutter **81** is disposed at the distal end of the other arm **30**. The grasper **80** is used to grasp a portion of the mucosa M. The grasped portion of mucosa M can then be elevated by rotation or manipulation of the tool arm **30**. This allows safe resection of the portion of mucosa M by cutting with the use of the cutter **82**, as shown. Manipulation and resection of the tissue is visualized throughout the procedure through the scope **28** which is aligned with the tip sections **66**, and therefore end effectors **48**.

[**0069**] It may be appreciated that the systems, methods and devices of the present invention are applicable to diagnostic and surgical procedures in any location within a body, particularly any natural or artificially created body cavity. Such locations may be disposed within the gastrointestinal tract, urology tract, peritoneal cavity, cardiovascular system, respiratory system, trachea, sinus cavity, female reproductive system and spinal canal, to name a few. Access to these locations may be achieved through any body lumen or through solid tissue. For example, the stomach may be accessed through an esophageal approach, the heart through a port access approach, the rectum through a rectal

approach, the uterus through a vaginal approach, the spinal column through a port access approach and the abdomen through a port access approach.

[0070] A variety of procedures may be performed with the systems and devices of the present invention. The following procedures are intended to provide suggestions for use and are by no means considered to limit such usage: Laryngoscopy, Rhinoscopy, Pharyngoscopy, Bronchoscopy, Sigmoidoscopy (examination of the sigmoid colon, the sigmoid colon is the portion that connects the descending colon to the rectum; primarily for diagnostic purposes, however a biopsy procedure and trans anal micro surgery may be performed for removing tumors), Colonoscopy (examination of colon; for the removal of polyps and tumors or for biopsy), and Esophagogastroduodenoscopy (EGD) which enables the physician to look inside the esophagus, stomach, and duodenum (first part of the small intestine). The procedure might be used to discover the reason for swallowing difficulties, nausea, vomiting, reflux, bleeding, indigestion, abdominal pain, or chest pain.

[0071] In addition, endoscopic retrograde cholangiopancreatography (ERCP) may be achieved which enables the surgeon to diagnose disease in the liver, gallbladder, bile ducts, and pancreas. In combination with this process endoscopic sphincterotomy can be done for facilitating ductal stone removal. ERCP may be important for identification of abnormalities in the pancreatic and biliary ductal system. Other treatments include Cholecystectomy (removal of diseased gallbladder), CBD exploration (for common bile duct stones), appendicectomy (removal of diseased appendix), hernia repair TAP, TEPP and other (all kinds of hernia), fundoplication and HISS procedures (for gastro esophageal reflux disease), repair of duodenal perforation, gastrostomy for palliative management of late stage upper G.I.T. carcinoma), selective vagotomy (for peptic ulcer disease), splenectomy (removal of diseased spleen), gastric restrictive and malabsorbtive procedures (for morbid obesity), upper and lower G.I. endoscopies (diagnostic as well as therapeutic endoscopies), pyloroplastic procedures (for children's congenital deformities), colostomy, colectomy, adrenalectomy (removal of adrenal gland for pheochromocytoma), liver biopsy, gastrojejunostomy, subtotal liver resection, gastrectomy, small intestine partial resections (for infarction or stenosis or obstruction), adhesions removal, treatment of rectum prolaps, Heller's Myotomy, devascularization in portal hypertension, attaching a device to a tissue wall and local drug delivery to name a few.

[0072] II. Main Body

[0073] As mentioned previously, the system **2** of the present invention includes an elongated main body **10** having a proximal end **12** and a distal end **14** terminating in a distal tip **16**. An embodiment of the main body **10** is illustrated in **FIG. 8A** in a straight configuration. However, the main body **10** is used to access an internal target location within a patient's body so the main body **10** has a deflectable and/or steerable shaft **20**. Thus, **FIG. 8B** illustrates the main body **10** having various curvatures in its deflected or steered state. In preferred embodiments, the main body **10** is steerable so that the main body **10** may be advanced through unsupported anatomy and directed to desired locations within hollow body cavities. In some embodiments, the main body **10** includes a first section **90** which is proximal to a second section **92**, as indicated in **FIG. 8B**. Although both sections **90**, **92** are steerable, the first section **90** may be locked in place while the second section **92** is further articulated. This is illustrated in **FIG. 8C**, wherein the first section **90** is shown in a locked position unchanged from **FIG. 8B** and the second section **92** is shown in various retroflexed positions. In retroflexion, the second section **92** is curved or curled laterally outwardly so that the distal tip **16** is directed toward the proximal end **12** of the main body **10**. Optionally, the second section **92** may also be locked, either in retroflexion or in any other position.

[0074] Steering and locking may be achieved by any suitable mechanisms. In some embodiments, the shaft **20** comprises a multiplicity of nestable elements **260**, as illustrated in **FIG. 9A**. **FIG. 9B** provides an exploded view of the nestable elements **260** of **FIG. 9A**. Here it can be seen that the elements **260** are disposed so that a distal surface **262** of one element **260** coacts with a proximal surface **264** of an adjacent element. Each of the nestable elements **260** includes one or more pullwire lumens **98** through which pullwires **96** pass. The pullwires **96** are used to hold the elements **260** in nesting alignment and to provide steering and locking. The pullwires **98** preferably are made from a superelastic material, e.g. nickel titanium alloy, to provide flexibility, kink-resistance and smooth movement of the pullwires **96** through the pullwire lumens **98**. Alternatively, the pullwires **96** may be made from braided stainless steel, a single stainless steel wire, poly-para-phenylene terephthalamide (such as Kevlar®), a high tensile strength monofilament thread, combinations thereof or any suitable materials.

[0075] Generally, the adjacent surfaces **262**, **264** are contoured to mate so that when the pullwires **96** are relaxed, surfaces **262**, **264** can rotate relative to one another. This allows the shaft **20** to form curvatures throughout its length in any direction. Each pullwire **96** is fixed at its distal end to a specific element **260** along the shaft **20** or to the distal tip **16**. When tension is applied to a specific pullwire **96**, a curvature forms in the shaft **20** proximal to the fixation point, thus steering the shaft **20**. The pullwires **96** may be arranged in various patterns to achieve steering in various directions. For example, **FIG. 9C** is a cross-sectional view of the shaft **20** in the first section **90** of **FIG. 8B**. Here, eight pullwires **96** (four pullwires **96***a* and four pullwires **96***b*) are shown passing through the wall **21**. Four pullwires **96***a* terminate at the distal end of the first section **90** and are used to steer the first section **90**. Since the pullwires **96***a* are equidistantly positioned, applying tension to the pullwires **96***a*, either individually or in combination, steers the first section **90** in any desired direction. The first section **90** may be locked in place by holding the tension in the pullwires **96***a* using any suitable mechanisms. For example, tension may be applied to the pullwires **96** simultaneously until the elements **260** are compressed to a state in which they are locked by friction wherein the tension is held.

[0076] **FIG. 9D** is a cross-sectional view of the shaft **20** in the second section **92** of **FIG. 8B**. Here, four pullwires **96***b* are shown passing through the wall **21**. These pullwires **96***b* extended through the first section **90**, as indicated in **FIG. 9C**, and terminate near the distal tip **16**. Since the pullwires **96***b* are equidistantly positioned, applying tension to the pullwires **96***b*, either individually or in combination, steers the second section **92** in any desired direction. Since the

pullwires **96***b* also pass through the first section **90**, such steering may also effect the curvature in the first section **90** when the first section is not locked. However, such effects are minimal, may be counteracted or compensated for by steering in the first section **90**, and may be avoided by locking. The second section **92** may be also be locked in place by holding the tension in the pullwires **96***b* using any suitable mechanisms.

[**0077**] In this embodiment, the wall **21** extends continuously from the proximal end **12** to the distal end **14** with the first and second sections **90**, **92** determined by the termination points of the pullwires **96** which extend therethrough. Alternatively, the first and section sections **90**, **92** may be comprised of separate shafts which are coaxially positioned adjacent to one another.

[**0078**] In the embodiment illustrated in **FIG. 9B**, the nestable elements **260** have a central lumen **23** which passes through the length of the main body **10**. Instruments or tools may be passed through this lumen **23**, as indicated in **FIGS. 9C-9D**, or tubes may be present within the lumen **23** through which instruments or tools may be passed. In preferred embodiments, the nestable elements **260** have holes formed therein so that lumens are formed by alignment of the holes when the elements **260** are stacked. For example, **FIG. 9E** provides a cross-sectional view of a nestable element **260** illustrating the holes formed therein which serve as lumens. As shown, a scope lumen **24**, arm guide lumens **26**, and auxiliary lumens **58** extend through the center of the element **260** while pullwire lumens **98** are located around the periphery. It may be appreciated that pullwire lumens **98** may also extend through the center of the element **260**. For example, **FIG. 10A** illustrates an embodiment having a pullwire **96** which extends through the center of the stacked nestable elements **260**. **FIG. 10A** provides an exploded view of the nestable elements **260** wherein the elements **260** are disposed so that a distal surface **262** of one element **260** coacts with a proximal surface **264** of an adjacent element. As shown, each of the nestable elements **260** includes a pullwire lumen **98** through its center. **FIG. 10B** provides a cross-sectional view of a nestable element **260** of **FIG. 10A**. As shown, the nestable element **260** includes a locking pullwire lumen **98***c* having a pullwire **96***c* therethrough in the center of the element **260** surrounded by various other lumens, such as a scope lumen **24**, arm guide lumens **26**, auxiliary lumen **58** and various pullwire lumens **98** used for steering. Once the elements **260** are positioned in a desired arrangement, the shaft **20** may be locked in place by the central pullwire **96***c*. Applying tension to the pullwire **96***c* compresses the elements **260** to a state in which they are locked by friction wherein the tension is held.

[**0079**] In addition, liners **266** may be passed through any of the lumens of the stacked nestable elements **260**. Such liners **266** form create a continuous lumen connecting the lumen holes of the nestable elements **260**. **FIG. 10C** illustrates the nestable elements **260** of **FIG. 10A** with the inclusion of liners **266** passing through, for example, the arm guide lumens **26**. Likewise, **FIG. 10D** provides a cross-sectional view of a nestable element **260** of **FIG. 10C**. Here, liners **266** are shown positioned through the nestable element **260** forming lumens **24**, **26**, **58** therethrough. It may also be appreciated that liners **266** may extend through pullwire lumens **98** as well. The liners **266** may be coated on their luminal surface with a hydrophilic coating for reducing friction or the liners **266** may be comprised of a lubricious polymer such as Teflon®, fluoroethylene polymer (FEP) or the like.

[**0080**] It may be appreciated that the shaft **20** of the main body **10** may have any structure suitable for delivering the tool arms **30** to the desired location within the body. Exemplary embodiments of such structures are described above and provided in co-pending U.S. patent application Ser. No. 10/281,462 filed Oct. 25, 2002, which is a continuation in part of U.S. patent application Ser. Nos. 10/173,203, 10/173,227, 10/173,238 and 10/173,220, all of which were filed on Jun. 13, 2002 and herein incorporated by reference for all purposes. Also of interest and incorporated by reference for all purposes are co-pending U.S. patent application Ser. Nos. 10/281,461 and 10/281,426 each filed on Oct. 25, 2002. In addition, it may be appreciated that the main body **10** may be comprised of a traditional endoscope or laparoscope through which one or more tool arms **30** may be passed. Exemplary embodiments of traditional endoscopes are provided in U.S. Pat. Nos. 3,948,251; 4,036,218; 4,201,198; 4,224,929; 4,988,171; 5,020,539; 5,035,231; 5,068,719; 5,170,775; 5,172,225; 5,187,572; and 5,196,928, all of which are herein incorporated by reference for all purposes.

[**0081**] III. Tool Arms

[**0082**] As mentioned previously, system **2** also includes at least one tool arm **30**, each arm **30** of which is insertable through a separate arm guide lumen **26** in the main body **10**. As shown in **FIG. 11**, each tool arm **30** has a proximal end **32**, a distal end **34** and a shaft **36** therebetween. The distal end **34** is steerable, such as by manipulation of adjacent links **62** as schematically indicated. Such steerability may optionally be controlled by a steering cuff **35**, disposed within the proximal end **32**. Each tool arm **30** additionally includes a tool deployment lumen **38** therethrough.

[**0083**] A. Distal End

[**0084**] **FIGS. 12A-12B** illustrate an embodiment of adjacent links **62** disposed at the distal end **34** to allow steerability of the arm **30**. Here, links **62** are pivotally connected by hinge structures **100**. As shown in **FIG. 12A**, the links **62** are shaped so that connection by the hinge structures **100** creates gaps **102** between the links **62** directly opposite to the hinge structures **100**. A pullwire **96** is shown extending through the links **62** and terminating at a fixation point **104**. Referring now to **FIG. 12B**, retraction of the pullwire **96** draws the links **62** together, minimizing the gaps **102** between the links **62**. Due to the shape and arrangement of the links **62**, this movement creates a curve in the arm **30** as shown. The distal end **34** may be steered to have any curvature between substantially straight and a maximum curvature wherein the gaps **102** are completely closed or another limiting feature is established. In some embodiments, up to 360 degree curvature of the distal end **34** is possible. The distal end **34** may be returned to a straightened position by advancement of the pullwire **96** or by the presence of a spring which will straighten the distal end **34** by recoil force.

[**0085**] **FIGS. 13A-13B** illustrate a similar embodiment of adjacent links **62** disposed at the distal end **34** to allow steerability of the arm **30**. Again, links **62** are pivotally connected by hinge structures **100**. However, as shown in **FIG. 13A**, the links **62** are shaped so that connection by the

hinge structures **100** creates gaps **102** between the links **62** on both sides of the hinge structures **100**. A pullwire **96** is shown extending through the links **62** and terminating at a fixation point **104**. Referring now to **FIG. 13B**, retraction of the pullwire **96** draws the links **62** together, minimizing the gaps **102** between the links **62** along the pullwire **96** and maximizing the gaps **102** on the opposite side of the hinge structures **100**. Due to this shape and arrangement of the links **62**, this movement creates a curve in the arm **30** as shown. The distal end **34** may also be returned to a straightened position by advancement of the pullwire **96** or by the presence of a spring which will straighten the distal end **34** by recoil force. However, in this embodiment, the distal end **34** may be deflected or curved in the opposite direction by continued advancement of the pullwire **96**. Advancement of the pullwire **96** minimizes the gaps **102** on the opposite side of the hinge structures **100** causing a curvature in the opposite direction. Likewise, a spring may be present to straighten the distal end **34** from a curvature in this opposite direction.

[**0086**] **FIG. 14** illustrates an embodiment similar to the embodiment illustrated in **FIG. 13A-13B**. The links **62** are shown pivotally connected by hinge structures **100**. Here the hinge structures **100** comprise pivot pins **106** which are arranged in parallel to limit deflection to a single plane. In some embodiments, the hinge structures comprise male and female bearing surfaces which define axes, wherein the axes are disposed in parallel to limit deflection of the distal section to within the single plane. The links **62** are shaped so that connection by the pivot pins **106** creates gaps **102** between the links **62**. Closure of the gaps **102** on one side of the pivot pins **106** simultaneously opens gaps on the other side of the pins **106**. **FIG. 14** also illustrates an end effector **48** of a tool **40** which has been advanced through the tool deployment lumen **38** of the arm **30**.

[**0087**] **FIG. 15** illustrates examples of possible deflections or movements of the tool arms **30**. Here, two arms **30** are shown emerging from the distal tip **16** of the elongated main body **10**. The distal end **34** of each arm **30** is steerable and comprised of a plurality of adjacent links **62**. The arm **30** on the left is shown steered to a position wherein the tip section **66** is curled inwardly forming an almost complete circular shape. In contrast, the arm **30** on the right is shown steered to a position wherein the tip section **66** is deflected slightly inwardly forming an arc shape. Thus, the arms **30** may be independently steerable to varying degrees of curvature. Preferably, the arms **30** are steerable inwardly to perform surgical procedures in cooperation and to maintain visibility through the centrally located scope.

[**0088**] **FIGS. 16A-16B** illustrate another embodiment of a tool arm **30** comprising a plurality of adjacent links **62**. Here, the links **62** are comprised of disks **110** having faces which are angled to form gaps **102** between the disks **110** when the disks **110** are stacked. The disks **110** are connected by one or more wires or ribbons **112**. In this embodiment, illustrated in **FIG. 16B**, two ribbons **112** are present, each at diametrically opposite positions within the wall of each of the stacked disks **110** so that the angled faces are aligned between the ribbons **112**. The ribbons **112** may be embedded in the wall, co-molded with the stacked disks or simply advanced through a lumen in the wall. The ribbons **112** maintain relative position of the disks **110** and stabilize the steerable distal end **34** to be deflectable in only a single plane. Also shown in **FIG. 16B**, lumens **114** are present between the ribbons **112** for positioning pullwires **96** therethrough. The pullwires **96** pass through the angled portions of the disks **110** so that application of tension to a pullwire **96** draws the angled faces of the disks **110** together to close the gaps **102** therebetween. This in turn widens the diametrically opposite gaps **102** creating curvature in the stack.

[**0089**] As mentioned previously, in some embodiments, the arms **30** are deflectable to form a predetermined arrangement, such as previously illustrated in **FIG. 3D**. Typically, when forming the predetermined arrangement, the arms **30** are steerable up until the formation of the predetermined arrangement wherein the arms **30** are then restricted from further deflection. **FIG. 17** illustrates an embodiment of such an arm **30** comprising a plurality of adjacent links **62** wherein the arm **30** is steerable to a predetermined arrangement. As shown, the distal end **34** comprises a base **64** which deflects the distal end **34** outwardly and a tip section **66** which deflects inwardly. Between the base **64** and tip section **66** lies a spacer **68** which is rigid. The spacer **68** may be considered a larger elongate link or simply a straight section. Usage of such spacers **68** is optional and may be used to create specific predetermined arrangements. **FIG. 17A** is an enlarged view of the tip section **66** which illustrates the shapes of the links **62** which are pivotally connected by hinge structures **100** formed into the links **62**. Gaps **102** are present on opposite sides of the structures **100** to allow curvature of the distal end **34**. The size of the gaps **102** will vary due to varying sizes and shapes of the links **64** so that closure of the gaps **102** forms a specific curvature. This is most easily seen in **FIGS. 17B-17C**. **FIG. 17B** illustrates links **62** of the base **64** having varying shapes to create gaps **102** of varying size. As shown, a pullwire **96** extends through the links **62** along the gaps **102**. Applying tension to the pullwire **96** draws the links **62** together to close the gaps **102** and to form a predetermined curve as in **FIG. 17C**.

[**0090**] The predetermined arrangement of **FIG. 17** includes curvatures in opposite directions, the base **64** curving laterally outwardly and the tip section **66** curving laterally inwardly. These distinct curvatures may be achieved by separate pullwires **96**. For example, as shown in **FIG. 18A**, a first pullwire **97***a* may be positioned along one side of the tool arm **30** terminating at a fixation point **104***a* located midway along the distal end **34**. The links **62** which lie proximally of this fixation point **104***a* form the base **64**. A second pullwire **97***b* may be positioned along the opposite side of the arm **30** terminating at a fixation point **104***b* located at the tip of the distal end **34**. Generally, the links **62** which lie between the fixation point **104***a* and the fixation point **104***b* form the tip section **66**. Referring now to **FIG. 18B**, by applying tension to the first pullwire **97***a*, the base curves laterally outwardly, and by applying tension to the second pullwire **97***b*, the tip section curves laterally inwardly.

[**0091**] **FIG. 19** illustrates two tool arms **30** which are steered to a predetermined arrangement. Such steering is achieved with the use of pullwires **96** as illustrated in **FIGS. 18A-18B**. Fixation points **104***b* are visible while fixation points **104***a* are hidden within the arms **30**. As shown, the links **62** are varied in size and shape to form this arrangement when tension is applied to the pullwires **96**. For example, the links **62** are generally larger thought the bases

64 and smaller through the tip sections 66. Further, this embodiment includes stabilizers 120 which pass through the arms 30 for stability.

[0092] In some embodiments, the steerable distal end 34 includes both types of links, links which are steerable to a predetermined arrangement and links which are unrestrictedly steerable. For example, FIG. 20 illustrates an embodiment wherein the base 64 is comprised of links 62 which are appropriately shaped and sized to deflect laterally outwardly to form a predetermined arrangement. Such deflection is achieved with a pullwire which is hidden from view and terminates midway along the distal end 34. In this embodiment, the tip section 66 is comprised of links 62 which are appropriately sized and shape to deflect laterally inwardly in an unrestricted fashion. The links 62 of the tip section 66 are hinged together by pivot pins 106 to provide support throughout the unrestricted movement. In addition, a tool 40 having an end effector 48 is shown passed through the tool deployment lumen 38 in the arm 30. Also shown in FIG. 20, the arms 30 are rotated to lie in different planes, a feature which has been described in previous sections.

[0093] It may be appreciated that the embodiments which include links may have any number of links. For example, the steerable distal end 34 may have two links 62 which are hinged together by a hinge structure 100. In this example, the shaft 36 would direct the first link 62 in a first direction and the hinge structure 100 would turn the distal tip 16 towards a second direction. The addition of more linkages 62 would create a smoother curve and/or allow multiple curves throughout the steerable distal end 34.

[0094] Although the previous embodiments of the tool arms 30 have been comprised of a plurality of adjacent links, it may be appreciated that the arms 30 may be comprised of material in any suitable form. For example, each arm 30 may be comprised of a polymeric tube which has been preshaped, such as by heat setting, to form a desired curvature. The polymeric tube is comprised of a material which is sufficiently flexible to allow straightening of the curve for delivery through the arm guide lumen 26 and adequately flexible to allow recoiling of the arm 30 to form the desired curvature upon emergence from the lumen 30.

[0095] In another embodiment, each arm 30 is comprised of a slotted tube, as illustrated in FIGS. 21A-21B. Referring to FIG. 21A, a tube 130 has a series of slots 132 along its length. In this embodiment, the slots 132 are present along one side of the tube 130 however, it may be appreciated that the slots 132 may be present on both sides of the tube or along any portion of the tube which is desired to deflect. Referring back to FIG. 21A, the pullwire 96 is positioned within the tube along the slots 132 and fixed to the tube 130 at a fixation point 104. By applying tension to the pullwire 96, the tube 130 is deflected toward the pullwire 96 as shown in FIG. 21B. The presence of the slots 132 allows the tube 130 to be comprised of a relatively rigid or thick material while deflecting and curving with minimal buckling or impedance by the tube 130. It may be appreciated that the tube 130 of FIGS. 21A-21B may alternatively be a solid-walled tube without slots comprised of a thinner or more flexible material which itself allows deflection and curvature with minimal buckling or impedance. Further, each of the following embodiments illustrating various tool arms 30 may be comprised of solid-walled or slotted tubes, or any other suitable tube construction.

[0096] FIGS. 21C-21D illustrate an embodiment of the arm 30 comprised of a tube 130 wherein a pullwire 96 is positioned on the outside of the tube 130 and fixed to the tube 130 at a fixation point 104. By applying tension to the pullwire 96, the tube 130 is deflected toward the pullwire 96 as shown in FIG. 21D. Since the pullwire 96 is disposed outside of the tube 130, the pullwire 96 forms a tether to the fixation point 104 and does not follow along the surface of the tube 130.

[0097] FIGS. 21E-21F illustrate an embodiment of the arm 30 comprised of a polymer wall co-extruded with shape memory material, such as nitinol wire. FIG. 21E illustrates the arm 30 in a straightened position, wherein the arm 30 is passed through the arm guide lumen 26, and a curved position, wherein the arm 30 recoils to a shape-memory curve. FIG. 21F provides a cross-sectional view of the arm 30 of FIG. 21E illustrating shape-memory material 280 distributed within the wall of the arm 30.

[0098] FIGS. 21G-21H illustrate an alternative mechanism for steering the tool arms 30. Referring to FIG. 21G, the shaft 20 of the main body 10 is illustrated having a pair of tool arms 30 extending therefrom. Surrounding the arms 30 lies a deployment frame 290. The frame 290 is comprised of a semi-rigid or rigid material, such as stainless steel wire, which provides sufficient strength to apply force to the arms 30. The frame 290 comprises at least two supports 292, each extending from the distal tip 16 of the shaft 20 and connecting at a peak 294. Each support 292 attaches to a tool arm 30 at an attachment point 296. The frame 290 also includes an actuation support 298 extending from the distal tip 16 to the peak 294. The arms 30 and supports 292, 298 advance from the distal tip 16 of the main body 10 to a desired location in the body in a straight configuration as illustrated in FIG. 21G. Referring to FIG. 21H, application of tension to the actuation support 298 draws the peak 294 toward the distal tip 16 causing the supports 292 to bow or bend outward drawing the attached arms 30 outward. Likewise, the supports 292 may include hinges wherein the supports 292 would bend at the hinge. Although FIG. 21H illustrates the arms 30 bending at the attachment points 296, it may be appreciated that the arms 30 may bend at any location. Such bending directs the tool deployment lumens 38 toward each other to facilitate coordination of tools passed therethrough. Movement of the peak 294 proximally and distally varies the curvature of the arms 30 and provides steering. The frame 290 also serves to create a working space, restricting surrounding tissue from encroaching on the arms 30 and tools 40.

[0099] In most embodiments, the distal ends of the tool arms are lockable to maintain a deflected position. Such locking may be achieved by any suitable mechanisms. When the tool arm is steerable by manipulation of pullwires or pushwires, the wires may be held in place to lock the distal end in a desired position. In embodiments comprising a multiplicity of nestable elements through which pullwires pass, the pullwires are typically used to hold the elements in nesting alignment and to provide steering and locking. By applying tension to the pullwires simultaneously, the elements may be compressed to a state in which they are locked by friction wherein the tension is held. Other locking mechanism may also be used. Further, the tool arms may be locked rotationally and axially within the main body to maintain positioning of the tool arm in relation to the main body.

[0100] B. Shaft

[0101] As described previously, the shaft **36** of the tool arm **30** passes though the main body **10**. In embodiments wherein the main body **10** is deflectable, the shaft **36** is also deflectable. However, although it is desired that the shaft **36** be laterally deflectable, it is also desired that the shaft **36** maintain axial rigidity. Any suitable construction may be used, including a braid reinforced torqueable tube. Additional embodiments are described below.

[0102] **FIGS. 22A-22B** illustrate embodiments of the shaft **36** comprising a coil **140**. Here, illustrated in **FIG. 22A**, the turns of the coil **140** lie adjacent to each other to prevent axial movement and maintain axial rigidity. However, the coil configuration allows deflection of the shaft **36** as shown in **FIG. 22B**.

[0103] In another embodiment, illustrated in **FIG. 23**, the shaft **36** comprises a plurality of adjacent linkages **150**. Here, each linkage **150** includes a pair of protruding structures **152** on its face and a pair of notches **154** on its base. The protruding structures **152** and notches **154** are both arc shaped so that the protruding structures **152** of one linkage **150** rotateably interfit with the notches **154** of an adjacently stacked linkage **150**. By alternating the position of the pairs of protruding structures **152** and notches **154** as shown in **FIG. 23**, the shaft **36** is flexible in both lateral bending directions while maintaining stiffness axially and in torsion. Also shown are flared lumens **158** which pass through the protruding structures **152** and the wall of the shaft **36**. Flaring allows for a rod or wire passed therethrough to move within the lumen **158** as a linkage **150** rotates over the protruding structure **152**. Round pullwire lumens **156** pass through the notches **154** and the wall of the shaft **36** as shown. The rod or wire holds the linkages **150** in a stacked configuration and optionally may be used to steer the shaft **36**.

[0104] In another embodiment, illustrated in **FIG. 24**, the shaft **36** comprises a plurality of adjacent linkages **160** which are also stacked to provide lateral deflection while maintaining axial rigidity. Here, each linkage **160** includes a pair of protruding structures **162** on its face and a pair of notches **164** on its base. The protruding structures **162** and notches **164** are both arc shaped so that the protruding structures **162** of one linkage **160** rotateably interfit with the notches **164** of an adjacently stacked linkage **160**. By alternating the position of the pairs of protruding structures **162** and notches **164** as shown in **FIG. 24**, the shaft **36** is flexible in both lateral bending directions while maintaining stiffness axially and in torsion. In this embodiment, the linkages **150** include a central lumen **166** through which a rod or wire is passed. The rod or wire is used to hold the linkages **60** in the stacked configuration.

[0105] C. Proximal End

[0106] The proximal end **32** of the tool arm **30** may simply terminate in an endpiece or connector for passage of a tool **40** through its tool deployment lumen **38**. However, the proximal end **32** may optionally include a steering cuff **35** for steering the tool arm **30**, particularly for steering its distal end **34**.

[0107] **FIG. 25A** illustrates an embodiment of the proximal end **12** of the main body **10** wherein two tool arms **30** are present, each inserted through an arm guide lumen **26** in the shaft **20** of the main body **10**. As shown, each tool arm **30** includes a steering cuff **35** which remains outside of the main body **10** and the tool deployment lumen **38** is accessible through the steering cuff **35**. **FIG. 25B** illustrates an alternative embodiment of the proximal end **12** wherein two tool arms **30** are present, each inserted through an arm guide lumen **26** through the handle **22** of the main body **10**. Again, each tool arm **30** includes a steering cuff **35** which remains outside of the main body **10** and the tool deployment lumen **38** is accessible through the steering cuff **35**. This embodiment also includes a locking mechanism **170** on each arm **30**. The locking mechanism **170** can be manipulated, such as by turning a lever **172** shown in **FIG. 25B**, to lock the distal end **34** or the tool arm **30** in a steered or deflected position.

[0108] **FIG. 26** illustrates an embodiment of a steering cuff **35** disposed at the proximal end **32** of a tool arm **30** wherein a tool **40** is passed therethrough. In this embodiment, the tool arm **30** includes four pullwires **96** (three are visible in **FIG. 26**) which are equidistantly positioned around the perimeter of the shaft **36**. The pullwires **96** are used to steer the distal end **34** of the arm **30** as previously described. As shown, the tool **40** has a distal end **42** with an end effector **48** which emerges from the distal end **34** of the arm **30**. Likewise, the tool **40** has a proximal end **44** which emerges from the steering cuff **35**. In this embodiment, the steering cuff **35** has a funnel shape wherein one end is attached to at least the pullwires **96** and typically additionally to the arm **30** itself. Deflection of the proximal end **44** of the tool **40**, indicated by angular arrow **180**, presses the proximal end **44** against the steering cuff **35** which rotates the steering cuff **35** to a deflected position, indicated by dashed line. Such rotation applies tension to pullwires **96** diametrically opposite to the deflected position as indicated by arrows **182**. Such tension steers the distal end **34** of the arm **30**. Thus, manipulation of the tool **40** within the steering cuff **35** can be used to steer the distal end **34** of the arm **30**.

[0109] **FIGS. 27A-27B** and **FIGS. 28A-28B** illustrate another embodiment of a steering cuff **35**. Here, the steering cuff **35** has a sphere shape and is disposed at the proximal end **32** of the tool arm **30**. The tool **40** is passed through a lumen **184** in the sphere shaped cuff **35** so that the distal end **42** of the tool emerges from the distal end **34** of the arm **30** and the proximal end **44** remains outside of the cuff **35** as shown. In this embodiment, the tool arm **30** includes four pullwires **96** (three are visible) which are equidistantly positioned around the perimeter of the shaft **36**. The pullwires **96** are used to steer the distal end **34** of the arm **30** as previously described. **FIG. 27A** illustrates the pullwires **96** emerging from the shaft **36** of the arm **30** and attached to the surface of the sphere shaped cuff **35**. Likewise, **FIG. 27B** provides a similar view, however in this case the arm **30** is cutaway to reveal the pullwires **96** extending through lumens in the shaft **36** and the tool **40** extending through the tool deployment lumen **38**. **FIG. 28A** illustrates the embodiment in the straight position. Deflection of the proximal end **44** of the tool **40**, indicated by angular arrow **180**, presses the proximal end **44** against the steering cuff **35** which rotates the steering cuff **35** to a deflected position, as shown in **FIG. 28B**. Such rotation applies tension to pullwires **96** diametrically opposite to the deflected position as indicated by arrow **182**. Such tension steers the distal end **34** of the arm **30**. Thus, manipulation of the tool **40** within the steering cuff **35** can be used to steer the distal end **34** of the arm **30**.

[0110] It may be appreciated that the embodiments of the steering cuff **35** depicted in **FIG. 26** and **FIGS. 27A-27B**, **28A-28B** may include any number of pullwires **96** for any desired level of steerability. For example, in each embodiment, two pullwires **96** may be present disposed on opposite sides of the steering cuff **35** for movement of the steerable distal end **34** of an arm **30** in a single plane. This would be the case for laterally stabilized arms **30**.

[0111] IV. Tool

[0112] As mentioned previously, the system **2** also includes at least one tool **40**. In some embodiments, the tool **40** may simply comprises an end effector **48** positioned at the distal end of the tool arm **30** wherein the end effector **48** is operated by manipulation of mechanisms which extend through the arm **30**. In other embodiments, each tool **40** includes a distal end **42**, a proximal end **44** and an elongate shaft **46** therebetween to allow passage through the tool deployment lumen **38** of the arm **30**. The shaft **46** is typically desired to be a torque-stable tube comprised of any suitable material, such as a braid or coil-reinforced extrusion. In these embodiments, each tool **40** has an end effector **48** disposed at the distal end **42** and optionally a handle **50** at the proximal end **44** for manipulation of the end effector **48** from outside the body. Thus, the tool **40** is advanced so that the end effector **48** emerges from the distal end **34** of the arm **30**.

[0113] A wide variety of end effectors **48** may be used depending on the procedure or tissue manipulations which are desired. For example, end effectors **48** may include but are not limited to knives, needles, sutures, staplers, fasteners, clippers, electrosurgical or hemostatic cutters and coagulators, laser welders, cryosurgery instruments, secondary scopes, forceps, lasers hooks, tongs, graspers, retractors, probes, clamps, scissors, tissue approximation devices and suction applicators.

[0114] **FIG. 29** illustrates an embodiment of a tool **40** having an end effector **48** in the form of scissors **200**. Scissors are one of the oldest surgical instruments used by surgeons.

[0115] Scissors are used to perform many tasks in open surgical procedure but its use in minimal access surgery requires greater skill. As shown, the scissors **200** includes two blades **202**, a fulcrum **204** and force applicators **206**. The cutting force of the scissors **200** works on the law of lever. The force applied on the blade **202** can be calculated by length of the force applicators **206** and force applied on the applicators **206**. The scissors **200** of the tool **40** do not apply the exact law of lever because of the cylinder action of the long shaft **46**, but the design of applicators **206** helps in the amplification of force by lever action. When the blades **202** of the scissors **200** close, its sharp edges grind against each other and any tissue which comes between the blades of scissors will be cut.

[0116] The scissors **200** of **FIG. 29** provide an example of straight scissors wherein the blades are straight. This is a widely used instrument for mechanical dissection in laparoscopic surgery. Other types of scissors include curved scissors **214**, illustrated in **FIG. 29A**, wherein the blade **202** of the scissors **214** is slightly curved. In some cases curved scissors **214** are preferred because the curvature of the blade **202** of this scissors creates additional angles of manipulation and may provide a better view through the scope. Other types of scissors include serrated scissors **216** wherein serrated edges **218** prevent the tissue from slipping out of the blades **202**. This may be useful in cutting a slippery tissue or ligature. Still other types of scissors include hook scissors **220** which encircle a tissue structure before cutting. Since the tissue is held between its hooked blades, there is minimal chance of slipping. The hook scissor **220** is especially useful for cutting secured ducts or arteries. Likewise, the cutting of nerve bundles in neurectomy becomes may benefit from the use of hook scissors **220**. Hook scissors **220** are also helpful in partial cutting of cystic ducts for intra-operative cholangiography. Further, additional types of scissors include microtip scissors **222**. One of the main advantages of microtip scissors **222** is to cut ducts partially for facilitating cannulation. Likewise, this scissor **222** may be used for cutting the cystic duct for performing intra-operative cholangiogram. Exploration of small ducts like common bile duct is very helpful with microtip scissors **222** due to its fine small blades. Fine microtip scissors **222** are also available in curved form.

[0117] **FIG. 30** illustrates an embodiment of a tool **40** having an end effector **48** in the form of gator toothed graspers **230**. These graspers **230** have reverse angled teeth **232** which are capable of providing an aggressive grip on tissue. In addition, the graspers **230** are cupped to allow tissue to herniated when the tissue is compressed. Thus, the graspers **230** may be useful for pelviscopy and handling fibrous ovaries and uterine tissue.

[0118] **FIG. 31** illustrates an embodiment of a tool **40** having an end effector **48** in the form of an articulatable grasper **236**. The grasper **236** includes an articulation section **238** between grasper jaws **240** and the shaft **46**. This allows the grasper **236** to articulate in an additional degree of freedom relative to tool arm **30**.

[0119] Embodiments of the tool **40** having an end effector **48** may be in the form of various shaped retractors. Examples of such retractors include an angled retractor **242**, **(FIG. 32)**, hooked retractors **244 (FIG. 33-34)**, a triangular retractor **246 (FIG. 35)**, and a circular retractor **(FIG. 36)**, to name a few. Each retractor is flexible and allows for manipulation of organs and tissue structures.

[0120] V. Auxiliary Lumens

[0121] As mentioned previously, lumens in addition to the scope lumen **24** and arm guide lumens **26** may be present within the main body **10** and may be considered auxiliary lumens **58**. Such lumens **58** may be used for any purpose, such as irrigation, suction, insufflation, macerating, illuminating, grasping, or cutting to name a few, and are typically used in conjunction with the arms **30** and/or tools **40** inserted through the arms **30** or positioned at the ends of the arms **30**.

[0122] In one embodiment, illustrated in **FIG. 37A**, grasping hooks **310** are inserted through a single auxiliary lumen or through separate auxiliary lumens **58** (shown) in the shaft **20**. The grasping hooks **310** may be comprised of any suitable material, such as shape-memory wire or shapeable polymer, that allows a hook shape to be formed once the hooks **310** have emerged from the distal tip **16**. In addition, the hooks **310** may have a pointed or sharp tip to assist in grasping or piercing tissue. Referring to **FIG. 37B**, the grasping hooks **310** may be used to grasp a portion of tissue

T to create a plication or fold. The tool arms **30** may then be extended on opposite sides of the folded tissue T to deploy a fixation device **312** which will hold the plication in place. **FIG. 37C** illustrates such a fixation device **312** comprising a tie **314** passing through the tissue T with anchors **316** positioned on either side of the plication. The tie **314** may be comprised of a suture, wire or rod, for example, and the anchors **316** may be comprised of knots, disks or expandable umbrellas, to name a few. Such plication procedures may be used for treating gastroesophageal reflux disease (GERD).

[**0123**] Alternatively, other tools may be passed through auxiliary lumens **58** for similar or other purposes. For example, a corkscrew device **320** (**FIG. 38**) or a grasper claw **322** (**FIG. 39**) may be passed through an auxiliary lumen **58** for grasping tissue T. Or, tissue T may be grasped with a suction device. **FIG. 40A** illustrates a suction device **324** in an undeployed configuration. The suction device **324** comprises a deployment sleeve **328** which houses an expandable funnel **326**. Withdrawal of the deployment sleeve **328** releases the funnel **326** allowing the funnel **326** to self-expand, as shown in **FIG. 40B**. The increased surface area of the funnel **326** allows for adequate suction for grasping tissue T and holding the tissue T within the funnel **326**.

[**0124**] It may be appreciated that tools **40** may alternatively be passed through an arm guide lumen **26** for use in conjunction with a tool arm **30** passed through another arm guide lumen **26**. For example, as illustrated in **FIG. 41**, a macerator **336** may be passed through an arm guide lumen **26** for maceration of tissue T or a blood clot while a tool arm **30** is used for irrigation and aspiration. The macerator **336** macerates the tissue T to form small particles which may be more readily aspirated. Further, irrigation through the arm **30** may be used to cleanse portions of the device. For example, as illustrated in **FIG. 42**, the arm **30** may be steered to face the scope **28** allowing irrigation to cleanse the scope **28** thus improving viewing.

[**0125**] Although the foregoing invention has been described in some detail by way of illustration and example, for purposes of clarity of understanding, it will be obvious that various alternatives, modifications and equivalents may be used and the above description should not be taken as limiting in scope of the invention which is defined by the appended claims.

What is claimed is:

1. An endoscopic apparatus for performing a procedure within a patient body, comprising:

a first tool arm and a second tool arm each adapted to be operable relative to an endoscope;

an elongate body through which each tool arm is positionable,

wherein each of the tool arms are independently manipulatable and adapted to control a relative distance between the tool arms such that the tool arms are orthogonally positionable with respect to the elongate body.

2. The apparatus of claim 1, wherein each tool arm comprises a flexible shaft extendable through the elongate body.

3. The apparatus of claim 1, wherein each tool arm is manipulatable via its proximal end.

4. The apparatus of claim 1, wherein each tool arm comprises a manipulatable distal portion.

5. The apparatus of claim 1, wherein each tool arm defines a channel for passing a tool therethrough.

6. The apparatus of claim 5, wherein each channel extends from an insertion inlet at a proximal end to an outlet at a distal end of the channel.

7. The apparatus of claim 1, wherein each tool arm is positionable within a corresponding tool lumen defined through the elongate body.

8. The apparatus of claim 7, wherein a proximal portion of each tool lumen is independent of one another.

9. The apparatus of claim 1, wherein the elongate body is articulatable via a plurality of wires routed along a length of the elongate body.

10. An endoscopic system for performing a procedure within a patient body, comprising:

an endoscope;

a first tool arm and a second tool arm each adapted to be operable with the endoscope;

an elongate body through which the endoscope and each tool arm are positionable, and

wherein each of the tool arms are adapted to independently control a relative distance between the tool arms and the endoscope such that the tool arms are orthogonally positionable with respect to a longitudinal axis defined by the endoscope.

11. The system of claim 10, wherein the endoscope includes an imaging system at a distal end of the endoscope.

12. The system of claim 10, wherein each tool arm comprises a flexible shaft extendable through the elongate body.

13. The system of claim 10, wherein each tool arm is manipulatable via its proximal end.

14. The system of claim 10, wherein each tool arm comprises a manipulatable distal portion.

15. The system of claim 10, wherein each tool arm defines a channel for passing a tool therethrough.

16. The system of claim 15, wherein each channel extends from an insertion inlet at a proximal end to an outlet at a distal end of the channel.

17. The system of claim 10, wherein the endoscope is positionable within a main lumen defined through the elongate body.

18. The system of claim 17, wherein each tool arm is positionable within a corresponding tool lumen defined through the elongate body and adjacent to the main lumen.

19. The system of claim 18, wherein the main lumen defines a diameter which is greater than a diameter of the tool lumens.

20. The system of claim 18, wherein a proximal portion of each tool lumen is independent of one another.

21. The system of claim 10, wherein the elongate body is articulatable via a plurality of wires routed along a length of the elongate body.

22. The system of claim 10, further comprising a visualization element mounted in a distal portion of the endoscope.

* * * * *