Jan. 14, 1958 R. A. DULL 2,819,939

LAPSED TIME PRINTER

Filed Aug. 23, 1954 2 Sheets-Sheet 1

Fig. 1.

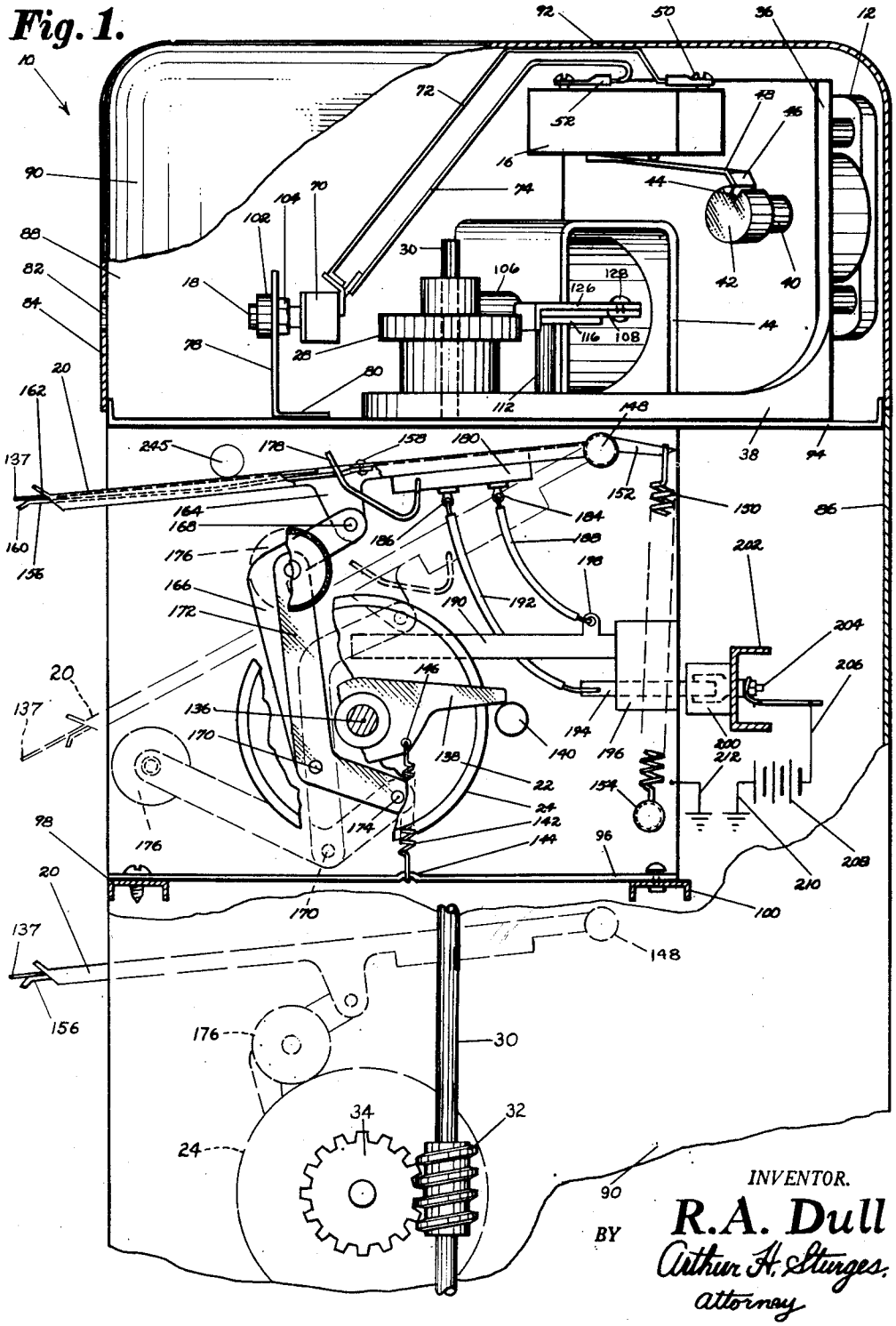

INVENTOR.
R. A. Dull
BY
Arthur H. Sturges
Attorney

Jan. 14, 1958 R. A. DULL 2,819,939

LAPSED TIME PRINTER

Filed Aug. 23, 1954 2 Sheets-Sheet 2

Fig. 2.

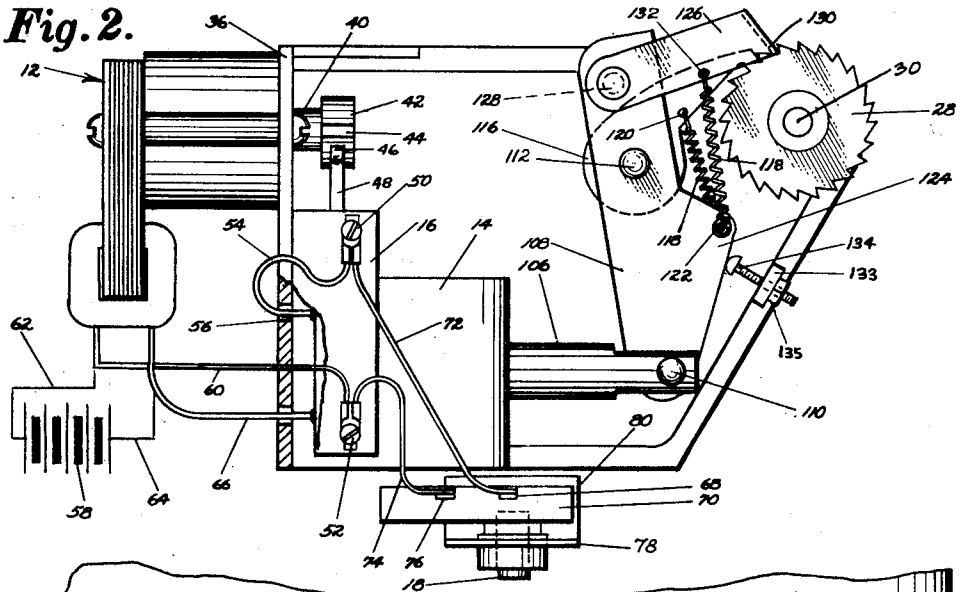

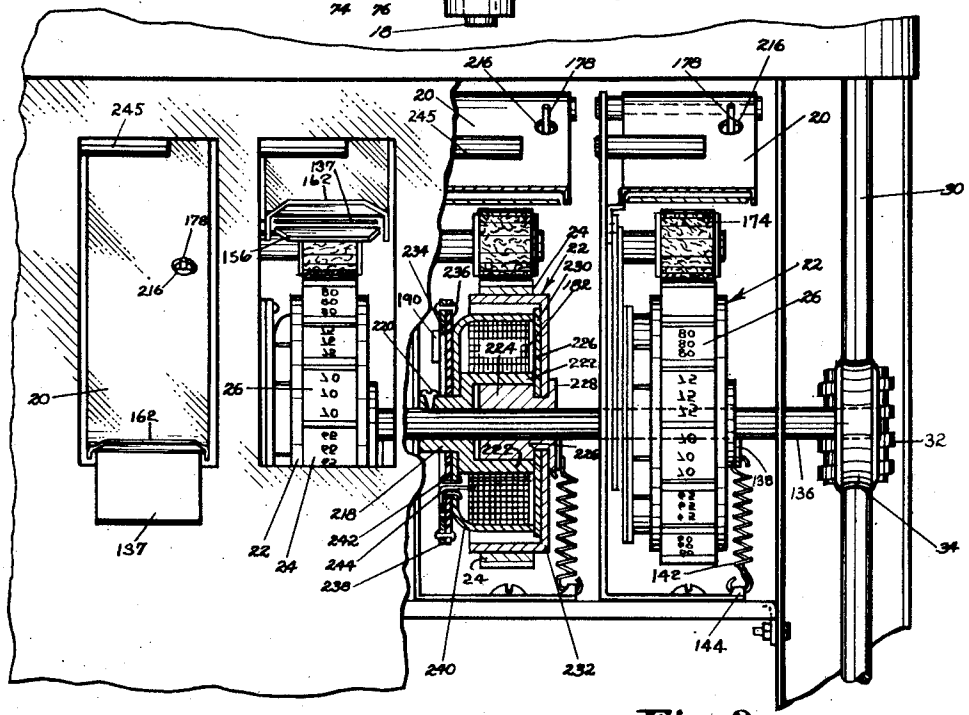

Fig. 3.

INVENTOR.

BY R.A. Dull

Arthur H. Stuges

Attorney

United States Patent Office 2,819,939 Patented Jan. 14, 1958

2,819,939

LAPSED TIME PRINTER

Raymond A. Dull, Omaha, Nebr., assignor of one-half to Lucien Pettengill, Jr., Omaha, Nebr.

Application August 23, 1954, Serial No. 451,459
6 Claims. (Cl. 346—87)

This invention relates to time recording and charge computing machines for use in parking garages and lots where charges for parking motor vehicles are made by the hour and parts thereof, and in particular a meter having a plurality of card holders, in which the meter computes and stamps the charge on a card in a card holder, and in which the elements of the meter are adapted to be adjusted to compensate for changes in rates for parking by the hour and fractions thereof.

The purpose of this invention is to eliminate the chance of error in computing charges for parking vehicles and also the possibility of dishonest attendants appropriating portions of charges for parking vehicles in garages and on lots and the like.

The present method is, upon entering a garage, cards are stamped with the time. Upon leaving, cards are again stamped and the difference is figured to give the total time which is multiplied by the rate per hour, as are also any fractions thereof, whereby the two are added together to obtain the amount of charge.

The education of attendants, particularly of parking lots, is not usually of the highest order, and even with highly educated attendants, it is difficult to estimate a charge where the rate is by the hour with so much additional for each quarter of an hour, and particularly at peak periods, such as in rush hours, where lines of people are waiting for their cars, numerous mistakes are made and some of these are costly to lot and garage owners. Furthermore, at the change of a shift, a new attendant may use a different method of computing the charge, resulting in further chance for error and confusion.

With this thought in mind this invention contemplates a machine having a plurality of card holders with time indicating indicia on peripheral surfaces of drums positioned on magnetic clutches whereby lapsed time and computed charges therefor may be printed on the cards by pressing downwardly on the holders and wherein the elements are actuated by a synchronous motor timer in combination with solenoids actuated thereby.

The object of this invention is, therefore, to provide a meter for parking lots, garages or equipment-renting services, as well as job time recording for separate operations within manufacturing plants or employee time cards.

Another object of the invention is to provide a meter for vehicle parking garages and lots in which one meter is adapted for use in garages regardless of size or the number of vehicles adapted to be parked therein, the meter being adapted to have additional card holder units added thereto, and all of the card holder units being adapted to be actuated by a single synchronous motor timer.

Another important object of the invention is to provide a lapsed time printer and charge computing parking meter for use in garages, parking lots, and the like, in which means is provided for adjusting the computing elements to compensate for changes in rates.

A further object of the invention is to provide a lapsed time printer and charge computing meter for use in parking lots, garages and the like in which the device is adapted to be actuated by unskilled attendants.

A still further object is to provide an improved machine for indicating time and calculating charges for parking vehicles in garages, parking lots, and the like, in which the machine is of a simple and economical construction.

With these and other objects and advantages in view

the lapsed time printer of this invention includes a single synchronous motor timer that delivers a repetitious fixed time impulse which is conveyed mechanically to time accumulating devices in which the number of cycles, the length of time sequence, and the number of cards that can be handled are unlimited.

The timing operations of the meter of this invention allows the adjustment of time cycles, rates, or other characteristics of each unit independently, or any multiple of this impulse can be accumulated for the desired time interval, and, therefore, the accumulated interval can be recorded on one, several, or on all units, or cards of the units, simultaneously, and furthermore, any accumulated record can be removed without effecting the sequence of the other units.

Other features and advantages of the invention will appear from the following description taken in connection with the drawings, wherein:

Figure 1 is a side elevational view of the improved parking meter with a portion of the wall on the near side of the housing broken away showing the synchronous motor, solenoid, and manually actuated adjusting switch in the upper part, and a card holder and printing wheel or drum in the intermediate part.

Figure 2 is a plan view looking downwardly upon the upper end of the meter showing the motor, solenoid, and ratchet assembly.

Figure 3 is a front elevational view showing an intermediate part of the meter with upper and lower ends and part of the front wall broken away showing the card holders and magnetic clutches.

While one embodiment of the invention is illustrated in the above referred to drawings, it is to be understood that they are merely for the purpose of illustration, and that various changes in construction may be resorted to in the course of manufacture in order that the invention may be utilized to the best advantage according to circumstances which may arise, without in any way departing from the spirit and intention of the device, which is to be limited only in accordance with the appended claims. And while there is stated the primary field of utility of the invention, it remains obvious that it may be employed in any other capacity wherein it may be found applicable.

In the accompanying drawings, and in the following specification, the same reference characters are used to designate the same parts and elements throughout, and in which the numeral **10** refers to the invention in its entirety, numeral **12** indicating a synchronous motor, numeral **14** a solenoid, numeral **16** a micro-switch actuated by the motor and adapted to energize the solenoid, numeral **18** a button of a manually actuated switch for advancing time indicating elements in case of current interruptions, numeral **20** card holders pivotally mounted in the housing, numeral **22** drums having bands **24** with numerals **26** thereon on the peripheral surfaces thereof, and numeral **28** a ratchet wheel actuated by the solenoid and adapted to operate the drums through a vertically disposed shaft **30**, worms **32**, worm gears **34**, and magnetic clutches.

The motor **12** is mounted on a vertical panel **36** of an L-shaped bracket having a base **38** and, as shown in Figure 1, the shaft **40** of the motor extends through the panel **36** and the extended end of the shaft is provided with a cylindrical cam-knob **42** having a slot **44** therein. The slot is positioned to receive a flange **46** of a spring arm **48** extended from the micro-switch **16** whereby each time the flange drops into the slot the switch is actuated. The micro-switch **16** is provided with terminals **50** and **52**, the terminal **50** being connected by a wire **54** to one terminal of the solenoid **14** through an opening **56** in the panel **36**, and the terminal **52** being connected to one side

of a battery or other source of electric current as indicated by the numeral 58 with wires 60 and 62, and the opposite side of the battery, or source of current, being connected to the solenoid by wires 64 and 66. The wires 62 and 64 also connect the terminals of the motor 12 to the source of electric current.

The terminal 50 of the micro-switch is also connected to a terminal 68 of a switch 70 which is actuated by the button 18 with a wire 72 and the terminal 52 is connected by a wire 74 to the opposite terminal 76 of the switch 70. The switch 70 is mounted on a vertically disposed leg 78 of a bracket 80 and the switch is positioned to be actuated by a finger or rod inserted through an opening 82 in a front wall 84 of an enclosing housing having a rear wall 86, side walls 88 and 90, a top 92, a horizontally disposed platform 94 on which the base 38 is positioned, and vertically spaced elements 96 carried by horizontally positioned channel bars 98 and 100 which are arranged in tiers. The button 18 is freely slidable in a bushing 102 that is secured in the leg 78 with a nut 104.

The solenoid 14 is provided with a spring actuated core 106, the spring being positioned to urge the core outwardly, as shown in Figure 2, and the extended end of the core is pivotally connected to a lever 108 with a pin 110. The lever 108 is pivotally mounted on a post 112 extended from the base 38 and a pawl 116 also pivotally mounted on the post 112 is positioned to engage the teeth of the ratchet wheel 28 to prevent rotation of the ratchet wheel in a counter-clockwise direction from the position shown in Figure 2. The tooth at the end of the pawl is retained in engagement with the teeth of the ratchet wheel by a spring 118, one end of which is held in an opening 120 in the pawl and the other being passed through a hole 122 formed through an extension 124 at one side of the lever 108. The lever 108 is also provided with a dog 126 which is pivotally mounted on the extended end thereof with a pin 128 and the dog is provided with a tooth 130 that is also retained in engagement with the teeth of the ratchet wheel 28 by the said spring 118 which, being passed through the hole 122 is extended to an opening 132 in the dog 126. Each time the solenoid 14 is energized the lever 108 is moved in a clockwise direction whereby the ratchet wheel 28 is also advanced in a clockwise direction by the dog 126.

As shown by Figure 2 an upright post 133, threadedly carrying a screw bolt 134 is integrally formed with the base 38 with the screw bolt extended toward the lever 108 and held by a nut 135, thereby providing an adjustable limit stop for movements of the said lever and solenoid core 106.

It will be noted in Figure 3 of the drawings that the shaft 30 extends vertically downward from the ratchet wheel 28, and has secured thereon the worm 32, and it will be noted that the worm 32 coacts with a worm gear 34 to rotate a shaft 136.

It will be understood that a plurality of worms 32, worm gears 34 and shafts 136, and their adjunct parts, are employed, and all are similar in construction, and therefore, but one will be described herein.

Referring to Figure 1 of the drawings, the card holder 20, which is channel-shaped in cross section, and which is positioned with flanges at the edges extended downwardly is pivotally mounted on a shaft 148, and the card holder 20 is urged upwardly to the position shown in full lines in Figure 1, by a spring 150, the upper end of which is connected to an arm 152 which extends from the holder 20, and the lower end of the spring 150 is secured to a stud 154 which is mounted on the side wall of an element housing 96. The ticket 137 is retained in the holder 20 by a spring 156, the inner end of which is secured to the holder by means of rivets 158, or the like. The outer end of the spring 156 is provided with a lip 160 to facilitate the insertion of the ticket into the holder 20.

The extended end of the card holder 20 is also provided with a guide 162, which extends upwardly, as best shown in Figure 1 of the drawings.

It will be noted in Figure 1 of the drawings, that an arm 164 extends downwardly from one of the flanges of the card holder 20, and is pivotally connected to an offset lever 166 by a pin 168. The lower end of the lever 166 is pivotally connected to an L-shaped bar 172 by a further pin 170. The lower end of the L-shaped bar 172 is pivotally connected to the element housing 96 by a further pin 174. The upper end of the L-shaped bar 172 is pivotally connected to an inking roller 176, the peripheral edge of which is covered with felt or other ink-carrying material which normally bears against the characters on the surface of the band 24 during times when the drum 22 is rotated, thereby inking the characters on the band 24. Upon depressing the card holder 20 from the full line position, shown in Figure 1, to the broken line position, shown in Figure 1, the levers 166 and 172 cause the inking roller 176 to move to the broken line position away from the band 24, as shown in Figure 1, of the drawings.

The drum 22 is provided with an arm 138 which is positioned to engage a stop 140 at desired times. The arm 138 is secured to a flange 228 of a magnetic clutch to be later described. The arm 138 is normally urged and held against the stop 140 by a spring 142. One end of the spring 142 is held in an opening 146 in an arm 138 and the other end of the spring 142 is secured in an offset section 144 of the element housing 96. It will be understood that upon rotation of the drum in a counter-clockwise direction, the spring 142 becomes extended, and thereby put in tension. Upon removal of the ticket 137, and subsequent operations, as will be later described, the arm 138 and the spring 142 return the drum to its original position indicated in Figure 1 of the drawings.

A magnetic clutch 250 is employed, and the clutch, which is now to be described, includes a hub 218 secured to the shaft 136 by means of a set screw or the like 220. The hub 218 is provided with a cylinder 222 and, as shown in Figure 3 of the drawings, the cylinder 222 is constructed so as to receive therein a sleeve 224.

The sleeve 224 is provided with an annular groove 226 wherein the drum 22 and a plate 230 are retained, and it will be understood that the plate 230 is preferably made of cast iron or the like, so as to be attracted by a magnetic field. A flange 228 is provided on the sleeve 224 and forms the outer wall of the annular groove 226, and it will be understood that the arm 138 is attached thereto.

Referring to Figure 3 of the drawings, it will be further noted that the hub 218 includes a cup-shaped casing 240, and the casing 240 is rigidly secured thereto. Mounted between the inner walls of the cup-shaped casing 240 and the outer walls of the cylinder 222 of the hub 218, is a magnetic coil 182, and it will be understood that the magnetic coil 182 is rigidly held therebetween.

Secured to the hub 218 and to the cup-shaped casing 240 is a disc of insulating material 238, and secured to the disc of insulating material 238 by rivets or the like 236, is a contact ring 234. The contact ring 234 is preferably made of copper or some other equally conductive material.

It will be further noted in Figure 3 of the drawings, that a hollow rivet 242 extends through the wall of the casing 240 and disc 238, and that a contact wire 244 extends through the rivet and connects to the coil 182, the other end of the wire 244 being secured to the contact ring 234. The other terminal of the coil is grounded through the cylinder 222, the hub 218, and the shaft 136.

At times when electrical energy is imparted through a brush 190, to be later described, to the contact ring 234, to the magnetic coils 182, an electromagnetic field is established, and the said field exerts a magnetic force which attracts the plate 230 and secures the plate 230

tightly against the cylinder 222 and the casing 240, thereby causing the drum 22 and its adjunct parts to rotate in exact relation with the shaft 136, until the electrical energy going to the magnetic coils 182 is terminated.

Referring to Figure 1 of the drawings, it will be noted that at times when a card, ticket or the like 137 is inserted into the card holder 20, the leading edge of the ticket 137 strikes and causes to operate an arm 178 of a micro-switch 180. The micro-switch 180 is provided with terminals 184 and 186, and it will be noted in Figure 1 of the drawings, that a wire 188 extends from the terminal 184 to a lug 198 of a brush 190.

It will be noted that a further wire 192 extends from the terminal 186 to a bar 194 mounted in a block of insulating material 196. The bar 194 extends through the block 196 and into a receptacle 200 mounted on a channel bar 202, which is carried between the side walls of the housing. It will be understood that one of the receptacles 200 is provided for each of the card holder and printing units herein described, and that the bar 194 makes contact with a terminal 204 and said terminal 204 is connected by wire 206 to a source of electrical current such as a battery 208. The opposite terminal of the battery 208 is connected to ground by means of a wire 210. The element housing 96 is also connected to ground such as by the wire 212.

It will be further noted in Figures 1 and 3 of the drawings that the arm 178 extends upwardly through an opening 216 in the card holder 20 and assures contact therewith by the ticket 137.

The immediately foregoing description is the means by which electrical energy is imparted to the magnetic clutch heretofore described.

The computing elements are adapted to be adjusted to compensate for rate changes as the band 24, which carries the characters to be imprinted on the card 137, and which is mounted on the perimeter of the cup-shaped drum 22, is adapted to be removed and replaced by another band having a different set of characters thereon.

Operation

In conjunction with automobile parking or the like, a card or ticket is used which is so constructed that it may be readily separated into three portions, each portion having a like identifying numeral imprinted thereon. The card or ticket is severed, one portion thereof comprising the claim check to be held by the owner of the automobile; another portion to be attached to the windshield, or the like, of an automobile for the purposes of identification; and the third portion numbered 137 in the drawings is inserted into the instant device. It will be understood that the portion 137 will have but one impression printed thereon by the instant device, and that printing is made at the time the owner of the automobile comes to reclaim his car. The operator inserts the ticket portion 137 into the card holder 20 until the end of the ticket 137 strikes the arm 178 of the micro-switch 180, thereby allowing electrical current to flow from the receptacle 200 through the bar 194, wire 192, through the micro-switch 180, through the wire 188 to the lug 198 of the brush 190, thereby causing the brush 190 to become energized. It will be understood that the ticket 137 remains tightly abutted against the arm 178 at all times, due to the action of the spring 156 which has sufficient resiliency to maintain the ticket 137 in a stable position until the operator stamps and removes the ticket 137 by force.

At the time the arm 178 is caused to operate and electrical energy imparted to the brush 190, the current passes through the brush 190 to and through the contact ring 234, through the contact wire 244 to the magnetic coil 182, thereby energizing the magnetic coil 182 and attracting and holding the plate 230 and the drum 22 tightly against the cup-shaped casing 240 and the cylinder 222, and since the cylinder 222 and the hub 218 are formed of one piece of material, and since the hub 218 is secured

to the shaft 136 by means of the set screw 220, the parts heretofore described will be caused to rotate in direct relationship with the shaft 136, and since the contact ring 234 is secured at all points to the casing 240, constant contact is maintained between the contact ring 234 and the brush 190, thereby allowing for electrical energy to be imparted to the coils 182 during operation.

Since the shaft 136 has attached on one end thereof, the worm gear 34, and since the worm gear 34 revolves in relationship to the worm 32 which is secured to the shaft 30, and since the shaft 30 is secured to the ratchet wheel 28, the foregoing parts will be caused to operate or rotate in direct relationship with one another.

It will be understood that the synchronous motor 12, employed, is of the type which makes one complete revolution per minute, and since the cam 42 mounted on the shaft 40 of said motor is provided with a slot 44, in which a spring arm 48 from a micro-switch 16 is caused to seat said slot 44 once every minute, it will be understood that the micro-switch 16 will be actuated once every minute, and in this manner a solenoid 14, having a core 106 mounted therein, will actuate the core 106 by pulling said core inwardly into the solenoid, thereby advancing the ratchet wheel one notch every minute by means of the lever 108 and dog 126. In this manner the shaft 30 is caused to rotate slightly every minute, and this rotation of the shaft 30 is transferred to the shaft 136 and in turn to the magnetic clutch, drum 22, and their adjunct parts, whereby lapsed time is transferred from the synchronous motor 12 to the drum 22 and band 24.

It will be understood that the band 24 is so designed as to indicate a cost for expired time rather than the lapsed time in minutes or hours. In other words, the band 24 has an initial numeral thereon which reads according to the rate of charge for an initial period of parking, such as an hour, and it will be understood that this same figure will be represented on the band 24 until an hour's lapsed time has passed with respect to the rotation of the shaft 136, at which time the numerals on the band 24 will change to include the additional cost for the next period of time, and will change accordingly as time lapses.

At the time the customer calls for his automobile, the operator depresses the card holder 20, this being the only time the card holder is depressed, and upon depressing the card holder, the underside of the ticket 137 strikes the inked band 24 containing the numerals indicating the charge, and imprints said numerals on the underside of the ticket 137, whereupon the operator then allows the card holder 20 to raise and removes the ticket 137 from the card holder, thereby releasing the arm 178, thereby shutting off the electrical current to the magnetic clutch and allowing the action of the spring 142 on the arm 138 to return the drum 22 to its initial position preparatory to the insertion of a new ticket 137.

It will further be understood that in instances where current supply has temporarily been interrupted due to failure of power or the like, the operator may advance the mechanism by hand to compensate for the lost time by inserting a pencil or other object through an opening 82 in the front wall 84 and pushing in on the button 118 for manually operating the solenoid 14 and advancing the shaft 30 and ratchet wheel 28 one minute at a time.

In cases of increased or decreased rates for parking, it will be understood that the operator may change said rates by removing the band 24 from the drum 22 and replacing the old band with one having the new schedule of rates.

The synchronous motor timer referred to in this application may be such as or similar to the motor type B3 described on page 6 of the catalog entitled Synchronous Motors, of the Telechron Department of the General Electric Company, Ashland, Massachusetts.

The micro-switch 16 is such as or similar to the switch Model BZ–ZRL described on page 17 of the Micro Pre-

cision Switch catalog, number 82, of the Micro Switch Division of the Minneapolis-Honeywell Regulator Company, of Freeport, Illinois.

The solenoid 14 is such as or similar to the solenoid, Model #2AC described inside of the cover page of the solenoid catalog folder published by the Guardian Electric Manufacturing Co., of Chicago, Illinois.

And the micro-switch 180 is such as or similar to the "Tyni Switch" as manufactured by the Tyni Switch Company, of Forestville, Connecticut.

With the parts designed and assembled in this manner a card, including three sections or tickets is provided as a vehicle enters a garage, parking lot, or the like. With each section having the same number printed thereon, one section is taken by the car owner, one section placed in the vehicle, and the third section retained in the machine. Upon returning for the vehicle, the section held by the owner of the vehicle is handed to an attendant whereby that card holder in which the section of the same numbered card remaining in the machine is positioned is depressed and the length of time and amount of the charge stamped directly thereon. By this means any chance of mistake is substantially eliminated.

From the foregoing specification, it will become apparent that the invention disclosed will adequately accomplish the functions for which it has been designed and in an economical manner, and that its simplicity, accuracy, and ease of operation are such as to provide a relatively inexpensive device, considering what it will accomplish and that it will find an important place in the art to which it appertains when once placed on the market.

It is thought that persons skilled in the art to which the invention relates will be able to obtain a clear understanding of the invention after considering the description in connection with the drawings. Therefore, a more lengthly description is regarded as unnecessary.

Changes in shape, size, and rearrangement of details and parts, such as come within the purview of the invention claimed, may be resorted to, in actual practice, if desired.

Having now described the invention that which is claimed to be new and desired to be procured by Letters Patent, is:

1. A parking meter comprising a card holder, a drum having characters on the peripheral surface, a shaft for rotatably mounting the drum whereby the drum is positioned with the peripheral surface adapted to be engaged by a card in the card holder, a magnetic clutch positioned in the drum, a pawl and ratchet assembly operatively connected to the shaft for rotating the shaft, a solenoid for actuating the pawl, a synchronous motor for energizing the solenoid, and means for energizing the magnetic clutch by a card positioned in the card holder to actuate the drum by the shaft to correspond with periods of time, said card holder being adapted to be pressed against the surface of the drum whereby characters on the drum are adapted to be printed on a card in the holder.

2. A vehicle parking meter comprising a card holder, a drum having indicia on the peripheral surface, a shaft for rotatably mounting the drum whereby the peripheral surface is positioned to be engaged by the card holder, means for pivotally mounting the card holder whereby upon depressing the holder a card therein is adapted to engage indicia on the drum, means for inking indicia on the drum, a magnetic clutch positioned in the drum, a pawl and ratchet assembly operatively connected to said shaft for rotating the shaft, a solenoid for actuating the pawl, a synchronous motor for actuating elements to energize the solenoid, and means for energizing the magnetic clutch to actuate the drum by the shaft at regular time intervals.

3. A vehicle parking meter comprising a card holder, a drum having indicia on the peripheral surface, a shaft for rotatably mounting the drum, a magnetic clutch positioned in the drum for operatively connecting the drum to the shaft, means for pivotally mounting the card holder whereby upon depressing the holder a card therein is adapted to engage the indicia on the surface of the drum, means for inking the indicia on the drum, a solenoid, a synchronous motor for intermittently energizing the solenoid, and a ratchet and pawl assembly actuated by the solenoid and operatively connected to the means for energizing the magnetic clutch as a ticket is placed in the card holder for causing the drum to rotate with the shaft for advancing the drum in relation to periods of time.

4. A vehicle parking meter comprising a card holder, a drum having indicia on the peripheral surface, a shaft on which the drum is rotatably mounted, means for pivotally mounting the card holder whereby a card therein is adapted to engage the indicia on the surface of the drum, means for inking the indicia on the drum, a magnetic clutch positioned in the drum, a ratchet wheel operatively connected to the shaft for rotating the shaft on which the drum is mounted, pawls positioned to engage the ratchet wheel, a solenoid operatively connected to said pawls, a micro-switch operatively connected to the solenoid, a motor, means for intermittently actuating the micro-switch by the motor, and a micro-switch carried by the card holder and adapted to be actuated by a card placed in the holder for completing a circuit to the magnetic clutch in the drum for connecting the drum to the shaft to advance the drum.

5. In a meter for parking lots, garages, and the like, the combination which comprises a plurality of card holders, drums having indicia on the peripheral surfaces thereof, means for pivotally mounting the card holders whereby upon depressing the holders cards therein are adapted to contact the indicia on the surfaces of the drums, shafts upon which the drums are rotatably mounted, magnetic clutches positioned in the drums for operatively connecting the drums to the shafts, a ratchet and pawl assembly operatively connected to said shafts, a solenoid operatively connected to the ratchet and pawl assembly, a motor, means for intermittently energizing the solenoid by the motor, and means for energizing the magnetic clutches in the drums for advancing the drums as the card holders are depressed.

6. In a motor vehicle parking meter, the combination which comprises a plurality of card holders, drums having indicia on the peripheral surfaces, means for pivotally mounting the card holders whereby upon depressing the holders cards therein are adapted to contact indicia on the surfaces of the drums, means for inking the indicia on the drums as the card holders are depressed, shafts upon which the drums are rotatably mounted, magnetic clutches positioned in the drums for operatively connecting the drums to the shafts, micro-switches carried by the card holders for energizing the magnetic clutches to operatively connect the drums to the shafts as the card holders are depressed, resilient means for returning the card holders to starting positions, a ratchet wheel and pawl assembly operatively connected to the shafts for rotating the shafts upon which the drums are mounted, a solenoid having a core, means operatively connecting the core of the solenoid to the pawls for actuating the ratchet wheel, a micro-switch connected to the solenoid, a motor, mechanical means for intermittently actuating the micro-switch by the motor, a manually actuated switch for actuating the micro-switch, and a suitable housing in which the parts are mounted.

References Cited in the file of this patent

UNITED STATES PATENTS

803,888	Follett	Nov. 7, 1905
1,680,326	Dulton	Aug. 14, 1928
1,864,566	Walter	June 28, 1932
2,454,095	Amend et al.	Nov. 16, 1948
2,491,110	Hunt	Dec. 13, 1949