(12) INTERNATIONAL APPLICATION PUBLISHED UNDER THE PATENT COOPERATION TREATY (PCT)

(19) World Intellectual Property Organization
International Bureau

(43) International Publication Date
26 November 2015 (26.11.2015)

WIPO | PCT

(10) International Publication Number
WO 2015/179720 A1

(51) International Patent Classification:
F01N 3/20 (2006.01) *B01D 53/94* (2006.01)
F01N 9/00 (2006.01)

(21) International Application Number:
PCT/US2015/032093

(22) International Filing Date:
22 May 2015 (22.05.2015)

(25) Filing Language: English

(26) Publication Language: English

(30) Priority Data:
14/286,284 23 May 2014 (23.05.2014) US

(71) Applicant: **TENNECO AUTOMOTIVE OPERATING COMPANY INC.** [US/US]; 500 North Field Drive, Lake Forest, Illinois 60045 (US).

(72) Inventors: **ETTIREDDY, Padmanabha Reddy**; 49182 Ivybridge Way, Canton, Michigan 48187 (US). **KOTRBA, Adam J.**; 8201 Tyrrell Road, Laingsburg, Michigan 48848 (US). **GOLIN, Michael**; 9470 Trinkle Road, Dexter, Michigan 48130 (US).

(74) Agents: **WALKER, Donald G.** et al.; Harness, Dickey & Pierce, P.L.C., P.O. Box 828, Bloomfield Hills, Michigan 48303 (US).

(81) Designated States *(unless otherwise indicated, for every kind of national protection available)*: AE, AG, AL, AM, AO, AT, AU, AZ, BA, BB, BG, BH, BN, BR, BW, BY, BZ, CA, CH, CL, CN, CO, CR, CU, CZ, DE, DK, DM, DO, DZ, EC, EE, EG, ES, FI, GB, GD, GE, GH, GM, GT, HN, HR, HU, ID, IL, IN, IR, IS, JP, KE, KG, KN, KP, KR, KZ, LA, LC, LK, LR, LS, LU, LY, MA, MD, ME, MG, MK, MN, MW, MX, MY, MZ, NA, NG, NI, NO, NZ, OM, PA, PE, PG, PH, PL, PT, QA, RO, RS, RU, RW, SA, SC, SD, SE, SG, SK, SL, SM, ST, SV, SY, TH, TJ, TM, TN, TR, TT, TZ, UA, UG, US, UZ, VC, VN, ZA, ZM, ZW.

(84) Designated States *(unless otherwise indicated, for every kind of regional protection available)*: ARIPO (BW, GH, GM, KE, LR, LS, MW, MZ, NA, RW, SD, SL, ST, SZ, TZ, UG, ZM, ZW), Eurasian (AM, AZ, BY, KG, KZ, RU, TJ, TM), European (AL, AT, BE, BG, CH, CY, CZ, DE, DK, EE, ES, FI, FR, GB, GR, HR, HU, IE, IS, IT, LT, LU, LV, MC, MK, MT, NL, NO, PL, PT, RO, RS, SE, SI, SK, SM, TR), OAPI (BF, BJ, CF, CG, CI, CM, GA, GN, GQ, GW, KM, ML, MR, NE, SN, TD, TG).

Declarations under Rule 4.17:

— *as to applicant's entitlement to apply for and be granted a patent (Rule 4.17(ii))*

— *as to the applicant's entitlement to claim the priority of the earlier application (Rule 4.17(iii))*

Published:

— *with international search report (Art. 21(3))*

(54) Title: EXHAUST AFTERTREATMENT SYSTEM WITH LOW-TEMPERATURE SCR

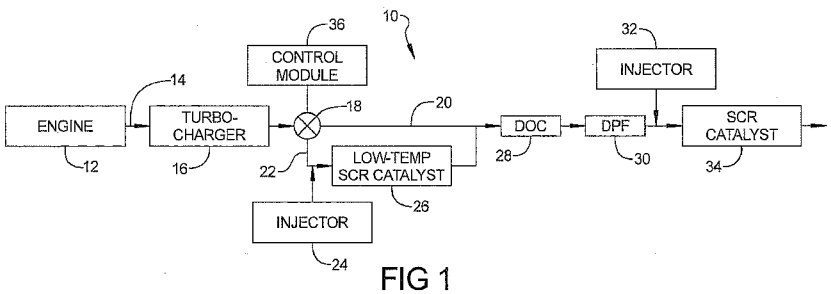

FIG 1

(57) Abstract: An aftertreatment system may treat exhaust gas discharged from an engine. The system may include first and second selective-catalytic-reduction (SCR) catalysts and a valve. The valve may be disposed upstream of the first SCR catalyst and at least one of an oxidation catalyst and a particulate filter. The valve is connected to first and second exhaust flow paths and is movable between a first position allowing exhaust gas to flow through the first flow path and bypass the second flow path and a second position allowing exhaust gas to flow through the second flow path and bypass the first flow path. The second SCR catalyst may be a low-temperature SCR catalyst and may be disposed in the second flow path. A control module may cause the valve to move between the first and second positions based on a temperature of the exhaust gas and/or a temperature of the engine.

WO 2015/179720 A1

EXHAUST AFTERTREATMENT SYSTEM WITH LOW-TEMPERATURE SCR

FIELD

[0001] The present disclosure relates to an exhaust aftertreatment system for a combustion engine.

BACKGROUND

[0002] This section provides background information related to the present disclosure and is not necessarily prior art.

[0003] In an attempt to reduce the quantity of NO_X and particulate matter emitted to the atmosphere during internal combustion engine operation, a number of exhaust aftertreatment devices have been developed. A need for exhaust aftertreatment systems particularly arises when diesel combustion processes are implemented. Typical aftertreatment systems for diesel engine exhaust may include one or more of a diesel particulate filter (DPF), a selective catalytic reduction (SCR) system (including a urea injector), a hydrocarbon (HC) injector, and a diesel oxidation catalyst (DOC).

[0004] Following a cold start of an engine, exhaust gas temperatures are much lower than exhaust gas temperatures produced by the engine at normal operating temperatures. For example, cold-start exhaust gas temperatures can be between approximately 60-250 degrees Celsius. Conventional SCR catalysts often fail to effectively reduce NO_X from such cold-start exhaust gas streams. Therefore, it may be desirable to provide an aftertreatment system with an SCR catalyst that can effectively reduce NO_X from cold-start exhaust gas and another SCR catalyst that can effectively reduce NO_X from exhaust gas at normal operating temperatures.

SUMMARY

[0005] This section provides a general summary of the disclosure, and is not a comprehensive disclosure of its full scope or all of its features.

[0006] In one form, the present disclosure provides an aftertreatment system for treating exhaust gas discharged from a combustion engine. The

aftertreatment system may include first and second selective-catalytic-reduction catalysts, a valve and a control module. The valve may be disposed upstream of the first selective-catalytic-reduction catalyst and at least one of an oxidation catalyst and a particulate filter. The valve may be connected to first and second exhaust flow paths and may be movable between a first position allowing exhaust gas to flow through the first exhaust flow path and bypass the second exhaust flow path and a second position allowing exhaust gas to flow through the second exhaust flow path and bypass the first exhaust flow path. The second selective-catalytic-reduction catalyst may be a low-temperature selective-catalytic-reduction catalyst and may be disposed in the second exhaust flow path. The control module is in communication with the valve and may be configured to cause the valve to move between the first and second positions based on at least one of a temperature of the exhaust gas and a temperature of the combustion engine.

[0007] In some embodiments, the first and second exhaust flow paths are disposed upstream of the at least one of the at least one of the oxidation catalyst and particulate filter.

[0008] In some embodiments, the first and second exhaust flow paths are disposed upstream of the first selective-catalytic-reduction catalyst.

[0009] In some embodiments, the second exhaust flow path includes a fluid injection port (e.g., a port through which urea, ammonia or any other reagent can be injected into the exhaust stream) disposed upstream of the second selective-catalytic-reduction catalyst.

[0010] In some embodiments, the aftertreatment system includes another fluid injection port disposed between the first selective-catalytic-reduction catalyst and the at least one of the oxidation catalyst and the particulate filter.

[0011] In some embodiments, the at least one of the oxidation catalyst and particulate filter is disposed in the first exhaust flow path.

[0012] In some embodiments, the aftertreatment system includes an oxidation catalyst and a particulate filter disposed directly adjacent and/or proximate to each other.

[0013] In some embodiments, the first selective-catalytic-reduction catalyst is disposed in the first exhaust flow path.

[0014] In some embodiments, the aftertreatment system includes an ammonia gas generator disposed upstream of at least one of the first and second selective-catalytic-reduction catalysts.

[0015] In another form, the present disclosure provides an aftertreatment system that may include first and second injection ports, first and second selective-catalytic-reduction catalysts, and at least one of an oxidation catalyst and a particulate filter. Reagent may be injected into the exhaust stream through the first injection port. The first selective-catalytic-reduction catalyst may be disposed downstream of the first injection port. The first selective-catalytic-reduction catalyst may be a low-temperature selective-catalytic-reduction catalyst. The oxidation catalyst and/or particulate filter may be disposed downstream of the low-temperature selective-catalytic-reduction catalyst. Reagent may be injected into the exhaust stream through the second injection port downstream of the oxidation catalyst and/or the particulate filter. The second selective-catalytic-reduction catalyst may be disposed downstream of the second injection port.

[0016] The first and second injection ports can be or include a DEF dosing system or urea or ammonia injector, nozzle or other orifice through which reagent can be injected into the exhaust stream.

[0017] In some embodiments, the aftertreatment system may include a low-temperature flow path, a bypass flow path, and a valve. The low-temperature flow path may include the first selective-catalytic-reduction catalyst. The bypass flow path may be isolated from the first selective-catalytic-reduction catalyst. The valve may be disposed upstream of the second selective-catalytic-reduction catalyst and may be movable between a first position allowing exhaust gas to flow through the low-temperature flow path and preventing exhaust gas from flowing through the bypass flow path and a second position allowing exhaust gas to flow through the bypass flow path and preventing exhaust gas from flowing through the low-temperature flow path.

[0018] In some embodiments, reagent is injected into the low-temperature flow path through the first injection port.

[0019] In some embodiments, the low-temperature flow path and the bypass flow path are disposed upstream of the at least one of the oxidation catalyst and particulate filter.

[0020] In some embodiments, the aftertreatment system includes a control module in communication with the valve and configured to cause the valve to move between the first and second positions based on at least one of a temperature of the exhaust gas and a temperature of the combustion engine.

[0021] In some embodiments, the bypass flow path includes the second selective-catalytic-reduction catalyst.

[0022] In some embodiments, the bypass flow path includes the second injection port.

[0023] In some embodiments, the aftertreatment system includes an ammonia gas generator disposed upstream of at least one of the first and second selective-catalytic-reduction catalysts.

[0024] In another form, the present disclosure provides an aftertreatment system that may include a low-temperature flow path, a bypass flow path and a valve. The low-temperature flow path may include a first selective-catalytic-reduction catalyst. The bypass flow path may include a second selective-catalytic-reduction catalyst. The bypass flow path may be isolated from the first selective-catalytic-reduction catalyst. The valve may be configured to receive exhaust gas from the combustion engine. The valve may be movable between a first position allowing exhaust gas to flow through the low-temperature flow path and preventing exhaust gas from flowing through the bypass flow path and a second position allowing exhaust gas to flow through the bypass flow path and preventing exhaust gas from flowing through the low-temperature flow path.

[0025] In some embodiments, the aftertreatment system includes a control module in communication with the valve and configured to cause the valve to move between the first and second positions based on at least one of a temperature of the exhaust gas and a temperature of the combustion engine.

[0026] In some embodiments, the aftertreatment system may include an oxidation catalyst and a particulate filter disposed upstream of the second selective-catalytic-reduction catalyst.

[0027] In some embodiments, the oxidation catalyst and the particulate filter are disposed upstream of the valve.

[0028] In some embodiments, the aftertreatment system includes another valve disposed upstream of the oxidation catalyst and the particulate filter and movable between a first position allowing exhaust gas to flow through the oxidation catalyst and the particulate filter and a second position allowing exhaust gas to flow through another flow path that is isolated from the oxidation catalyst and the particulate filter.

[0029] In some embodiments, the aftertreatment system includes an ammonia gas generator disposed upstream of at least one of the first and second selective-catalytic-reduction catalysts.

[0030] In another form, the present disclosure provides an aftertreatment system that may include first and second selective-catalytic-reduction catalysts and a control valve. The second selective-catalytic-reduction catalyst may be in fluid communication with the first selective-catalytic-reduction catalyst. The control valve may be in communication with the first and second selective-catalytic-reduction catalysts. The control valve may be movable between a first position causing exhaust gas to flow through the first selective-catalytic-reduction catalyst before flowing through the second selective-catalytic-reduction catalyst and a second position causing exhaust gas to flow through the second selective-catalytic-reduction catalyst before flowing through the first selective-catalytic-reduction catalyst.

[0031] In some embodiments, the aftertreatment system includes a control module in communication with the valve. The control module may be configured to cause the control valve to move between the first and second positions based on at least one of a temperature of the exhaust gas and a temperature of the combustion engine.

[0032] In some embodiments, the aftertreatment system includes an oxidation catalyst disposed upstream of the control valve.

[0033] In some embodiments, the aftertreatment system includes a particulate filter disposed upstream of the control valve.

[0034] In some embodiments, the aftertreatment system includes a downstream valve configured to receive exhaust gas after the exhaust gas has flowed through the first and second selective-catalytic-reduction catalysts.

[0035] In some embodiments, the downstream valve is movable between a first position allowing exhaust gas from the second selective-catalytic-reduction catalyst to flow through the downstream valve and preventing exhaust gas from flowing from the downstream valve to the first selective-catalytic-reduction catalyst and a second position allowing exhaust gas from the first selective-catalytic-reduction catalyst to flow through the downstream valve and preventing exhaust gas from flowing from the downstream valve to the second selective-catalytic-reduction catalyst.

[0036] In some embodiments, the aftertreatment system includes a control module that moves the downstream valve into its first position and the control valve into its first position substantially simultaneously. The control module may also move the downstream valve into its second position and the control valve into its second position substantially simultaneously.

[0037] In some embodiments, the aftertreatment system includes an ammonia gas generator disposed upstream of at least one of the first and second selective-catalytic-reduction catalysts.

[0038] In another form, the present disclosure provides an aftertreatment system for treating exhaust gas discharged from a combustion engine. The aftertreatment system may include first and second exhaust gas flow paths and first and second selective-catalytic-reduction catalysts. The first exhaust gas flow path may receive a first portion of the exhaust gas from the combustion engine. The first exhaust gas flow path may include an ammonia generator and an injection port through which a reagent is injected into the exhaust gas. The second exhaust gas flow path may receive a second portion of the exhaust gas from the combustion engine and may include at least one of a oxidation catalyst and a particulate filter. The first and second exhaust gas flow paths may be fluidly isolated from each other. The first selective-catalytic-

reduction catalyst may receive exhaust gas from the first and second exhaust gas flow paths. The second selective-catalytic-reduction catalyst may receive exhaust gas from the first and second exhaust gas flow paths. The second selective-catalytic-reduction catalyst may be a low-temperature selective-catalytic-reduction catalyst.

[0039] In some embodiments, the second selective-catalytic-reduction catalyst is disposed downstream of the first selective-catalytic-reduction catalyst.

[0040] In some embodiments, the second selective-catalytic-reduction catalyst is disposed upstream of the first selective-catalytic-reduction catalyst.

[0041] In some embodiments, the first exhaust gas flow path includes an inlet disposed downstream of a turbocharger.

[0042] In some embodiments, the first exhaust gas flow path includes an inlet disposed upstream of a turbocharger.

[0043] In some embodiments, the injection port is disposed downstream of the ammonia generator.

[0044] Further areas of applicability will become apparent from the description provided herein. The description and specific examples in this summary are intended for purposes of illustration only and are not intended to limit the scope of the present disclosure.

DRAWINGS

[0045] The drawings described herein are for illustrative purposes only of selected embodiments and not all possible implementations, and are not intended to limit the scope of the present disclosure.

[0046] Figure 1 is a schematic representation of an engine and aftertreatment system according to the principles of the present disclosure;

[0047] Figure 2 is a schematic representation of another aftertreatment system according to the principles of the present disclosure;

[0048] Figure 3 is a schematic representation of yet another aftertreatment system according to the principles of the present disclosure;

[0049] Figure 4 is a schematic representation of yet another aftertreatment system according to the principles of the present disclosure;

[0050] Figure 5 is a schematic representation of yet another aftertreatment system according to the principles of the present disclosure; and

[0051] Figure 6 is a schematic representation of yet another aftertreatment system according to the principles of the present disclosure.

[0052] Corresponding reference numerals indicate corresponding parts throughout the several views of the drawings.

DETAILED DESCRIPTION

[0053] Example embodiments will now be described more fully with reference to the accompanying drawings.

[0054] Example embodiments are provided so that this disclosure will be thorough, and will fully convey the scope to those who are skilled in the art. Numerous specific details are set forth such as examples of specific components, devices, and methods, to provide a thorough understanding of embodiments of the present disclosure. It will be apparent to those skilled in the art that specific details need not be employed, that example embodiments may be embodied in many different forms and that neither should be construed to limit the scope of the disclosure. In some example embodiments, well-known processes, well-known device structures, and well-known technologies are not described in detail.

[0055] The terminology used herein is for the purpose of describing particular example embodiments only and is not intended to be limiting. As used herein, the singular forms "a," "an," and "the" may be intended to include the plural forms as well, unless the context clearly indicates otherwise. The terms "comprises," "comprising," “including,” and “having,” are inclusive and therefore specify the presence of stated features, integers, steps, operations, elements, and/or components, but do not preclude the presence or addition of one or more other features, integers, steps, operations, elements, components, and/or groups thereof. The method steps, processes, and operations described herein are not to be construed as necessarily requiring their performance in the particular order discussed or illustrated, unless specifically identified as an order of performance. It is also to be understood that additional or alternative steps may be employed.

[0056] When an element or layer is referred to as being "on," “engaged to,” "connected to," or "coupled to" another element or layer, it may be directly on, engaged, connected or coupled to the other element or layer, or intervening elements or layers may be present. In contrast, when an element is referred to as being "directly on," “directly engaged to,” "directly connected to," or "directly coupled to" another element or layer, there may be no intervening elements or layers present. Other words used to describe the relationship between elements should be interpreted in a like fashion (e.g., “between” versus “directly between,” “adjacent” versus “directly adjacent,” etc.). As used herein, the term "and/or" includes any and all combinations of one or more of the associated listed items.

[0057] Although the terms first, second, third, etc. may be used herein to describe various elements, components, regions, layers and/or sections, these elements, components, regions, layers and/or sections should not be limited by these terms. These terms may be only used to distinguish one element, component, region, layer or section from another region, layer or section. Terms such as “first,” “second,” and other numerical terms when used herein do not imply a sequence or order unless clearly indicated by the context. Thus, a first element, component, region, layer or section discussed below could be termed a second element, component, region, layer or section without departing from the teachings of the example embodiments.

[0058] Spatially relative terms, such as “inner,” “outer,” "beneath," "below," "lower," "above," "upper," and the like, may be used herein for ease of description to describe one element or feature's relationship to another element(s) or feature(s) as illustrated in the figures. Spatially relative terms may be intended to encompass different orientations of the device in use or operation in addition to the orientation depicted in the figures. For example, if the device in the figures is turned over, elements described as "below" or "beneath" other elements or features would then be oriented "above" the other elements or features. Thus, the example term "below" can encompass both an orientation of above and below. The device may be otherwise oriented (rotated 90 degrees or at other orientations) and the spatially relative descriptors used herein interpreted accordingly.

[0059] Figure 1 depicts an exhaust gas aftertreatment system 10 for treating the exhaust output from an exemplary engine 12 to an exhaust passageway 14. A turbocharger 16 includes a driven member (not shown) positioned in an exhaust stream. During engine operation, the exhaust stream causes the driven member to rotate and provide compressed air to an intake passage (not shown) of the engine 12. It will be appreciated that the exhaust gas aftertreatment system 10 can also be used to treat exhaust output from a naturally aspirated engine or any other engine that does not include a turbocharger.

[0060] The exhaust aftertreatment system 10 may include a control valve 18, a bypass flow path 20, a low-temperature-treatment flow path 22, a first injector or injection port 24 (e.g., a diesel exhaust fluid (DEF) dosing system or urea or ammonia injector, nozzle or other orifice through which reagent can be injected into the exhaust stream), a first selective-catalytic-reduction (SCR) catalyst 26, a diesel oxidation catalyst (DOC) 28, a diesel particulate filter (DPF) 30, a second injector or injection port 32 (e.g., a DEF dosing system or urea or ammonia injector, nozzle or other orifice through which reagent can be injected into the exhaust stream), and a second SCR catalyst 34. The low-temperature-treatment flow path 22 may include the first injector 24 and the first SCR catalyst 26. The first injector 24 may inject a gaseous ammonia, for example, or any other reagent into the exhaust stream upstream of the first SCR catalyst 26. The first injector 24 may be disposed directly or indirectly adjacent and/or proximate to the first SCR catalyst 26.

[0061] The first SCR catalyst 26 may be a low-temperature SCR catalyst configured to effectively reduce NO_x from low-temperature exhaust gas (e.g., exhaust gas at 60-150 degrees Celsius or 60-250 degrees Celsius) that may be discharged from the engine 12 for a period of time following a cold start of the engine 12. For example, the first SCR catalyst 26 may include a metal oxide supported on titanium oxide (MO_x/TiO_2), a metal oxide supported on a titania-silica (TiO_2/SiO_2) mixed oxide support, or a metal oxide supported on a beta zeolite. Metals used for such catalysts could include ammonium metavenadate (V), manganese (Mn), iron (Fe), cobalt (Co), copper (Cu) or

cerium (Ce), for example. The metals may be loaded onto the TiO_2 support or the TiO_2/SiO_2 support by a wet-impregnation method, for example. The metals may be loaded onto the beta zeolite by a cation exchange method, for example. It will be appreciated that any suitable low-temperature SCR catalyst capable of effectively treating low-temperature exhaust gas could be employed.

[0062] Exhaust flowing through the bypass flow path 20 bypasses the first injector 24 and the first SCR catalyst 26. The control valve 18 may receive exhaust gas from the engine 12 and turbocharger 16 and may be movable between first and second positions. In the first position, the control valve 18 allows exhaust gas to flow through the low-temperature-treatment flow path 22 and restricts or prevents exhaust gas from flowing through the bypass flow path 20. In the second position, the control valve 18 allows exhaust gas to flow through the bypass flow path 20 and prevents exhaust gas from flowing through the low-temperature-treatment flow path 22. In some configurations, the control valve 18 may be movable to one or more intermediate positions between the first and second positions to allow a portion of the exhaust gas to flow through the bypass flow path 20 and another portion of the exhaust gas to flow through the low-temperature treatment flow path 22.

[0063] A control module 36 may control movement of the control valve 18 based on a temperature of the exhaust gas discharged from the engine 12 (measured by a temperature sensor in the exhaust stream), a temperature of engine coolant (measured by an engine coolant temperature sensor) and/or a runtime of the engine 12, for example. The control module 36 may cause the control valve 18 to move into the first position when the exhaust temperature or coolant temperature is below a predetermined value (between about 150 or 250 degrees Celsius, for example). The control module 36 may cause the control valve 18 to move into the second position once the exhaust temperature or coolant temperature rises above the predetermined value.

[0064] The control module 36 may include or be part of an Application Specific Integrated Circuit (ASIC); a digital, analog, or mixed analog/digital discrete circuit; a digital, analog, or mixed analog/digital integrated circuit; a combinational logic circuit; a field programmable gate array (FPGA); a processor

(shared, dedicated, or group) that executes code; memory (shared, dedicated, or group) that stores code executed by a processor; other suitable hardware components that provide the described functionality; or a combination of some or all of the above, such as in a system-on-chip. The control module 36 may be a part of or include a control unit controlling one or more other vehicle systems. Alternatively, the control module 36 may be a control unit dedicated to the exhaust aftertreatment system 10. The control module 36 may be in communication with and control operation of the control valve 18, the injectors 24, 32 and/or other aftertreatment components.

[0065] The DOC 28, the DPF 30, the second injector 32 and the second SCR catalyst 34 may be disposed downstream of the bypass flow path 20 and the low-temperature-treatment flow path 22. The DPF 30 may be disposed downstream of the DOC 28. The DPF 30 may be disposed directly or indirectly adjacent and/or proximate to the DOC 28. The second injector 32 may be disposed downstream of the DPF 30 and upstream of the second SCR catalyst 34. The second injector 32 may be disposed directly or indirectly adjacent and/or proximate to the second SCR catalyst 34. The second SCR catalyst 34 may be a normal-to-high-temperature SCR catalyst configured to effectively reduce NO_x from normal-to-high-temperature exhaust gas (e.g., exhaust approximately equal to or greater than about 150 degrees Celsius, or approximately equal to or greater than about 250 degrees Celsius) that may be discharged from the engine 12 under normal and/or high-load operating conditions.

[0066] With reference to Figure 2, another aftertreatment system 110 is provided that may treat the exhaust gas discharged from the engine 12. The aftertreatment system 110 may include a DOC 128, a DPF 130, an injector or injection port 124, a control valve 118, a low-temperature SCR catalyst 132, a normal-to-high-temperature SCR catalyst 134, and a control module 136. The structure and function of the DOC 128, DPF 130, injector 124, SCR catalysts 132, 134, and control module 136 may be similar or identical to that of the DOC 28, DPF 30, injector 24,32, SCR catalysts 26, 34, and control module 36,

respectively, apart from any exceptions described below and/or shown in the figures. Therefore, similar features will not be described again in detail.

[0067] The DOC 128 may receive exhaust gas from the engine 12 and turbocharger 16. The DPF 130 may be disposed downstream of the DOC 128. The injector 124 may inject ammonia (or another reagent) into the exhaust stream downstream of the DPF 130 and upstream of the control valve 118. The control valve 118 may be fluidly coupled to the low-temperature SCR catalyst 132 and the normal-to-high-temperature SCR catalyst 134. The low-temperature SCR catalyst 132 and the normal-to-high-temperature SCR catalyst 134 may be fluidly coupled to each other.

[0068] The control module 136 may cause the control valve 118 to move between first and second positions. In the first position, fluid received through an inlet 119 of the control valve 118 is routed along a first flow path 140 (indicated in dashed lines in Figure 2) in which the fluid flows from the control valve 118 to the low-temperature SCR catalyst 132, then to the normal-to-high-temperature SCR catalyst 134, then back to the control valve 118. The fluid then exits the control valve 118 through an outlet 121 before being discharged into the ambient environment. When the control valve 118 is in the second position, fluid received through the inlet 119 of the control valve 118 is routed along a second flow path 142 (indicated in solid lines in Figure 2) in which the fluid flows from the control valve 118 to the normal-to-high-temperature SCR catalyst 134, then to the low-temperature SCR catalyst 132, then back to the control valve 118. The fluid then exits the control valve 118 through the outlet 121 before being discharged into the ambient environment.

[0069] As described above, the control module 136 may control movement of the control valve 118 based on a temperature of the exhaust gas discharged from the engine 12, a temperature of engine coolant and/or a runtime of the engine 12, for example. The control module 136 may cause the control valve 118 to move into the first position when the exhaust temperature or coolant temperature is below a predetermined value (between about 150 or 250 degrees Celsius, for example). The control module 136 may cause the control valve 118

to move into the second position once the exhaust temperature or coolant temperature rises above the predetermined value.

[0070] With reference to Figure 3, another aftertreatment system 210 is provided that may treat the exhaust gas discharged from the engine 12. The aftertreatment system 210 may include a DOC 228, a DPF 230, an injector or injection port 224, a first control valve 218, a second control valve 220, a low-temperature SCR catalyst 232, a normal-to-high-temperature SCR catalyst 234, and a control module 236. The structure and function of the DOC 228, DPF 230, injector 224, SCR catalysts 232, 234, and control module 236 may be similar or identical to that of the DOC 28, DPF 30, injector 24,32, SCR catalysts 26, 34, and control module 36, respectively, apart from any exceptions described below and/or shown in the figures. Therefore, similar features will not be described again in detail.

[0071] The DOC 228 may receive exhaust gas from the engine 12 and turbocharger 16. The DPF 230 may be disposed downstream of the DOC 228. The injector 224 may inject ammonia (or other reagent) into the exhaust stream downstream of the DPF 230 and upstream of the first control valve 218. The first control valve 218 may be fluidly coupled to the low-temperature SCR catalyst 232 and the normal-to-high-temperature SCR catalyst 234. The low-temperature SCR catalyst 232 and the normal-to-high-temperature SCR catalyst 234 may be fluidly coupled to each other. The second control valve 220 may be fluidly coupled to the low-temperature SCR catalyst 232 and the normal-to-high-temperature SCR catalyst 234.

[0072] The control module 236 may cause the first and second control valves 218, 220 to move substantially simultaneously between first and second positions. When the control valves 218, 220 are in the first position, fluid received through an inlet 219 of the first control valve 218 is routed out of the first control valve 218 through a first outlet 221 along a first flow path 240 (indicated in dashed lines in Figure 3) to the low-temperature SCR catalyst 232. From the low-temperature SCR catalyst 232, the fluid flows to the normal-to-high-temperature SCR catalyst 234, and then into a first inlet 223 of the second control valve 220. The fluid then exits the second control valve 220 through an

outlet 225 before being discharged into the ambient environment. When the control valves 218, 220 are in the second position, fluid received through the inlet 219 of the first control valve 218 is routed out of the first control valve 218 through a second outlet 227 along a second flow path 242 (indicated in solid lines in Figure 3) to the normal-to-high-temperature SCR catalyst 234. From the normal-to-high-temperature SCR catalyst 234, the fluid flows to the low-temperature SCR catalyst 232, and then into a second inlet 229 of the second control valve 220. The fluid then exits the second control valve 220 through the outlet 225 before being discharged into the ambient environment.

[0073] As described above, the control module 236 may control movement of the valves 218, 220 based on a temperature of the exhaust gas discharged from the engine 12, a temperature of engine coolant and/or a runtime of the engine 12, for example. The control module 236 may cause the valves 218, 220 to move into the first position when the exhaust temperature or coolant temperature is below a predetermined value (between about 150 or 250 degrees Celsius, for example). The control module 236 may cause the valves 218, 220 to move into the second position once the exhaust temperature or coolant temperature rises above the predetermined value.

[0074] With reference to Figure 4, another aftertreatment system 310 is provided that may treat the exhaust gas discharged from the engine 12. The aftertreatment system 310 may include a first injector or injection port 324, a low-temperature SCR catalyst 326, a DOC 328, a DPF 330, a second injector or injection port 332 and a normal-to-high-temperature SCR catalyst 334. The structure and function of the injectors 324, 332, the SCR catalysts 326, 334, the DOC 328 and the DPF 330 may be similar or identical to that of the injectors 24, 32, the SCR catalysts 26, 34, the DOC 28 and the DPF 30, respectively, apart from any exceptions described below and/or shown in the figures. Therefore, similar features will not be described again in detail.

[0075] The first injector 324 may inject ammonia (or any other reagent) into the exhaust stream downstream of the engine 12 and turbocharger 16. The low-temperature SCR catalyst 326 may be disposed downstream of the first injector 324 and may be disposed directly or indirectly adjacent and/or proximate

to the first injector 324. The DOC 328 may be disposed downstream of the low-temperature SCR catalyst 326. The DPF 330 may be disposed downstream of the DOC 328 and may be directly or indirectly adjacent and/or proximate to the DOC 328. The second injector 332 may be disposed downstream of the DPF 330 and upstream of the normal-to-high-temperature SCR catalyst 334. The second injector 332 may be directly or indirectly adjacent and/or proximate to the normal-to-high-temperature SCR catalyst 334.

[0076] With reference to Figure 5, another aftertreatment system 410 is provided that may treat the exhaust gas discharged from the engine 12. The aftertreatment system 410 may include a first control valve 418, a bypass flow path 420, a low-temperature-treatment flow path 422, and a second control valve 424. A control module 426 may be in communication with and control operation of the first and second control valves 418, 424. The structure and function of the control module 426 may be similar or identical to that of the control module 36 described above, apart from any exceptions described herein and/or shown in the figures.

[0077] The bypass flow path 420 may be in fluid communication with the first and second control valves 418, 424 and may include a DOC 428, a DPF 430, a first injector or injection port 432, and a normal-to-high-temperature SCR catalyst 434. The DOC 428 and DPF 430 may be disposed between the first and second control valves 418, 424 and may be directly or indirectly adjacent and/or proximate to each other. The first injector 432 may inject ammonia (or another reagent) downstream of the DPF 430 and upstream of the second control valve 424. The normal-to-high-temperature SCR catalyst 434 may be disposed downstream of the second control valve 424. The structure and function of the DOC 428, the DPF 430, the first injector 432, and the normal-to-high-temperature SCR catalyst 434 may be similar or identical to that of the DOC 28, the DPF 30, the second injector 32, and the second SCR catalyst 34, respectively, apart from any exceptions described herein and/or shown in the figures.

[0078] The low-temperature-treatment flow path 422 may be in fluid communication with the first and second control valves 418, 424 and may

include a second injector or injection port 436 and a low-temperature SCR catalyst 438. The structure and function of the second injector 436 and the low-temperature SCR catalyst 438 may be similar or identical to that of the injector 24 and low-temperature SCR catalyst 26, respectively, apart from any exceptions described herein and/or shown in the figures. Therefore, similar features will not be described again in detail. Briefly, the second injector 436 may inject gaseous ammonia, for example, and/or another reagent into the exhaust stream in the low-temperature-treatment flow path 422 between the first and second control valves 418, 424. The low-temperature SCR catalyst 438 may be disposed downstream of the second control valve 424.

[0079] The control module 426 may move the first and second control valves 418, 424 substantially simultaneously between first and second positions. When the control valves 418, 424 are in the first position, fluid received through an inlet 419 of the first control valve 418 is routed out of the first control valve 418 through a first outlet 421 and into the low-temperature-treatment flow path 422. As described above, the second injector 436 may inject reagent into the low-temperature-treatment flow path 422 between the first and second control valves 424. Then, the exhaust stream may flow into a first inlet 423 of the second control valve 424 and exit the second control valve 424 through a first outlet 425. From the first outlet 425, the exhaust may flow through the low-temperature SCR catalyst 438 before being discharged to the ambient environment. The low-temperature-treatment flow path 422 may bypass the DOC 428, the DPF 430, the first injector 432 and the normal-to-high-temperature SCR catalyst 434.

[0080] When the control valves 418, 424 are in the second position, fluid received through the inlet 419 of the first control valve 418 is routed out of the first control valve 418 through a second outlet 427 and into the bypass flow path 420. From the second outlet 427, the fluid may flow through the DOC 428 and through the DPF 430 before reagent is injected into the exhaust stream by the first injector 432. Thereafter, the exhaust may flow into the second control valve 424 through a second inlet 429 and out of the second control valve 424 through a second outlet 431. From the second outlet 431, the exhaust may flow

through the normal-to-high-temperature SCR catalyst 434 before being discharged into the ambient environment.

[0081] As described above, the control module 426 may control movement of the control valves 418, 424 based on a temperature of the exhaust gas discharged from the engine 12, a temperature of engine coolant and/or a runtime of the engine 12, for example. The control module 426 may cause the control valves 418, 424 to move into the first position when the exhaust temperature or coolant temperature is below a predetermined value (between about 150 or 250 degrees Celsius, for example). The control module 426 may cause the control valves 418, 424 to move into the second position once the exhaust temperature or coolant temperature rises above the predetermined value.

[0082] In some configurations, the control module 426 may, under certain conditions, cause the first control valve 418 to be in the first position while the second control valve 424 is in the second position. While the control valves 418, 424 are in such positions, the exhaust gas may flow from the first control valve 418 through an upstream portion of the low-temperature-treatment flow path 422 (bypassing the DOC 428, the DPF 430 and first injector 432) and out of the second outlet 431 of the second control valve 424 to the normal-to-high-temperature SCR catalyst 434 before being discharged to the ambient environment.

[0083] In some configurations, the control module 426 may, under certain conditions, cause the first control valve 418 to be in the second position while the second control valve 424 is in the first position. While the control valves 418, 424 are in such positions, the exhaust gas may flow from the first control valve 418 through the DOC 428 and the DPF 430. From the DPF 430, the exhaust stream may flow into the second control valve 424 and exit the second control valve 424 through the first outlet 425. From the first outlet 425, the exhaust may flow through the low-temperature SCR catalyst 438 before being discharged to the ambient environment.

[0084] With reference to Figure 6, another aftertreatment system 510 is provided that may treat the exhaust gas discharged from the engine 12. The

aftertreatment system 510 may include a first exhaust gas flow path 512, a second exhaust gas flow path 514, a normal-to-high-temperature SCR catalyst 516 and a low-temperature SCR catalyst 518. While Figure 6 depicts the normal-to-high-temperature SCR catalyst 516 being upstream of the low-temperature SCR catalyst 518, in some embodiments, low-temperature SCR catalyst 518 may be disposed upstream of the normal-to-high-temperature SCR catalyst 516. The structure and function of the SCR catalysts 516, 518 may be similar or identical to that of the SCR catalysts 34, 26, respectively, apart from any exceptions described below and/or shown in the figures. Therefore, similar features will not be described again in detail.

[0085] The first exhaust gas flow path 512 may include an ammonia gas generator 520 and an injector or injection port 522 (e.g., an injector, nozzle and/or other orifice through which reagent can be injected into the exhaust stream). Figure 6 shows an inlet 524 of the first exhaust gas flow path 512 disposed downstream of the turbocharger 16. In some embodiments, however, the inlet 526 may be upstream of the turbocharger 16 so that fluid flowing through the first exhaust gas flow path 512 bypasses the turbocharger 16. The ammonia gas generator 520 may receive exhaust gas and convert urea (or another compound containing ammonia) to gaseous ammonia (or a gas containing ammonia). An outlet 526 of the first exhaust gas flow path 512 may be disposed upstream of the SCR catalysts 516, 518 such that the injector 522 may feed the exhaust and gaseous ammonia to the SCR catalysts 516, 518.

[0086] The second exhaust gas flow path 514 may include a DOC 528 and a DPF 530. The DOC 528 and DPF 530 may be disposed between the inlet 524 and outlet 526 of the first exhaust gas flow path 512. The DOC 528 may be upstream or downstream of the DPF 530. The structure and function of the DOC 528 and DPF 530 may be similar or identical to that of the DOC 28 and DPF 30 described above.

[0087] It will be appreciated that any of the aftertreatment systems 10, 110, 210, 310, 410 described above may include an exhaust flow path similar or identical to the first exhaust gas flow path 512 (e.g., including the ammonia gas generator 520 and/or injector or injection port 522) that may bypass the DOC,

DPF and/or one or more other components of the aftertreatment system 10, 110, 210, 310, 410.

[0088] The foregoing description of the embodiments has been provided for purposes of illustration and description. It is not intended to be exhaustive or to limit the disclosure. Individual elements or features of a particular embodiment are generally not limited to that particular embodiment, but, where applicable, are interchangeable and can be used in a selected embodiment, even if not specifically shown or described. The same may also be varied in many ways. Such variations are not to be regarded as a departure from the disclosure, and all such modifications are intended to be included within the scope of the disclosure.

CLAIMS

What is claimed is:

1. An aftertreatment system for treating exhaust gas discharged from a combustion engine, the aftertreatment system comprising:

at least one of an oxidation catalyst and a particulate filter configured to receive exhaust gas;

first and second selective-catalytic-reduction catalysts;

a valve disposed upstream of the first selective-catalytic-reduction catalyst and the at least one of the oxidation catalyst and particulate filter, the valve connected to first and second exhaust flow paths and movable between a first position allowing exhaust gas to flow through the first exhaust flow path and bypass the second exhaust flow path and a second position allowing exhaust gas to flow through the second exhaust flow path and bypass the first exhaust flow path, the second selective-catalytic-reduction catalyst is a low-temperature selective-catalytic-reduction catalyst and is disposed in the second exhaust flow path; and

a control module in communication with the valve and configured to cause the valve to move between the first and second positions based on an operating parameter of the combustion engine.

2. The aftertreatment system of Claim 1, wherein the first and second exhaust flow paths are disposed upstream of the at least one of the oxidation catalyst and particulate filter.

3. The aftertreatment system of Claim 2, wherein the first and second exhaust flow paths are disposed upstream of the first selective-catalytic-reduction catalyst.

4. The aftertreatment system of Claim 1, wherein the second exhaust flow path includes a fluid injection port disposed upstream of the second selective-catalytic-reduction catalyst.

5. The aftertreatment system of Claim 4, further comprising another fluid injection port disposed between the first selective-catalytic-reduction catalyst and the at least one of the oxidation catalyst and the particulate filter.

6. The aftertreatment system of Claim 1, wherein the at least one of the oxidation catalyst and particulate filter is disposed in the first exhaust flow path.

7. The aftertreatment system of Claim 6, wherein the first selective-catalytic-reduction catalyst is disposed in the first exhaust flow path.

8. An aftertreatment system for treating exhaust gas discharged from a combustion engine, the aftertreatment system comprising:

a first injection port through which reagent is injected into an exhaust stream;

a first selective-catalytic-reduction catalyst disposed downstream of the first injection port, the first selective-catalytic-reduction catalyst is a low-temperature selective-catalytic-reduction catalyst;

at least one of an oxidation catalyst and a particulate filter disposed downstream of the low-temperature selective-catalytic-reduction catalyst;

a second injection port through which reagent is injected into the exhaust stream downstream of the at least one of the oxidation catalyst and particulate filter; and

a second selective-catalytic-reduction catalyst disposed downstream of the second injection port.

9. The aftertreatment system of Claim 8, further comprising:

a low-temperature flow path including the first selective-catalytic-reduction catalyst;

a bypass flow path isolated from the first selective-catalytic-reduction catalyst; and

a valve disposed upstream of the second selective-catalytic-reduction catalyst and movable between a first position allowing exhaust gas to flow through the low-temperature flow path and preventing exhaust gas from flowing through the bypass flow path and a second position allowing exhaust gas to flow through the bypass flow path and preventing exhaust gas from flowing through the low-temperature flow path.

10. The aftertreatment system of Claim 9, wherein the first injection port provides reagent to the low-temperature flow path.

11. The aftertreatment system of Claim 10, wherein the low-temperature flow path and the bypass flow path are disposed upstream of the at least one of the oxidation catalyst and particulate filter.

12. The aftertreatment system of Claim 9, further comprising a control module in communication with the valve and configured to cause the valve to move between the first and second positions based on an operating parameter of the combustion engine.

13. The aftertreatment system of Claim 9, wherein the bypass flow path includes the second selective-catalytic-reduction catalyst.

14. The aftertreatment system of Claim 13, wherein the bypass flow path includes the second injection port.

15. An aftertreatment system for treating exhaust gas discharged from a combustion engine, the aftertreatment system comprising:

a low-temperature flow path including a first selective-catalytic-reduction catalyst;

a bypass flow path including a second selective-catalytic-reduction catalyst, the bypass flow path isolated from the first selective-catalytic-reduction catalyst; and

a valve configured to receive exhaust gas from the combustion engine and movable between a first position allowing exhaust gas to flow through the low-temperature flow path and preventing exhaust gas from flowing through the bypass flow path and a second position allowing exhaust gas to flow through the bypass flow path and preventing exhaust gas from flowing through the low-temperature flow path.

16. The aftertreatment system of Claim 15, further comprising a control module in communication with the valve and configured to cause the valve to move between the first and second positions based on an operating parameter of the combustion engine.

17. The aftertreatment system of Claim 15, further comprising an oxidation catalyst and a particulate filter disposed upstream of the second selective-catalytic-reduction catalyst.

18. The aftertreatment system of Claim 17, wherein the oxidation catalyst and the particulate filter are disposed upstream of the valve.

19. The aftertreatment system of Claim 18, further comprising another valve disposed upstream of the oxidation catalyst and the particulate filter and movable between a first position allowing exhaust gas to flow through the oxidation catalyst and the particulate filter and a second position allowing exhaust gas to flow through another flow path that is isolated from the oxidation catalyst and the particulate filter.

20. The aftertreatment system of Claim 15, further comprising an ammonia gas generator disposed upstream of at least one of the first and second selective-catalytic-reduction catalysts.

21. An aftertreatment system for treating exhaust gas discharged from a combustion engine, the aftertreatment system comprising:

a first selective-catalytic-reduction catalyst;

a second selective-catalytic-reduction catalyst in fluid communication with the first selective-catalytic-reduction catalyst;

a control valve in communication with the first and second selective-catalytic-reduction catalysts and movable between a first position causing exhaust gas to flow through the first selective-catalytic-reduction catalyst before flowing through the second selective-catalytic-reduction catalyst and a second position causing exhaust gas to flow through the second selective-catalytic-reduction catalyst before flowing through the first selective-catalytic-reduction catalyst.

22. The aftertreatment system of Claim 21, further comprising a control module in communication with the valve and configured to cause the control valve to move between the first and second positions based on an operating parameter of the combustion engine.

23. The aftertreatment system of Claim 21, further comprising an oxidation catalyst disposed upstream of the control valve.

24. The aftertreatment system of Claim 21, further comprising a particulate filter disposed upstream of the control valve.

25. The aftertreatment system of Claim 21, further comprising a downstream valve configured to receive exhaust gas after the exhaust gas has flowed through the first and second selective-catalytic-reduction catalysts.

26. The aftertreatment system of Claim 25, wherein the downstream valve is movable between a first position allowing exhaust gas from the second selective-catalytic-reduction catalyst to flow through the downstream valve and preventing exhaust gas from flowing from the downstream valve to the first selective-catalytic-reduction catalyst and a second position allowing exhaust gas from the first selective-catalytic-reduction catalyst to flow through the

downstream valve and preventing exhaust gas from flowing from the downstream valve to the second selective-catalytic-reduction catalyst.

27. The aftertreatment system of Claim 26, further comprising a control module that moves the downstream valve into its first position and the control valve into its first position substantially simultaneously and moves the downstream valve into its second position and the control valve into its second position substantially simultaneously.

28. The aftertreatment system of Claim 21, further comprising an ammonia gas generator disposed upstream of at least one of the first and second selective-catalytic-reduction catalysts.

29. An aftertreatment system for treating exhaust gas discharged from a combustion engine, the aftertreatment system comprising:

a first exhaust gas flow path receiving a first portion of the exhaust gas from the combustion engine, the first exhaust gas flow path including an ammonia generator and an injection port through which a reagent is injected into the exhaust gas;

a second exhaust gas flow path receiving a second portion of the exhaust gas from the combustion engine and including at least one of a oxidation catalyst and a particulate filter;

a first selective-catalytic-reduction catalyst receiving exhaust gas from the first and second exhaust gas flow paths; and

a second selective-catalytic-reduction catalyst receiving exhaust gas from the first and second exhaust gas flow paths, the second selective-catalytic-reduction catalyst is a low-temperature selective-catalytic-reduction catalyst.

30. The aftertreatment system of Claim 29, wherein the second selective-catalytic-reduction catalyst is disposed downstream of the first selective-catalytic-reduction catalyst.

31. The aftertreatment system of Claim 29, wherein the first exhaust gas flow path includes an inlet disposed downstream of a turbocharger.

32. The aftertreatment system of Claim 29, wherein the first exhaust gas flow path includes an inlet disposed upstream of a turbocharger.

33. The aftertreatment system of Claim 29, wherein the injection port is disposed downstream of the ammonia generator.

34. The aftertreatment system of Claim 1, wherein the operating parameter is selected from the group consisting of: a temperature of the exhaust gas, a temperature of the combustion engine, a coolant temperature, and a runtime of the combustion engine.

35. The aftertreatment system of Claim 12, wherein the operating parameter is selected from the group consisting of: a temperature of the exhaust gas, a temperature of the combustion engine, a coolant temperature, and a runtime of the combustion engine.

36. The aftertreatment system of Claim 16, wherein the operating parameter is selected from the group consisting of: a temperature of the exhaust gas, a temperature of the combustion engine, a coolant temperature, and a runtime of the combustion engine.

37. The aftertreatment system of Claim 22, wherein the operating parameter is selected from the group consisting of: a temperature of the exhaust gas, a temperature of the combustion engine, a coolant temperature, and a runtime of the combustion engine.

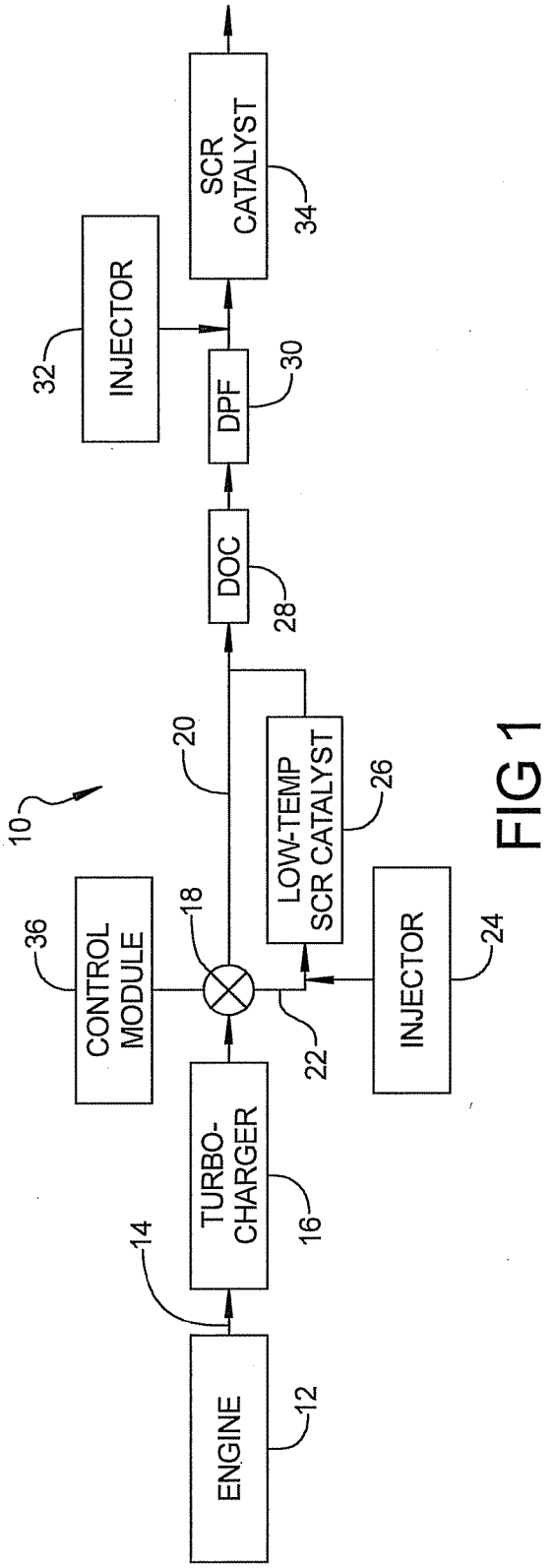
ENGINE
12
14
TURBO-CHARGER
16
CONTROL MODULE
36
18
20
22
LOW-TEMP SCR CATALYST
26
INJECTOR
24
DOC
28
DPF
30
32
INJECTOR
SCR CATALYST
34
10

FIG 1

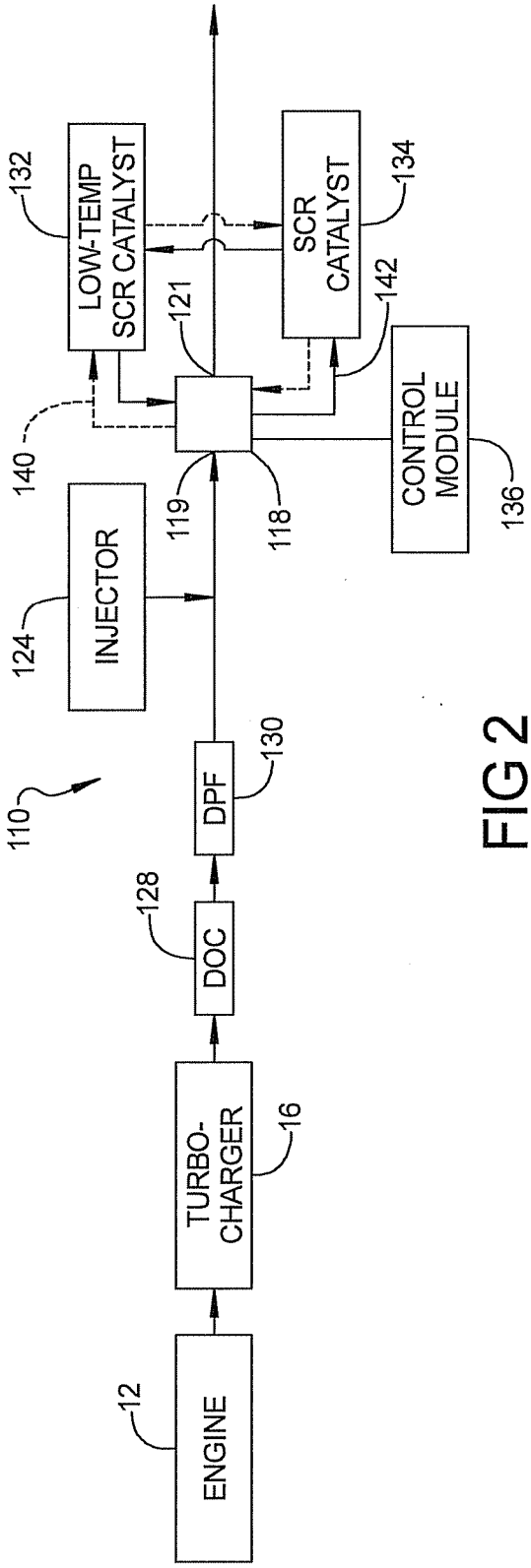
ENGINE
12
TURBO-CHARGER
16
DOC
128
DPF
130
110
INJECTOR
124
LOW-TEMP SCR CATALYST
132
SCR CATALYST
134
121
140
119
118
142
CONTROL MODULE
136

FIG 2

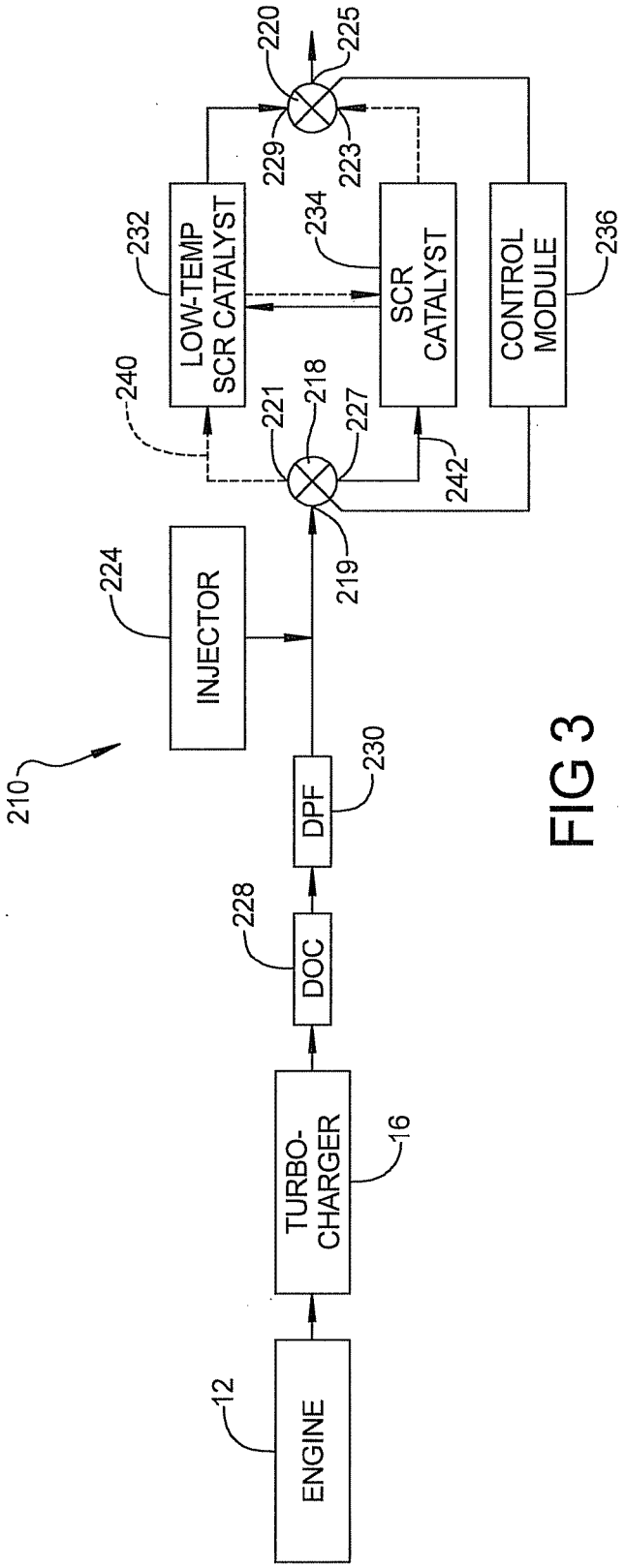
210
ENGINE
12
TURBO-CHARGER
16
DOC
228
DPF
230
INJECTOR
224
LOW-TEMP SCR CATALYST
232
SCR CATALYST
234
CONTROL MODULE
236
220
225
229
223
240
221
218
227
242
219

FIG 3

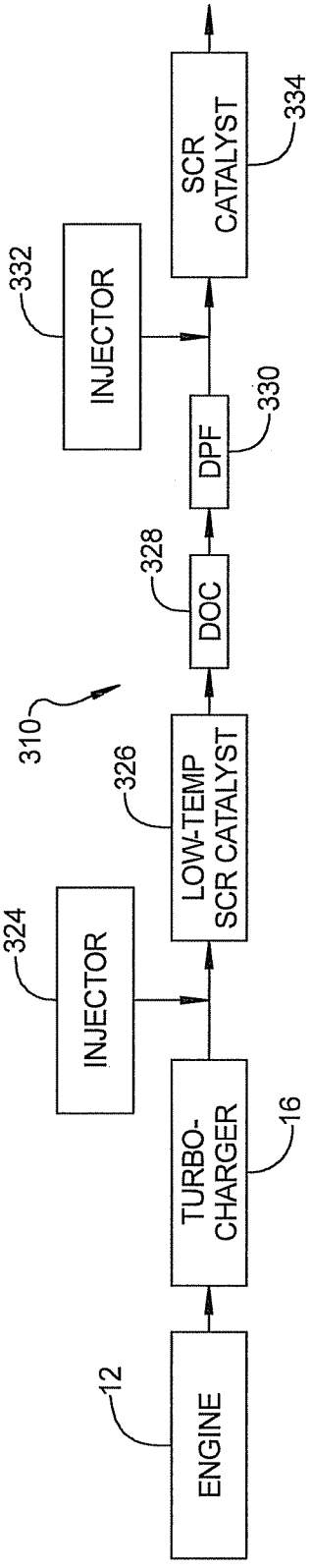
310
ENGINE
12
TURBO-CHARGER
16
INJECTOR
324
LOW-TEMP SCR CATALYST
326
DOC
328
DPF
330
INJECTOR
332
SCR CATALYST
334

FIG 4

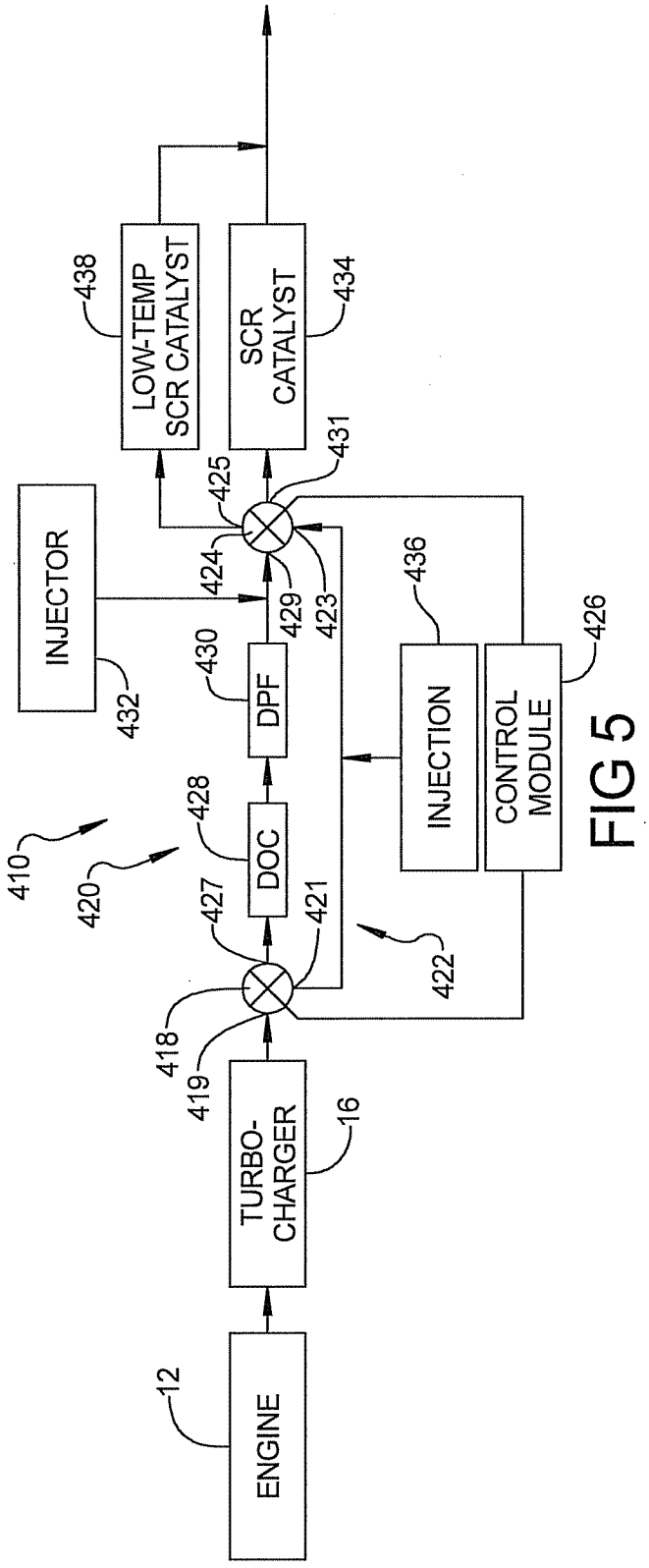
ENGINE
12
TURBO-CHARGER
16
418
419
427
421
422
DOC
428
DPF
430
INJECTION
436
CONTROL MODULE
426
410
420
INJECTOR
432
424
429
423
425
431
LOW-TEMP SCR CATALYST
438
SCR CATALYST
434

FIG 5

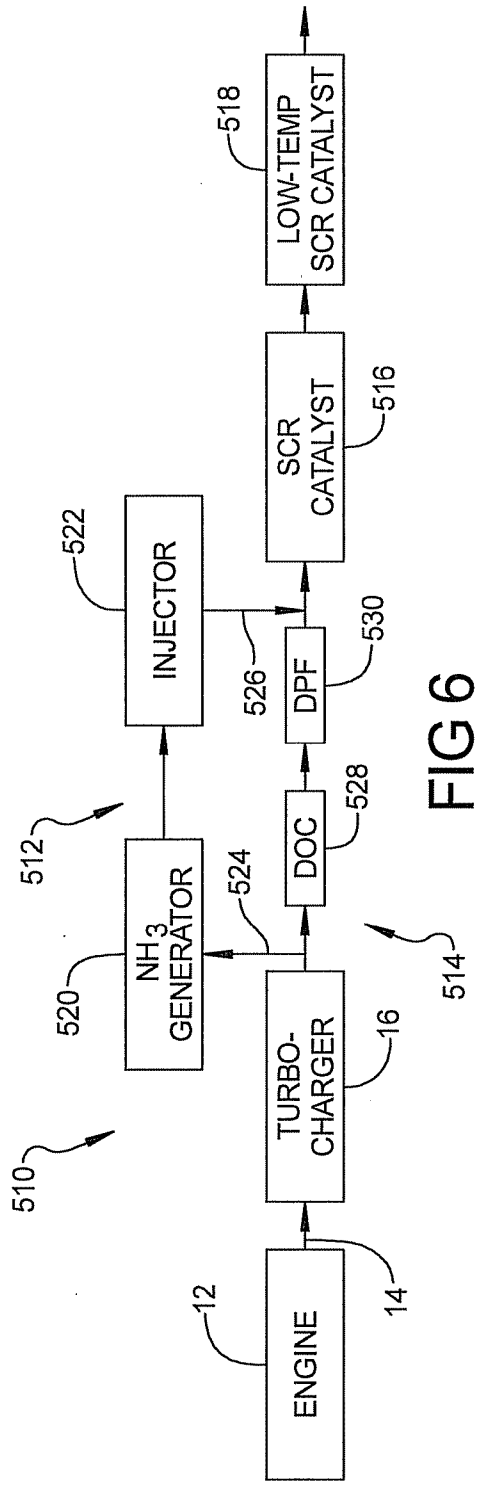
ENGINE
12
14
TURBO-CHARGER
16
510
512
520
NH3 GENERATOR
524
DOC
528
514
DPF
530
526
INJECTOR
522
SCR CATALYST
516
LOW-TEMP SCR CATALYST
518

FIG 6

INTERNATIONAL SEARCH REPORT

International application No.
PCT/US2015/032093

A. CLASSIFICATION OF SUBJECT MATTER

F01N 3/20(2006.01)i, F01N 9/00(2006.01)i, B01D 53/94(2006.01)i

According to International Patent Classification (IPC) or to both national classification and IPC

B. FIELDS SEARCHED

Minimum documentation searched (classification system followed by classification symbols)
F01N 3/20; B01D 53/94; B01J 21/04; F02D 41/02; F01N 3/18; F02D 23/00; F01N 9/00

Documentation searched other than minimum documentation to the extent that such documents are included in the fields searched
Korean utility models and applications for utility models
Japanese utility models and applications for utility models

Electronic data base consulted during the international search (name of data base and, where practicable, search terms used)
eKOMPASS(KIPO internal) & Keywords: aftertreatment, exhaust gas, engine, valve, SCR, DOC, DPF, bypass, cold start, temperature and injector

C. DOCUMENTS CONSIDERED TO BE RELEVANT

Category*	Citation of document, with indication, where appropriate, of the relevant passages	Relevant to claim No.
X	US 2011-0058999 A1 (ETTIREDDY et al.) 10 March 2011 See abstract; paragraphs [0028]-[0038]; and figures 1-2.	1-18,20,34-36
Y		19
A		21-33,37
Y	US 2011-0113759 A1 (TILINSKI et al.) 19 May 2011 See paragraphs [0052], [0075] and figure 1.	19
A	US 2012-0216529 A1 (JOSHI et al.) 30 August 2012 See abstract; paragraphs [0004]-[0007]; and figure 3.	1-37
A	US 2013-0219864 A1 (DAIMLER AG) 29 August 2013 See abstract; paragraphs [0002]-[0029]; and figure 1.	1-37
A	US 2013-0028818 A1 (ECKHOFF et al.) 31 January 2013 See abstract; paragraphs [0048]-[0051]; and figures 1-3.	1-37

☐ Further documents are listed in the continuation of Box C.

☒ See patent family annex.

* Special categories of cited documents:
"A" document defining the general state of the art which is not considered to be of particular relevance
"E" earlier application or patent but published on or after the international filing date
"L" document which may throw doubts on priority claim(s) or which is cited to establish the publication date of another citation or other special reason (as specified)
"O" document referring to an oral disclosure, use, exhibition or other means
"P" document published prior to the international filing date but later than the priority date claimed
"T" later document published after the international filing date or priority date and not in conflict with the application but cited to understand the principle or theory underlying the invention
"X" document of particular relevance; the claimed invention cannot be considered novel or cannot be considered to involve an inventive step when the document is taken alone
"Y" document of particular relevance; the claimed invention cannot be considered to involve an inventive step when the document is combined with one or more other such documents,such combination being obvious to a person skilled in the art
"&" document member of the same patent family

Date of the actual completion of the international search	Date of mailing of the international search report
21 August 2015 (21.08.2015)	**21 August 2015 (21.08.2015)**

Name and mailing address of the ISA/KR
International Application Division
Korean Intellectual Property Office
189 Cheongsa-ro, Seo-gu, Daejeon Metropolitan City, 302-701, Republic of Korea
Facsimile No. +82-42-472-7140

Authorized officer
LEE, Dal Kyong
Telephone No. +82-42-481-8440

INTERNATIONAL SEARCH REPORT

Information on patent family members

International application No.
PCT/US2015/032093

Patent document cited in search report	Publication date	Patent family member(s)	Publication date
US 2011-0058999 A1	10/03/2011	DE 112010003613 T5	08/11/2012
		US 8491845 B2	23/07/2013
		WO 2011-032020 A2	17/03/2011
		WO 2011-032020 A3	14/07/2011
US 2011-0113759 A1	19/05/2011	BR PI1004807A2	19/03/2013
		CN 102071994 A	25/05/2011
		DE 102009053950 A1	26/05/2011
		EP 2325452 A1	25/05/2011
		EP 2325452 B1	27/05/2015
		RU 2010147256 A	27/05/2012
		RU 2455504 C1	10/07/2012
		US 8726640 B2	20/05/2014
US 2012-0216529 A1	30/08/2012	WO 2012-118861 A1	07/09/2012
US 2013-0219864 A1	29/08/2013	DE 102005045294 A1	29/03/2007
		JP 2009-509084 A	05/03/2009
		JP 4681650 B2	11/05/2011
		US 2008-0314028 A1	25/12/2008
		US 2012-0067029 A1	22/03/2012
		US 8091339 B2	10/01/2012
		US 8429897 B2	30/04/2013
		US 8763366 B2	01/07/2014
		WO 2007-033751 A1	29/03/2007
US 2013-0028818 A1	31/01/2013	CA 2795331 A1	13/10/2011
		CN 102834596 A	19/12/2012
		DE 102010014468 A1	13/10/2011
		DE 102010014468 B4	31/10/2013
		EP 2556223 A1	13/02/2013
		EP 2556223 B1	07/01/2015
		JP 2013-524082 A	17/06/2013
		KR 10-2013-0040881 A	24/04/2013
		US 8512658 B2	20/08/2013
		WO 2011-124357 A1	13/10/2011