(19) Europäisches Patentamt
European Patent Office
Office européen des brevets

(11) EP 0 880 004 A2

(12) EUROPEAN PATENT APPLICATION

(43) Date of publication:
25.11.1998 Bulletin 1998/48

(51) Int. Cl.[6]: **F41H 7/04**

(21) Application number: **98108882.6**

(22) Date of filing: **15.05.1998**

(84) Designated Contracting States:
AT BE CH CY DE DK ES FI FR GB GR IE IT LI LU MC NL PT SE
Designated Extension States:
AL LT LV MK RO SI

(30) Priority: **21.05.1997 IT TO970108 U**

(71) Applicant: **FIAT AUTO S.p.A.**
10135 Torino (IT)

(72) Inventor: **Cattaneo, Maurizio**
10020 Pecetto (Torino) (IT)

(74) Representative:
Quinterno, Giuseppe et al
c/o JACOBACCI & PERANI S.p.A.
Corso Regio Parco, 27
10152 Torino (IT)

(54) A motor vehicle with doors provided with protection devices

(57) To the lower part of the inner face of a side door (2) there is connected a bullet-proof apron (4) capable of assuming a folded rest configuration (Figure 1) in which it lies within the outline of the door (2) and an unfolded use configuration (Figure 3) in which it extends downwardly covering the space between the lower edge of the door (2) and the ground.

FIG. 1

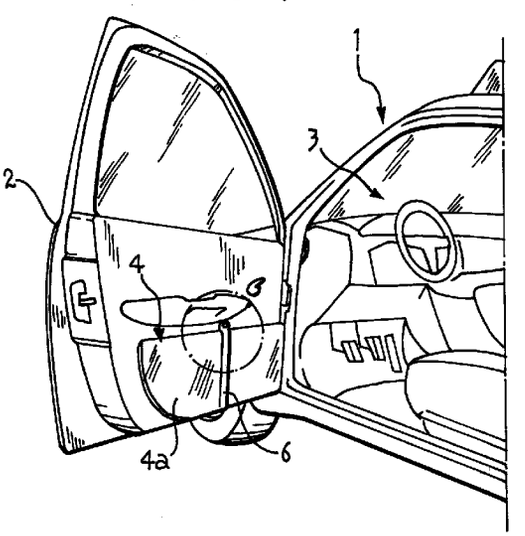

EP 0 880 004 A2

Description

The present invention relates to a motor vehicle with doors provided with protection devices.

The invention relates in particular to motor vehicles of the so-called "armoured" type, intended to be utilised for the forces of order or the like, or for the transport of persons subjected to a custodial regime or to a protective regime, such as, for example, magistrates, state functionaries etc.

In the case of an involvement in an armed conflict it is not infrequent that, in order to respond to the enemy fire, one or more of the occupants of such a motor vehicle opens a door, descends from the motor vehicle, and then returns fire using the door itself, which is usually of armoured type, as a shield.

In such an emergency situation the door used as a shield or barrier does not however offer total protection from the enemy fire in that the space between the lower edge of the door and the ground is not protected.

The object of the invention is to propose a motor vehicle which allows this disadvantage to be remedied.

This and other objects are achieved according to the invention by a motor vehicle characterised in that the lower part of the inner face of at least one side access door of the passenger compartment has a bullet-proof apron connected to it, capable of assuming a folded rest configuration in which it lies within the outline of the door, and an unfolded, use configuration, in which it extends downwardly covering the space between the lower edge of the door and the ground.

Further characteristics and advantages of the invention will become apparent from the following detailed description made purely by way of non-limitative example, with reference to the attached drawings, in which:

Figure 1 is a partial perspective view of a motor vehicle according to the invention, with a bullet-proof apron shown in the folded rest position;
Figure 2 is a partial perspective view which shows a bullet-proof apron being unfolded from a motor vehicle according to the invention; and
Figure 3 is a partial perspective view of the motor vehicle of Figure 1 with a bullet-proof apron unfolded into the use condition.

In Figures 1 and 3 of the attached drawings the reference numeral 1 generally indicates a motor vehicle with at least one side access door 2 to the passenger compartment.

To the lower part of the inner face of the door 2 there is connected a bullet-proof apron generally indicated 4.

The apron 4 has a structure of type known per se, suitable to stop projectiles from firearms.

In the exemplary embodiment illustrated the bullet-proof apron 4 comprises two portions of sheets 4a and 4b (Figure 3) interconnected together and articulated along a substantially horizontal fold line 5.

The sheet 4a of the apron 4 has its edge fixed to the inner face of the door 2 with means of a type known per se, such as screws or rivets or other.

The bullet-proof apron 4 can assume a folded rest configuration, shown in Figure 1, in which the two sheets 4a and 4b are juxtaposed over one another. In this condition the apron 4 lies within the shape of the door 2 and is retained and fixed to the door by means of a flexible retaining strap 6. This strap conveniently has one end securely fixed to the door 2 or to the apron 4 and the other end attachable to the door by means of a press stud such as that indicated 7 in Figure 2.

The arrangement is conveniently such that when the retaining strap 6 is released from the door the bullet-proof apron 4 can unfold and automatically assume, by the action of gravity, the use configuration shown in Figure 3, in which it covers the space between the lower edge of the door 2 and the ground, cooperating with the door 2 itself to offer a more complete and secure shield for a person intending to respond to enemy fire in one of the above-described emergency situations.

Naturally, the principal of the invention remaining the same, the embodiments and details of construction can be widely varied with respect to what has been described and illustrated purely by way of non-limitative example, the invention extending to all embodiments which achieve the same effect by the same inventive concept.

In particular, the invention is not limited to the application of a bullet-proof apron to a single door of the motor vehicle, such an apron could be provided at least on the front side doors if not on all access doors of the passenger compartment of the motor vehicle itself.

Claims

1. A motor vehicle (1) with at least one side door (2) for access to the passenger compartment (3);

   characterised in that to the lower part of the inner face of the said door (2) is connected a bullet-proof apron (4) which can assume a folded rest configuration (Figure 1) in which it lies within the outline of the door (2), and an unfolded use configuration (Figure 3) in which it extends downwardly covering the space between the lower edge of the door (2) and the ground.

2. A motor vehicle according to Claim 1, characterised in that the said bullet-proof apron (4) comprises a plurality of portions or sheets (4a, 4b) interconnected along substantially horizontal fold lines (5).

3. A motor vehicle according to Claim 1 or Claim 2, characterised in that the bullet-proof apron (4) is

associated with a releasable retaining device (6, 7) operable to retain it fixed to the door (2) in the said folded configuration; the arrangement being such that upon release of the said retaining device (6, 7) the apron can unfold and automatically assume the use configuration (Figure 3) by gravity.

4. A motor vehicle according to Claim 3, characterised in that the said retaining device comprises a flexible strap (6) with one end securely fixed to the door (2) or to the bullet-proof apron (4) and the other end attachable to the door (2) by means of a fixing device such as a press stud (7) or the like.

FIG. 1

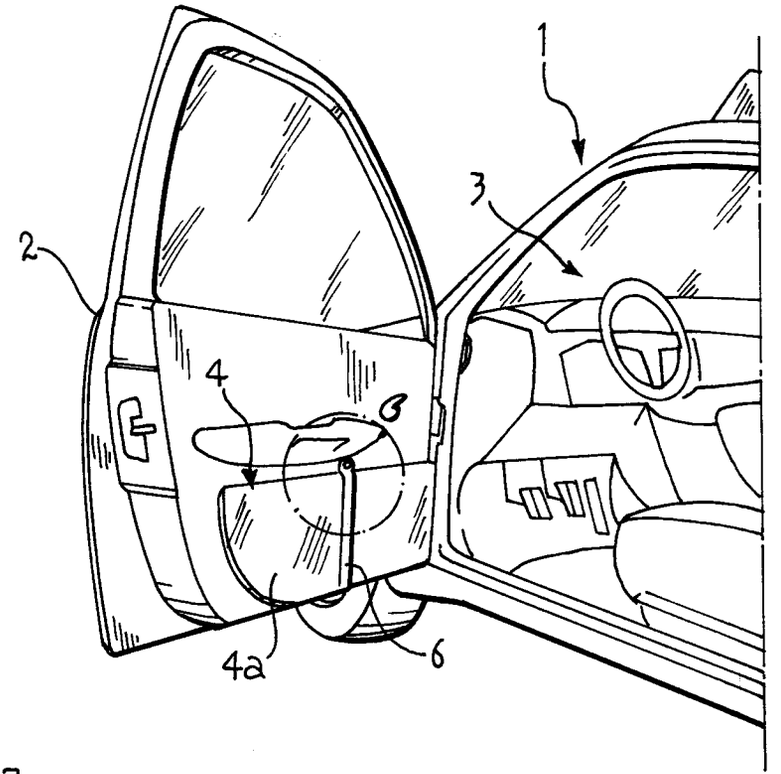

FIG. 2

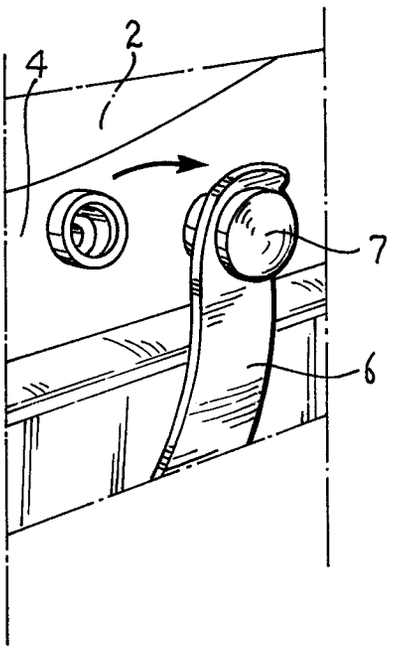

FIG. 3

