Feb. 23, 1965 R. HEGLAND 3,170,862

REINFORCED CONCRETE STRUCTURE IN AN ELECTROLYTIC FURNACE HOUSE FOR PRODUCING ALUMINUM

Filed Oct. 10, 1961

Fig. 1.

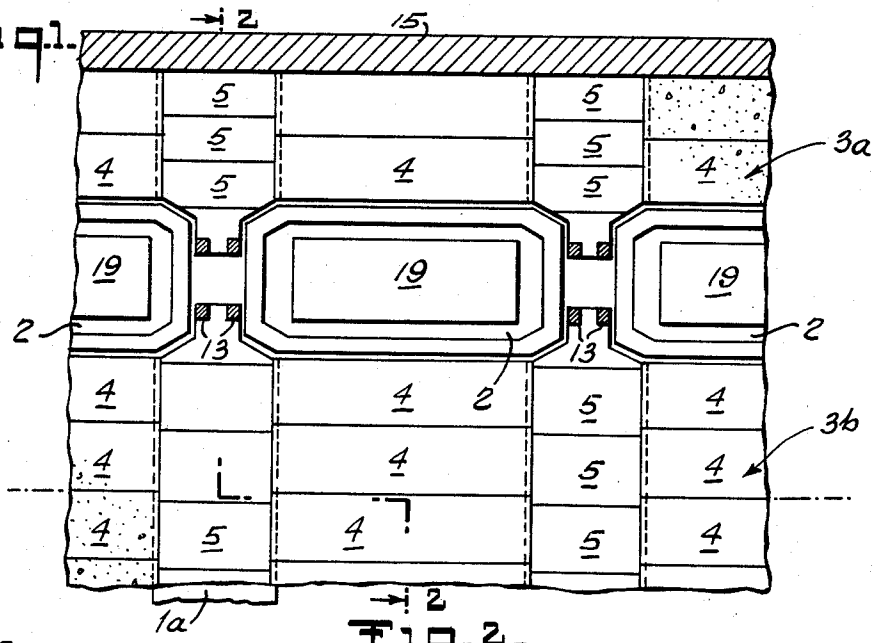

Fig. 2.

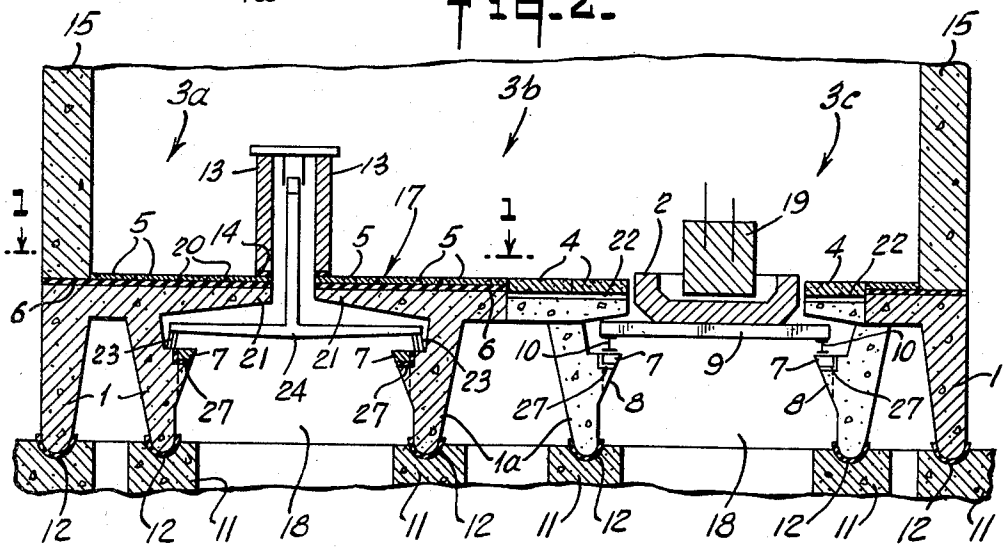

Fig. 3.

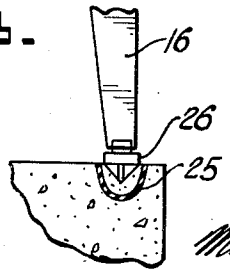

INVENTOR
REIDAR HEGLAND
BY
Morrison, Kennedy & Campbell
ATTORNEYS:

United States Patent Office

3,170,862

Patented Feb. 23, 1965

1

3,170,862

REINFORCED CONCRETE STRUCTURE IN AN ELECTROLYTIC FURNACE HOUSE FOR PRODUCING ALUMINUM

Reidar Hegland, Zurich, Switzerland, assignor to Swiss Aluminium Ltd., Chippis, Switzerland, a joint-stock company of Switzerland

Filed Oct. 10, 1961, Ser. No. 144,095
Claims priority, application Switzerland, Oct. 14, 1960, 11,522/60
9 Claims. (Cl. 204—244)

The present invention relates to a reinforced concrete structure in an electrolytic furnace house for producing aluminum.

Electrolytic furnaces used in the production of aluminum from a fluoride melt by the usual processes include essentially rectangular pots arranged in straight rows in a furnace house and anode structures including anodes dipping into the pots. The pots may be situated at floor level and are advantageously directly supported on foundations or brackets arranged under the floor. These foundations or brackets, and indeed the whole of the lower part of the building, normally consists of reinforced concrete. The anode structures of the furnaces are carried by steel supports or by pillars of reinforced concrete, which may extend up from the floor or which may have their foundations below the floor.

In modern electrolytic installations, a large number of furnaces, all requiring a current of 80,000 amperes and even more, are connected in series. In such installations, potential differences of several hundred volts wtih respect to earth exist; on the rectifying side, the potential difference may be up to 1,000 volts and even more. It is practically impossible to electrically insulate completely all the furnaces, bus bars and waste gas conduits from the building structure. Hence, stray currents will always flow into the reinforced concrete structure. Concrete, being an electric conductor when damp, and being a semi-conductor when dry, cannot under any circumstances be regarded as an insulator. Stray currents flowing through the concrete may reach the reinforcement and flow through said reinforcement, heating thereby the reinforcement. The resulting thermal expansion of the reinforcement causes cracks in the concrete, and the electrolytic action of the current anodically oxidizes the ferrous reinforcement, causing it to rust. Also, stray currents create current losses and are a source of danger to the operators.

One object of the present invention is to provide a new and improved reinforced concrete structure which supports the electrolytic furnaces in a furnace or pot house for the production of aluminum, and which avoids the drawbacks of the prior art described above.

According to the present invention, the reinforced concrete structure for supporting the furnace is divided into separate sections, which are electrically insulated in vertical and horizontal direction from one another, from earth and eventually from the walls of the building.

The complete structure normally includes a sub-floor, which may be itself made of reinforced concrete, and it is not necessary to divide this into sections insulated from one another. What is important is to divide the structure that consists of the floor and the vertical supports into such sections. This sectionalized structure advantageously rests on foundation pedestals extending into the ground and is separated from these pedestals by electrically insulating layers.

The sections may constitute islands of reinforced concrete which are vertically insulated from one another by the space between them, the furnace pots being arranged between the islands. The floor may be formed by concrete slabs carried by but electrically insulated from the

2

islands, and by bridging slabs extending between the islands and electrically insulated from them. An island may support more than one floor slab and these slabs are preferably electrically insulated from one another. Such slabs on islands may be cast in situ or be pre-cast.

The electrical insulation may be formed by layers of a plastic, which may be an epoxy or polyester resin applied by pouring or spraying and which is preferably reinforced by glass fibres. For instance, the slabs of the floor may be made, and insulated from the concrete island that supports them, by first pouring a layer of polyester resin onto the island. A glass fibre mat is placed on this layer and pressed in, and another layer of polyester resin may be applied. After the layer of the resin has hardened, the floor slabs are cast in concrete and the separating joints between them are filled by pouring in polyester resin. Electrical measurements made between a copper plate placed on a floor slab and electrodes concreted into an island below it have shown that, with 220 volts A.C. across the electrodes the resistance between them is multiplied more than one hundred times by the intermediate layer of plastic, provided the concrete is fully set.

The preferred construction according to the invention will now be described in detail with reference to the accompanying drawings, in which:

FIGURE 1 is a horizontal somewhat diagrammatic section of a part of a furnace house embodying the present invention, taken on lines 1—1 of FIG. 2;

FIGURE 2 is a somewhat diagrammatic section through the whole width of the furnace house, taken on the lines 2—2 of FIGURE 1; and

FIGURE 3 shows in section a modification of a portion of the structure of the furnace house in accordance with the present invention.

Referring to FIGS. 1 and 2 of the drawings, the furnace house shown has side walls **15** spanned by a floor **17** which lies above a basement chamber **18**. Furnace pots **2** containing fluoride melts into which anodes **19** dip are disposed at the level of the floor **17** in holes left in the floor, and each pot is carried on a grate **9** which projects laterally to rest on I-girders **10**. The I-girders **10** are carried by the reinforced concrete structure which as a whole rests on a sub-structure comprising foundation pedestals **11** extending into the ground. The reinforced concrete structure comprises side-supports **1** and central-supports **1a** built as separate islands with cantilever extensions **21** and with brackets **8** for the support of the girders **10**. These brackets **8** are constructed so that the pots **2** can be lowered between the brackets and removed for repair or replacement.

The reinforced concrete structure that supports the furnaces is insulated from the sub-structure that consists essentially of the pedestals **11** by troughs **12** consisting of a polyester resin reinforced by glass fibre. The connections between the reinforced concrete structure and the pedestals **11** may be formed by suspending each trough **12** in the shuttering in which the corresponding pedestal is formed, and pouring the concrete beneath the trough to form the corresponding pedestal.

The pots **2** are arranged in two rows, and in each row, the openings that receive the pots are all connected with one another, so that there is a continuous division of the floor into three longitudinal parts **3a**, **3b**, **3c**, electrically separated from one another.

The brackets **8** have load-bearing coverings **7** on which the girders **10** rest and each covering **7** is electrically insulated from the remainder of the bracket by insulation **27**.

The extensions **21** of the side supports **1** project inwardly from each side of the house and have narrow ends extending into the spaces between adjacent furnace pots

2. In addition, the extensions 21 of the central vertical supports 1*a* have similar narrow ends projecting outwardly from the center line of the house into the same spaces.

The floor 17 is composed in part of concrete slabs 5 on the tops of the islands 1 and 1*a* separated by insulations 20 and in part of slabs 4 bridging the islands. The slabs 5 are formed on top of insulating layers 6 in the manner described above, and in the parts of the floor between the rows of furnace pots 2, these slabs 5 do not wholly cover the tops of the islands but extend short of the sides of these islands to define ledges on these islands to receive the ends of the slabs 4, which are prefabricated. Insulation 22 is interposed between the slabs 4 and these ledges.

Pillars 13 provided to support the anodic parts of the furnaces rest on the cantilever extensions with the interposition of insulation 14. These pillars 13 carry the anodes 19 in the usual way, the anodes being fed with current through bus bars 23 and conductors 24.

The furnace house, of course, includes a superstructure including walls 15 and a roof not shown and this is insulated from the structure that carries the furnace pots 2 by the insulating layer 6. Alternatively, the walls 15 may be of a metal framework 16 with a covering, as shown in FIGURE 3, and in such a case a trough 25, similar to the trough 12 may be let into the top of the structure immediately below the wall, and steel pins and plates 26 may then be concreted into the trough to form supports for the framework 16.

If it is necessary for reinforcement to extend through any joint, e.g. through the joint between the pillars 13 and extensions 21 beneath them, the reinforcing rods will tend to conduct current and destroy the effect of the insulation, such as that shown at 14. To remedy this, the reinforcing rods may be coated with a firmly adherent coating of an electrical insulating plastic, to which grains of sand may be bonded, all as described and claimed in copending application Serial No. 120,624 filed June 29, 1961, now abandoned.

The different insulations referred to may comprise a resin, such as an epoxy resin, or a polyester resin reinforced with glass fibres, as described.

What is claimed is:

1. A furnace house for furnace pots used in the electrolytic production of aluminum, comprising side walls, and means for supporting a plurality of furnace pots between said walls comprising a foundation structure, a floor supporting reinforced concrete structure supported on said foundation structure and constituting a plurality of sections extending between said walls and said furnace pots, means for supporting the furnace pots on said sections, and means electrically insulating said sections in all directions from each other, from the earth, from said foundation structure and from said furnace walls.

2. A furnace house as described in claim 1, wherein said sections comprise supports seated on said foundation structure and electrically insulated therefrom, and said supports have cantilever extensions for supporting the floor.

3. A furnace house as described in claim 1, wherein said foundation structure comprises foundation pedestals extending into the ground and said sections have supports seated on said pedestals but separated therefrom by electrically insulating layers.

4. A furnace house for furnace pots used in the electrolytic production of aluminum, comprising side walls and means for supporting a plurality of furnace pots between said walls comprising a foundation structure, a floor supporting reinforced concrete structure supported on said foundation structure and constituting a plurality of spaced sections, means for supporting the furnace pots on said sections, means electrically insulating said sections in all directions from each other, from the earth, from said foundation structure and from said furnace walls, and floor slabs bridging said sections and electrically insulated therefrom.

5. A furnace house for furnace pots used in the electrolytic production of aluminum, comprising side walls, and means for supporting a plurality of furnace pots between said walls arranged end to end substantially in a row along one of said walls and comprising a foundation structure, a floor supporting reinforced concrete structure supported on said foundation structure and constituting a plurality of sections, at least some of which are arranged along said wall and extend from the vicinity of said wall inwardly towards the vicinity of said row of furnace pots, means for supporting the furnace pots on said sections, and means electrically insulating said sections in all directions from each other, from the earth, from said foundation structure and from said furnace walls.

6. A furnace house for furnace pots having anodic parts and used in the electrolytic production of aluminum, comprising side walls, and means for supporting a plurality of furnace pots in a row end to end between said walls comprising a foundation structure, a floor supporting reinforced concrete structure supported on said foundation structure and constituting a plurality of sections extending in spaced relationship along said row of pots on opposite sides of said row and extending into the regions between the ends of said pots, means for supporting the furnace pots on said sections, means for supporting said anodic parts on said sections in the regions between the ends of said pots, and means electrically insulating said sections in all directions from each other, from the earth, from said foundation structure, from said furnace walls and from said anodic parts.

7. A furnace house for furnace pots used in the electrolytic production of aluminum comprising side walls, and means for supporting between said walls a plurality of furnace pots arranged in substantially parallel rows and comprising a foundation structure, a floor supporting reinforced concrete structure supported on said foundation structure and constituting a plurality of sections, some of which extend from some of said furnace walls inwardly towards the adjacent rows of pots and others of which extend between the rows of pots, means for supporting the furnace pots on said sections, and means electrically insulating said sections in all directions from each other, from the earth, from said foundation structure and from said furnace walls.

8. A furnace house for furnace pots used in the electrolytic production of aluminum, comprising side walls, means for supporting between said walls a plurality of furnace pots arranged in a row end to end comprising a foundation structure, a floor supporting structure supported on said foundation structure and constituting a plurality of sections extending in spaced relationship along said row of pots on opposite sides of said row and extending into the regions between the end of the pots, means for supporting the furnace pots on said sections, and means electrically insulating said sections in all directions from each other, from the earth, from said foundation structure and from said furnace walls, and bridging concrete slabs extending between said sections and electrically insulated from said sections.

9. A furnace house for furnace pots having anodic parts and used in the electrolytic production of aluminum, comprising side walls, means for supporting between said walls a plurality of furnace pots arranged in a plurality of substantially parallel rows with the pots in each row extending end to end comprising a foundation structure, a floor supporting reinforced concrete structure supported on said foundation structure and constituting a plurality of sections, some of which are spaced along the rows of pots and extend from some of said furnace walls inwardly towards the adjacent rows of pots into the regions between the ends of the pots in said adjacent rows, and others of which are spaced along the rows of pots and extend between the rows of pots in the regions between the ends

of the pots in the latter rows of pots, means for supporting the furnace pots on said sections, means for supporting the anodic parts on said sections between the ends of the pots, and means electrically insulating said sections in all directions from each other, from the earth, from said foundation structure, from said furnace wall, from said anodic parts and from said pots, and floor slabs bridging said sections along the rows of pots and electrically insulated from said sections.

References Cited in the file of this patent

UNITED STATES PATENTS

2,830,940	Hood	Apr. 15, 1958
2,874,103	Syz et al.	Feb. 17, 1959
2,980,596	Conway	Apr. 18, 1961
3,042,604	Hegland	July 3, 1962