(19) Europäisches Patentamt
European Patent Office
Office européen des brevets

(11) EP 1 512 928 A2

(12) **EUROPEAN PATENT APPLICATION**

(43) Date of publication:
09.03.2005 Bulletin 2005/10

(51) Int Cl.[7]: **F25D 25/02**

(21) Application number: **04104092.4**

(22) Date of filing: **26.08.2004**

(84) Designated Contracting States:
AT BE BG CH CY CZ DE DK EE ES FI FR GB GR HU IE IT LI LU MC NL PL PT RO SE SI SK TR
Designated Extension States:
AL HR LT LV MK

(30) Priority: **08.09.2003 IT MI20030401**

(71) Applicant: **WHIRLPOOL CORPORATION**
Benton Harbor Michigan 49022 (US)

(72) Inventor: **Sessa, Luigi Whirlpool Europe s.r.l.**
21025, Comerio (IT)

(74) Representative: **Guerci, Alessandro**
Whirlpool Europe S.r.l.
Patent Department
Viale G. Borghi 27
21025 Comerio (VA) (IT)

(54) **Device for adjusting the shelf height within a refrigerator preservation compartment**

(57) A device for adjusting the height of shelves (12, 13) within a refrigerator preservation compartment (1), this latter comprising side walls (4) and an end wall (5), on said side walls (4) there being provided supports for supporting end projecting parts (11) of the shelves on which food to be preserved is placed, and enabling said shelves (12, 13) to be positioned at different heights within said compartment (1). The supports are defined by pairs of support elements (10) having an elongate body (15) presenting a plurality of recesses (25) opening into a side (21) of said body (15), said recesses (25) being arranged to contain the end projecting parts (11) of the shelves (12, 13).

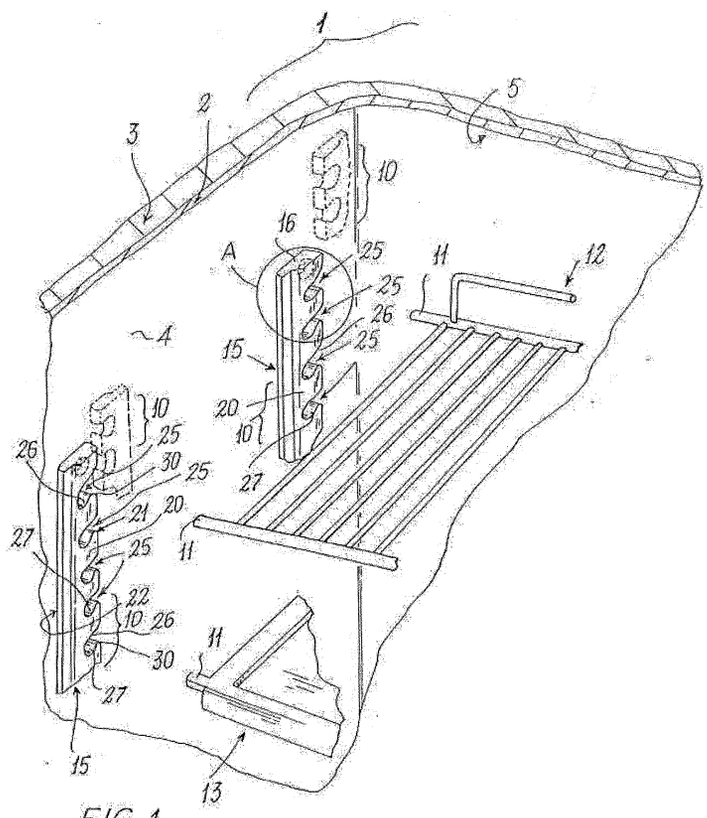

FIG. 1

EP 1 512 928 A2

Description

[0001] The present invention relates to a device for adjusting the shelf height within a refrigerator preservation compartment in accordance with the introduction to the main claim.

[0002] Various devices have already been proposed for adjusting the shelf height within the refrigerator compartment. These solutions allow only "rough" adjustments, in the sense of adjustments by which the overlying shelves within the preservation compartment are moved relative to each other by large distances.

[0003] Other devices enabling substantially continuous shelf height adjustment have also been proposed. Such devices are however costly and difficult to apply to the refrigerator.

[0004] An object of the present invention is to provide a device for adjusting the shelf height within a refrigerator preservation compartment which enables this height to be "finely" adjusted, while being of low cost and simple to apply to the refrigerator.

[0005] Another object is to provide a device of the stated type which the user finds easy to use.

[0006] These and further objects which will be apparent to the expert of the art are attained by a device in accordance with the accompanying claims. The present invention will be more apparent from the accompanying drawing, which is provided by way of non-limiting example and in which:

Figure 1 is a schematic exploded perspective view of the interior of a refrigerator compartment incorporating a device of the invention to which various shelves are applied;
Figure 2 is an enlarged view of the detail indicated by A in Figure 1; and
Figure 3 is a section on the line 3-3 of Figure 2.

[0007] With reference to said figures, a refrigerator preservation compartment is indicated overall by 1 and comprises a casing 2 insulated by usual foamed material 3. This compartment is defined by side walls 4 (only one visible in the figure) and an end wall 5, and is open on one side, where a usual door (not shown) is located.

[0008] Pairs of support elements 10 are disposed at the same height on the side walls 4 to support projecting parts 11 of shelves 12 and 13 (which can be of metal, as the shelf 12, or of glass, as the shelf 13). These elements 10 comprise along the corresponding wall 4 an elongate body 15 presenting a face 16 resting against the side wall 4 of the compartment 1 and from which there project pegs 17 (only one visible in Figure 3) to cooperate by interference with seats 18 provided in the insulated casing 2 in order to centre the body 15 on said insulated casing 2; usual fixing members (for example screws or nails, not shown) positioned in holes 19 fix the body 15 to the casing 2.

[0009] Each body 15 comprises a free face 20 opposing the face 16 and facing towards the interior of the compartment 1, and opposing sides 21 and 22 substantially perpendicular to said faces 16 and 20. Along the side 21 and at least within the face 20 (and possibly also within the face 16) a plurality of dead-ended recesses 25 are provided close together at different heights along the elongate body 15. The recesses 25 present an upper side 26 and a lower side 27 (with reference to the height direction of the compartment 1); the upper side 26 is preferably inclined to the side 27; this latter terminates with a free end 30 preferably raised towards the overlying side 26. This configuration of the sides 26 and 27 of each recess 25 allows this latter to easily receive by insertion a corresponding projecting part 11 of a shelf 12 and 13; as this projecting part is securely supported in the recess, it is very difficult for the projecting part to fortuitously escape from the recess. The projecting parts 11 of a shelf 12 or 13 must evidently penetrate into recesses 25 positioned at the same height on the various elements 10.

[0010] The side 21 of each support element 10 of each pair of said elements present on the walls 4 can face the end wall 5 of said compartment; this solution is shown by full lines in Figure 1. However the side 21 of each element 10 can alternatively face the open side of the compartment 4, while still enabling said pairs to adequately support the shelves 12 and 13 of the compartment (this solution is shown by dashed lines in Figure 1). The device of the invention is of simple construction, is easy to mount in the refrigerator preservation compartment, enables its side walls to be easily cleaned, and is simple to use by the user. Moreover the closeness of the recesses 25 in the support elements 10 means that the user is able to finely adjust the refrigerator shelves.

[0011] Variants are possible to the described embodiment, such as that in which the recesses 25 are through recesses and open at the face 8 and at the opposing sides 21 and 22, said recesses having a sunken portion for containing the projecting parts 11. The support elements can also be integrated into the compartment casing 2 and be formed by vacuum forming together with this latter. These variants are also to be considered as falling within the present invention.

Claims

1. A device for adjusting the height of shelves (12, 13) within a refrigerator preservation compartment (1), this latter comprising side walls (4) and an end wall (5), on said side walls (4) there being provided supports for supporting end projecting parts (11) of the shelves on which food to be preserved is placed, and enabling said shelves (12, 13) to be positioned at different heights within said compartment (1), **characterised in that** the supports are defined by pairs of support elements (10) having an elongate

body (15) presenting a plurality of recesses (25) opening into a side (21) of said body (15), said recesses (25) being arranged to contain the end projecting parts (11) of the shelves (12, 13).

2. A device as claimed in claim 1, **characterised in that** the recesses (25) are dead-ended.

3. A device as claimed in claim 2, **characterised in that** the recesses (25) also open into a face (20) opposite that face (16) of the support elements (10) which cooperates with a corresponding side wall (4) of the preservation compartment.

4. A device as claimed in claim 3, **characterised in that** the recesses (25) pass completely through the elongate body (15) of each support element (10).

5. A device as claimed in claim 1, **characterised in that** each recess (25) opens towards the rear wall (5) of the preservation compartment.

6. A device as claimed in claim 1, **characterised in that** each recess (25) opens towards an open side of the preservation compartment.

7. A device as claimed in claim 1, **characterised in that** each recess presents an upper side (26) and a lower side (27), the upper side (26) being inclined to the lower side (27).

8. A device as claimed in claim 1, **characterised in that** the lower side (27) of each recess (25) presents a free end (30) raised towards the overlying lower side (26).

9. A device as claimed in claim 1, **characterised in that** the elongate body (15) presents fixing members (17) for fixing it to the side wall (4) of the preservation compartment.

10. A device as claimed in claim 9, **characterised in that** each fixing member is a peg (17) projecting from that face (16) of said elongate body (15) which faces said side wall (4).

11. A device as claimed in claim 1, **characterised in that** the elongate body comprises through holes (19) for receiving members for fixing said body to the side wall (4) of the preservation compartment.

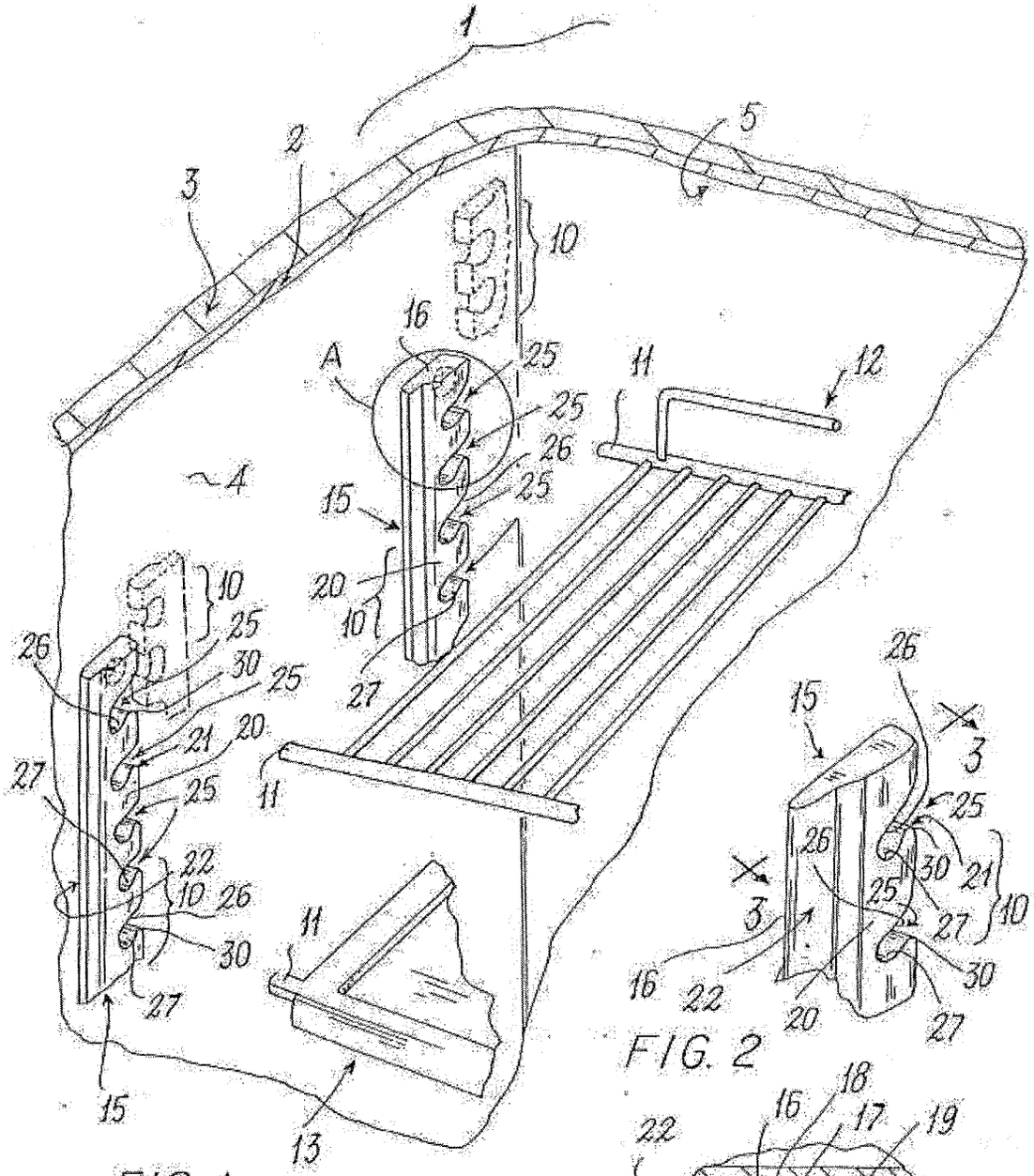

FIG. 1

FIG. 2

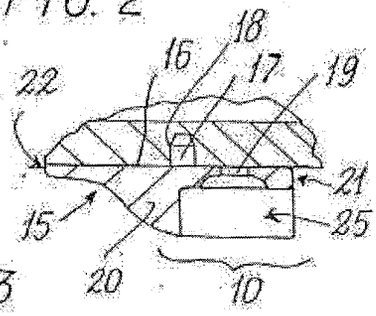

FIG. 3