March 2, 1948. G. A. KANE 2,437,161

HYDRAULIC HOIST SYSTEM

Filed March 21, 1940 3 Sheets-Sheet 1

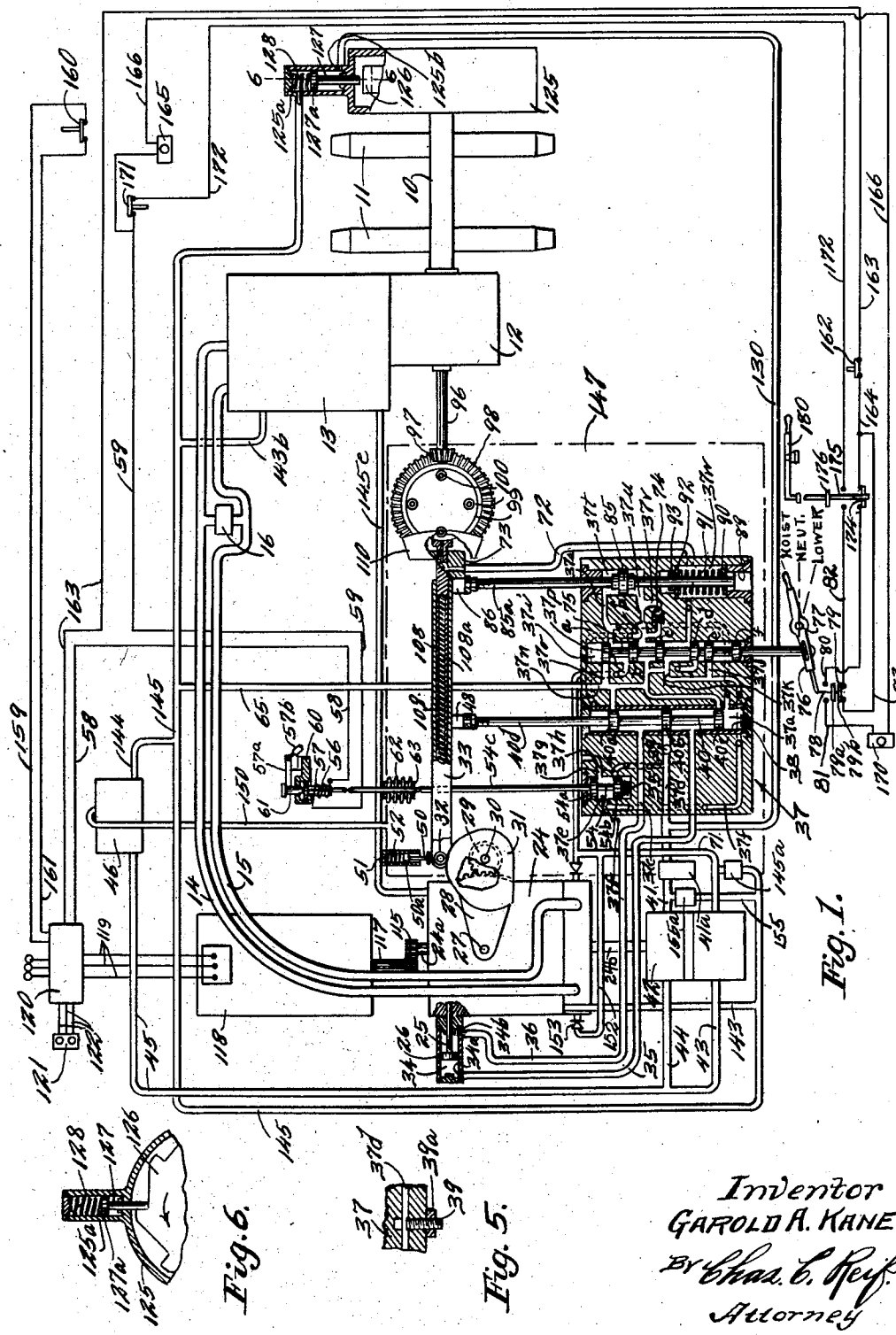

Fig. 1.

Fig. 6.

Fig. 5.

Inventor
GAROLD A. KANE
By Chas. C. Reif
Attorney

March 2, 1948. G. A. KANE 2,437,161

HYDRAULIC HOIST SYSTEM

Filed March 21, 1940 3 Sheets-Sheet 2

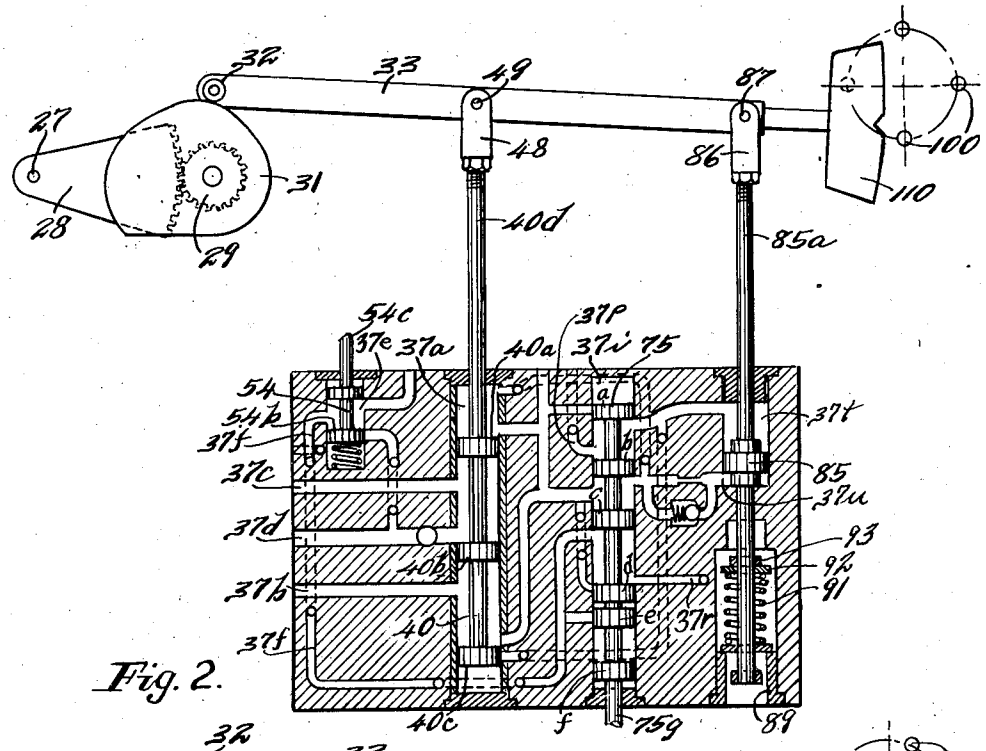

Fig. 2.

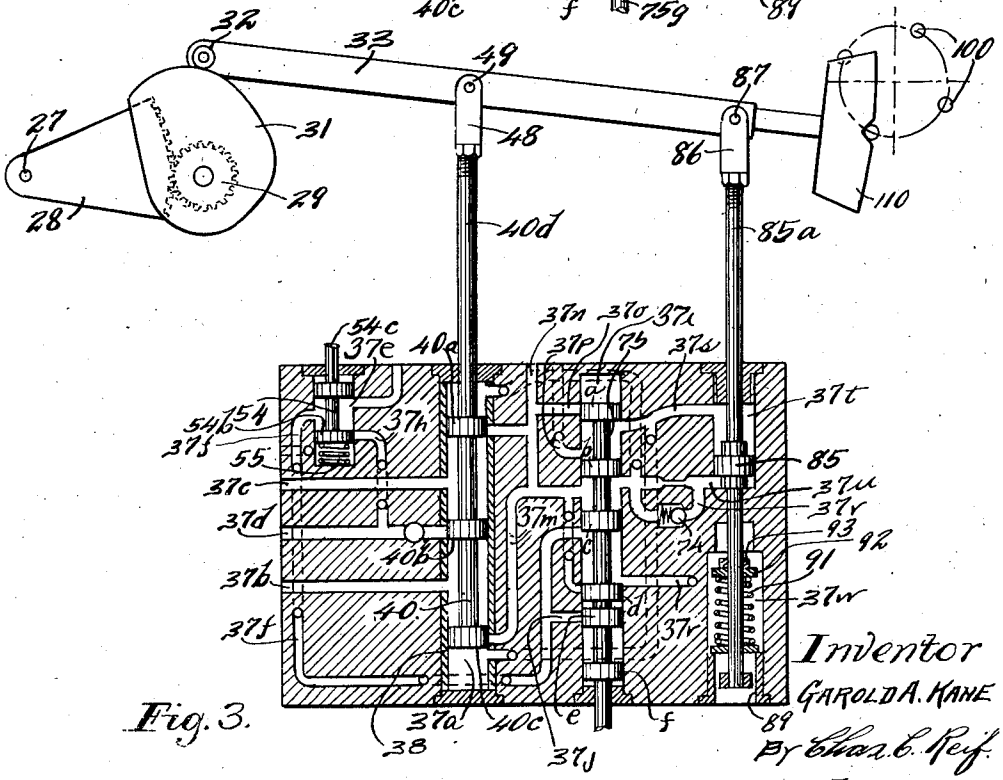

Fig. 3.

Inventor
GAROLD A. KANE
By Chas. B. Reif
Attorney

March 2, 1948. G. A. KANE 2,437,161

HYDRAULIC HOIST SYSTEM

Filed March 21, 1940 3 Sheets-Sheet 3

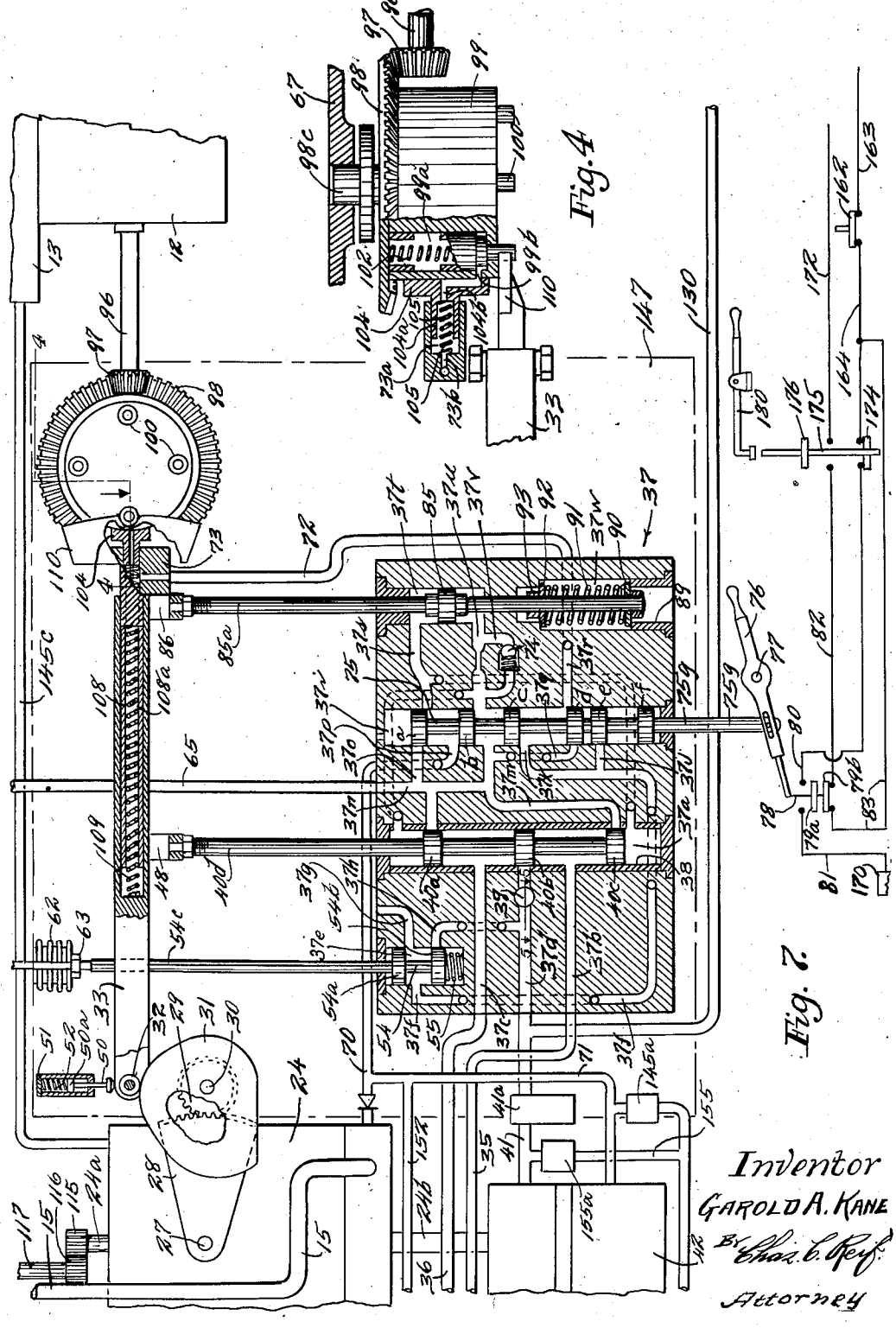

Fig. 4

Fig. 7

Inventor
GAROLD A. KANE
By Chas. L. Popp
Attorney

Patented Mar. 2, 1948 2,437,161

UNITED STATES PATENT OFFICE

2,437,161

HYDRAULIC HOIST SYSTEM

Garold A. Kane, Minneapolis, Minn., assignor to The Northern Pump Company, Minneapolis, Minn., a corporation of Minnesota

Application March 21, 1940, Serial No. 325,210

14 Claims. (Cl. 60—53)

1

This invention relates to a hoist and a control mechanism therefor and especially to a hoist which is hydraulically operated. While said hoist may have various applications, one particular application thereof is for an ammunition hoist. With such a hoist used for carrying ammunition, such as shells, on a warship, it is desirable that the same operate quite rapidly. It is also desirable that in a flight or one movement of said hoist the same be accelerated rapidly to full speed and that it be decelerated gradually and brought to zero acceleration and velocity at the end of the flight. This is necessary in order to prevent movement of the shells on said hoist due to inertia of the shells in raising or lowering the same, which movement is commonly referred to as "shucking." The ideal curve of deceleration of said hoist would probably be a straight line. It is difficult to have the deceleration curve follow accurately a straight line, although in the present invention the deceleration curve is substantially a straight line.

It is an object of this invention to provide a control mechanism for a hoist by means of which said hoist may be operated in distinct movements or flights, the movement of said hoist being accelerated or decelerated according to a fixed predetermined law.

It is another object of the invention to provide a hydraulic hoist system comprising a hoist driven by a hydraulic power unit which is in turn driven by a variable stroke pump, together with means for varying the stroke of said pump to give a predetermined acceleration and deceleration to said hoist so that there is a definite fixed relation between the control means for varying the stroke of said pump and the deceleration of said hoist.

It is also an object of the invention to provide a hydraulic hoist system comprising a hoist, a hydraulic power unit connected thereto for moving the same, a variable stroke pump, means for varying the stroke of said pump to positively control the rate of movement of said hoist, a control means for said last mentioned means, means moved by the change of stroke of said pump for operating said control means and a flight control mechanism driven in direct ratio to the movement of said hoist for operating said control means.

It is a further object of the invention to provide a control mechanism for a hoist comprising a motor-driven variable stroke pump operating a hydraulic motor connected to said hoist, which control mechanism may be automatically operated to move, accelerate and decelerate said hoist as desired.

2

It is a further object of the invention to provide a control mechanism as above set forth comprising a flight control mechanism directly connected to the hoist driving mechanism and cooperating with the means for varying the stroke of said pump.

Another object of the invention is to provide a hydraulic control and driving mechanism for a hoist comprising a driven variable stroke pump, said stroke being varied by hydraulic means to accelerate or decelerate the movement of said hoist, said variation of stroke also acting to operate a cam for positively determining the rate of acceleration and deceleration.

It is further an object to provide a hoist and a motor-driven hydraulic control and driving means therefor, said control means including manually operated means for setting the hoist to be raised or lowered or to be set in neutral position, together with certain operating control electrical circuits having switches therein closed by said manually operated means and by the placing of the ammunition in the hoist compartments.

These and other objects and advantages of the invention will be fully set forth in the following description made in connection with the accompanying drawings in which like reference characters refer to similar parts throughout the several views and in which:

Fig. 1 is a diagrammatic view illustrating the hoist hydraulic control and driving means together with the flight control mechanism and the various electrical and hydraulic control mechanisms;

Fig. 2 is a view of a portion of the control mechanism shown in a different position than in Fig. 1, the same being shown in positions for the start of the hoisting cycle;

Fig. 3 is a view similar to Fig. 2 showing the parts in position for the deceleration period of the hoisting cycle;

Fig. 4 is a view partly in plan and partly in vertical section taken substantially on line 4—4 of Fig. 7 as indicated by the arrow;

Fig. 5 is a horizontal section taken on line 5—5 of Fig. 7 as indicated by the arrow;

Fig. 6 is a vertical section on line 6—6 of Fig. 1 and

Fig. 7 is a partial view similar to Fig. 1 shown on an enlarged scale.

Referring to the drawings, a shaft 10 is shown upon which are secured spaced sprockets 11 which

will constitute the driving sprockets for the hoist. The hoist (not shown) comprises an endless conveyer moving in a housing and driven by sprockets 11 having spaced supports thereon for receiving the shells or other ammunition, said housing having upper and lower doors. Switches are provided at these doors which will be later described. Shaft 10 is driven through a speed reducing mechanism 12. While this speed reducing mechanism may be of various types, one common type is that of a worm and worm wheel. The speed reducing mechanism is driven from a hydraulic motor 13 which may be of standard type or form. Such motors are well known in the art. Hydraulic motor 13 is supplied with operating fluid by conduits 14 or 15. Conduits 14 and 15 form the inlet and outlet conduits of a variable stroke pump 24. While various types of variable stroke pumps might be used, one type which has been found suitable is that similar to the pump disclosed in U. S. Letters Patent No. 1,062,071, granted May 20, 1913, to H. D. Williams et al. on "Speed adjusting means for rotary hydraulic devices."

A duplex relief valve 16 is disposed between conduits 14 and 15. Pump 24 as stated is of the variable stroke type and the stroke is varied by movement of rod 25 controlled by a piston 26 which may be referred to as the servo-piston. Changing the stroke of pump 24 rotates a trunnion shaft 27 to which is secured a gear segment 28 meshing with a gear 29 carried on a shaft 30. A control cam 31 is secured to shaft 30 and engaged by a cam roller 32 secured adjacent one end of a link or lever 33. Piston 26 is movable in a cylinder 34 having ports 34*a* and 34*b* adjacent its ends with which ports communicate conduits 35 and 36. Conduits 35 and 36 are connected to a control unit comprising a member 37. Member 37 has therein a valve chamber 37*a* illustrated as of cylindrical form and contained within a bushing or lining 38. A valve 40 is movable in valve chamber 37*a* and has spaced portions or lands 40*a*, 40*b* and 40*c*. Ports or passages 37*b* and 37*c* lead from valve chamber 37*a* to and communicate with conduits 35 and 36 respectively. Another passage 37*d* extends from valve chamber 37*a* to and communicates with a conduit 41 forming the outlet or discharge passage from an auxiliary or pressure maintaining pump 42, often called a make-up pump. Pump 42 is driven from pump 24 by a shaft 24*b*. Pump 42 is really a double or duplex pump having inlet conduits 43 and 44 communicating with a conduit 45 leading to oil reservoir 46. A filter 41*a* is shown in conduit 41. Passage 37*d* may be varied in size or cross sectional area by a plug 39 threaded into member 37, the same being shown as having a slotted head and being equipped with a jamb nut 39*a* (see Fig. 5). Valve 40 comprises a valve rod 40*d* which is connected to lever 33. A fork member 48 connected to rod 40*d* has portions disposed at either side of lever 33 and connected thereto by suitable studs 49. Rod 40*d* is thus pivoted to lever 33. It may be stated that a headed plunger 50 bears on lever 33 adjacent roller 32. Plunger 50 has a piston head 50*a* movable in a cylinder 51 and engaging a coil compression spring 52, the other end of which engages cylinder 51. Plunger 50 thus acts to hold the end of lever 33 in position with cam roll 32 pressed against cam 31. Member 37 has therein a bore 37*e* forming a valve chamber in which is movable a valve 54 having spaced cylindrical portions or lands 54*a* and 54*b*. Valve 54*a* controls the passage of liquid from a passage 37*f* to spaced passages 37*g* and 37*h*. Passage 37*g* leads to the outer side of member 37 while passage 37*h* leads to and communicates with passage 37*d*. Valve 54 is engaged at its lower end by a coiled compression spring 55 which normally tends to raise said valve and said valve comprises a valve rod or stem 54*c* connected at its upper end to a solenoid core 56. Core 56 is disposed in a solenoid or magnet coil 57, the ends of which are connected respectively to conductors 58 and 59. Core 56 has a cylindrical head movable in a cylindrical chamber in a casing 60. A plunger 61 extends through a bore in casing 60 into said chamber and into engagement with the head of core 56. Plunger 61 is adapted to be depressed manually at certain times as will be later described. Said plunger 61 is held in the position shown by a bar 57*a* which is secured by a padlock 57*b*. A bellows 62 is engaged by an intermediate portion of rod 54*c*, a nut 63 being secured to rod 54*c* for this purpose.

Member 37 has therein a valve chamber 37*i*. Chamber 37*i* is connected to passage 37*f* by the spaced ports 37*j* and 37*k*. A passage 37*m* communicates with valve chamber 37*a* adjacent the lower end of said chamber and extends to and communicates with valve chamber 37*i* some distance above port 37*k*. Passage 37*m* has a passage 37*n* extending upwardly therefrom, the same having a port 37*o* communicating with valve chamber 37*i* adjacent the top of the latter. A drain or vent conduit 65 extends from passage 37*n* to a similar conduit 145 later described. A passage 37*p* has a port opening into valve chamber 37*i* substantially midway between ports or passages 37*m* and 37*o*, the same extending to the top of member 37 and communicating with a conduit 70 which is connected to the discharge chamber of pump 24. Another conduit 71 extends from conduit 70 the discharge chamber of pump 42. A vent or relief passage 37*q* extends from passage 37*m* adjacent valve chamber 37*i* and communicates with valve chamber 37*i* some distance below the point where passage 37*k* communicates with said valve chamber. A passage 37*r* communicates with valve chamber 37*i* somewhat adjacent the lower end thereof, said passage extending to and communicating with a conduit 72 which extends to a member 73 forming part of the flight control mechanism which will be later described. A passage 37*s* leads from valve chamber 37*i* to adjacent the top of another valve chamber 37*t* formed in member 37. Another passage 37*u* leads from valve chamber 37*i* some distance below passage 37*s* and communicates with valve chamber 37*t* adjacent the bottom thereof. Passage 37*u* has a constricted portion therein between valve chambers 37*i* and 37*t*. A by-passage 37*v* connects with passage 37*u* and extends about said constricted portion, said passage 37*v* having a check valve 74 therein. A valve 75 is disposed in valve chamber 37*i*, the same having a plurality of spaced portions or lands *a*, *b*, *c*, *d*, *e* and *f* fitting in valve chamber 37*i*. Said valve has a valve rod or stem 75*g* which extends below member 37 and is connected adjacent the end of a hand lever 76 pivoted on a stud 77. Valve 75 may be called the selecter valve and lever 76 the selecter lever. Lever 76 is movable to three positions as indicated in Fig. 1, namely, the hoist or lifting, neutral and lower or lowering positions. Lever 76 is shown as having an extension at its end connected by a link 78 to a double

switch 79 having a contact 79a movable to connect or disconnect conductors 80 and 81 and a contact 79b adapted to connect or disconnect conductors 82 and 83. Switch 79 may be called the selector switch. A piston 85 illustrated as having a single cylindrical portion or land is disposed in valve chamber 37t, the same having a rod or stem 85a, the upper portion of which projects above member 37 and is secured to a fork member 86 having arms extending at either side of member 33 and pivoted thereto by studs 87. Member 33 is thus connected at spaced points to valve 40 and piston 85. The lower portion of rod 85a extends into a cylindrical chamber 37w formed in member 37 axially alined with valve chamber 37t. A bushing 89 is disposed in the lower end of chamber 37w, the inner end of which is engaged by a washer 90 surrounding rod 85a and engaged by the lower end of a compression coiled spring 91, the upper end of which engages a washer 92 which seats against the shoulder formed by a reduced portion of chamber 37w. A nut or collar 93 of a size to move into said reduced portion is secured to rod 85a and engages the top of washer 92.

A shaft 96 is connected to the speed reducing mechanism 12 and rotates in fixed ratio with shaft 10. Shaft 96 has secured thereto a beveled pinion 97 meshing with a beveled gear 98 which has secured thereto a drum or block 99 from the end of which opposite gear 98 projects a plurality of pins 100. Pins 100 are shown as four in number and spaced equally circumferentially about the end of drum 99. Gear 98 is secured to a shaft 98c journaled in a casing 67. Drum 99 has formed therein chambers 99a extending parallel to the axis thereof. Each pin 100 has a head disposed in one end of one chamber 99a, said pin being slidable in a bore extending from said chamber to the outer end of said drum. A coiled compression spring 102 bears against one end of said chamber, the other end of which bears against the head of pin 100. Pins 100 are thus normally moved to their outer positions shown in Fig. 4 by springs 102. Each chamber 99a has a port or passage 99b leading from adjacent the outer end of chamber 99a to the periphery of drum 99. A member 104 engages the side of drum 99 fitting tightly thereagainst, the same having a reduced cylindrical portion 104a extending into a bore 73a formed in member 73. A compression coiled spring 105 has one end engaging the end of bore 73a and its other end being disposed in a bore in portion 104a. Spring 105 thus acts to hold member 104 against drum 99. Member 104 has a passage 104b therein leading into chamber 73a and member 73 has therein a passage 73b leading into chamber 73a, which passage 73b communicates with conduit 72. Member 33 previously referred to is bored to receive a member 108 which is slidable therein, member 108 having a bore 108a therein. A coiled compression spring 109 is disposed in bore 108a having one end bearing against the end of said bore and the other end bearing against the bore in member 33 so that said spring normally forces member 108 outwardly from member 33. Member 108 has formed thereon or secured thereto at its outer end a detent portion or member 110. As shown in Fig. 1 member 110 extends vertically some distance above and below member 33 and its carrying member 108 and the same has a convexly curved outer surface. Member 110 has a groove formed therein midway of its outer surface in which one of the pins 100 is adapted to seat in the operation of the device.

Pump 24 has a driving shaft 24a to which is secured a gear 115 meshing with a gear 116 secured to the driving shaft 117 of an electric motor 118. The usual conductors 119 are shown extending to motor 118, which extend to a controller 120 which may be of any well known type. A starting switch 121 of the button type is also shown connected to controller 120 by conductors 122.

Shaft 10 of the hoist extends into a casing 125 and has secured thereto a ratchet wheel 126. A plunger 127 is slidable through the top of casing 125 and acts as a pawl or stop detent to engage ratchet wheel 126. Plunger 127 has a head 127a forming a piston slidable in a cylindrical casing 125a extending upwardly from the top of casing 125. A coiled compression spring 128 is disposed above plunger head 127a and engages the top thereof, the other end of said spring engaging the top of casing 125a. Casing 125a has a port or opening 125b in the side thereof with which communicates a conduit 130 which is connected to conduit 41 leading from make-up pump 42. It will be seen that when pump 42 is operating pressure will be maintained in casing 125a beneath piston 127a so that plunger 127 will be maintained out of contact with ratchet 126. Should there be no pressure in casing 125a spring 128 will force plunger 127 into position to engage against ratchet wheel 126. This will prevent rotation of shaft 10 in the direction opposite to the arrow shown in Fig. 6 and will prevent lowering of the hoist.

A conduit 145 is connected to conduit 71, said conduit being connected by conduit 144 to oil reservoir 46 and by conduit 143 to pump 24. A relief valve 145a is shown in conduit 145 and in one embodiment of the invention in practice this has been set to open at fifty pounds pressure. A conduit 155 also connects conduit 145 to conduit 41. A relief valve 155a is disposed in conduit 155. In one embodiment of the invention in practice this valve has been set to open at 250 pounds pressure. Conduit 145 also extends to casing 125a. Conduit 145 and the conduits attached thereto act as relief or equalizing conduits conveying the oil to reservoir 46. The valve casing 37 and adjacent parts will be contained in a casing indicated as 147 which preferably will contain oil. An equalizing conduit 150 extends from the top of oil reservoir 46 to the top of casing 147. A conduit 152 extends from one side of the casing of pump 24 adjacent the bottom thereof to conduit 71. A check valve 153 is disposed in conduit 152 adjacent pump 24. A conduit 145c extends from the lower portion of unit 13 to the top of pump 24.

As previously stated there is an upper door switch on the hoist and this is shown in Fig. 1 as switch 160. Said switch is shown as adapted to connect a conductor 161 and a conductor 159, which conductors extend to motor controller 120. The lower door switch of the hoist is shown in Fig. 1 as 162. Switch 162 is adapted to connect a conductor 164 and a conductor 163 which extends to motor controller 120. A pair of push button switches are provided, one of which, 165, called the upper push button, is adapted to connect a conductor 166 to conductor 59. Conductor 166 extends to the other push button switch 170 and is adapted to be connected thereby to conductor 81. A cam switch 171 is shown in Fig. 1 adapted to connect conductor 59 to a conductor

172. Conductors 164 and 80 are adapted to be connected by a switch 174 connected to a rod 175 which also carries a switch 176 adapted to connect conductors 82 and 172. Switch 174 may be referred to as the lower cam switch. A hand lever 180 has a portion adapted to be moved to engage rod 175 so as to operate switches 174 and 176. It will be noted that upon downward movement of rod 175 as shown in Fig. 1 switch 176 will be moved to closed position while switch 174 will be moved to open position.

As stated the hoist comprises an endless conveyer which is moved in a series of comparatively short movements or flights. With the embodiment of the invention illustrated the mechanism was designed in one specific case for flights from 49 inches to approximately 56 inches. It is desirable and, in fact, almost necessary that the hoist start from rest at the beginning of the flight, be accelerated quickly to maximum velocity and then be decelerated at a predetermined rate to come to rest at the end of the flight.

Referring to the control of the variable stroke main pump 24 by the servo-piston 26 it will be seen that the servo-valve 40 is in neutral position. If this valve is forced downwardly from neutral, liquid or specifically oil which is commonly used, will flow under pressure from auxiliary pump 42 through conduit 41 and passage 37*d* past the upper end of land 40*b* and into the chamber between this land and land 40*a* out through passage 37*c* and through conduit 36 to the right hand end of servo-piston 26 as seen in Fig. 1. This will force piston 26 to the left, thus moving rod 25 to the left. This acts to increase the stroke of pump 24. Oil from the left hand end of piston 26 is forced through conduit 35 and passage 37*b* into the lower end of valve chamber 37*a* between portions 40*b* and 40*c* of valve 40, thence through passage 37*m* and through conduit 65 into the oil reservoir. By movement of rod 25 the trunnion shaft 27 is oscillated and gear segment 28 is moved thereto to rotate gear 29. This rotates control cam 31, which acting upon roller 32 raises the left hand end of link 33. This lifting of link 33 lifts valve rod 40*d* and moves servo-valve 40 back toward its neutral position. As soon as this neutral position is reached oil flow to the servo-piston 26 through the servo-valve 40 is stopped and a new position of equilibrium is established with pump 24 held on partial stroke, the magnitude of this stroke being determined by the amount of downward motion of the right hand end of member 33 and the shape of cam 31. The actual operation of the pump, member 33 and cam 31 is continuous rather than cyclic or discontinuous as above described. In other words as the right hand end of the linkage or member 33 is being forced downwardly the stroke of pump 24 is simultaneously changed according to the action of the servo-valve and servo-piston in connection with the coacting cam 31 and said linkage.

Similarly, if the member 33 is moved upward from the zero position indicated in Fig. 1 the stroke of pump 24 is simultaneously changed in a direction opposite to that previously described. That is, upon an upward movement of operating valve rod 40*d*, valve 40 will be moved above its neutral position allowing oil to flow from conduit 41 through passage 37*d* into the chamber between the portions or lands 40*b* and 40*c* of servo-valve 40 and oil will then flow through passage 37*b* and conduit 35 into casing 34 at the left hand end of piston 26 and said piston

and rod 25 will be moved to the right as shown in Fig. 1, thus again changing the stroke oppositely to that previously described. Cam 31 will be moved in the opposite direction and link 33 will be moved to bring valve 44 toward neutral position. It will be seen that pump 24 supplies oil through conduit 15 to hydraulic motor 13. Oil will pass from the motor through conduit 14 back to pump 24. The flight control mechanism including member 33 and the solenoid valve 54 control the position of the right hand end of link or lever 33 automatically in response to the electrical circuits provided.

Fig. 1 as above stated shows the unit in neutral position and with the selector valve set for the hoisting position or upward movement of the hoist. At this time the upper hoist door is open which closes the upper door switch 160. With the unit in neutral position the electric motor 118 is in operation and pump 24 is being driven on neutral stroke. Auxiliary or make-up pump 42 is also driven through shaft 117 for maintaining the desired pressures. It will be seen that pressure is delivered to casing 125*a* below plunger 127*a* through conduit 130 so that the detent plunger 127 is held out of engagement with ratchet 126. With no shell in the upper chamber of the hoist the upper cam switch 171 is closed and with no shell in the lower chamber of the hoist switch 176 is open and switch 174 is closed. Under these conditions solenoid 57 is not energized and the solenoid valve 54 is in the position shown in Fig. 1. It will be seen that one terminal of solenoid 57 is connected directly to the power line at controller 120 through conductor 58. The circuit of solenoid 57 is open at the opposite side of the solenoid. The circuit of the solenoid may be traced through conductor 59, closed switch 171, conductor 172 to the open switch 176 or through conductor 59 as before, through the upper push button switch 165 which is normally open, through conductor 166 to the lower push button 170 which is normally open and to open switch 79*a*. If a shell is now placed in the lower opening and the lower doors closed, switch 176 will close connecting conductors 82 and 172 and the circuit of solenoid 57 is then closed, through conductor 82, switch 79*b*, conductor 83, conductor 164, the lower door switch 162, now closed, and through conductor 163. With switch 79*b* thus closed by the selector lever being set for the hoisting position shown, oil under pressure in line 71 now flows through the chamber of the selecting valve, between the portions *a* and *b* of valve 75, through passage 37*s* into the upper part of valve chamber 37*t* and this pressure tends to force piston 85 downward. The lower portion of chamber 37*t* is connected through the parallel paths 37*u* and 37*v* and check valve 74 to the chamber in valve chamber 37*i* between portions *b* and *c* of valve 75 and then to conduit 65 through passage 37*n* to the oil reservoir. Piston 85, however, is prevented from moving downward by the pressure thereon due to the fact that the linkage detent member 110 is engaged by one of the pins 100 on the flight control drum 99. This pin as shown in Figs. 1 and 4 is seated in the groove in the curved face of member 110. It will be seen that this pin 100 is positioned through gear 98, pinion 97 and shaft 96 from the hoist sprocket shaft 10. However, as soon as a shell is placed in the lower chamber of the hoist and the lower doors closed, solenoid 57 is energized through the circuit just above traced and the solenoid acts to move valve

rod 54c downwardly, thus moving solenoid valve 54 downwardly. When this occurs, oil under pressure flows from conduit 41 through passage 37d and through passage 37h into valve chamber 37e and into passage 37f, through the selector valve chamber 37i between portions c and d of valve 75, thence into passage 37r and into conduit 72. The liquid flowing into conduit 72 enters passage 73a and acts on the differential piston area of the piston head of pin 100, forcing this pin back into the drum 99 against the pressure of spring 102, thus disengaging said pin from the linkage detent member 110. When said pin 100 is thus withdrawn from member 110 the pressure on piston 85 immediately moves said piston downwardly so that the parts are then in the position shown in Fig. 2. The rod 40d of servo-valve 40 is thus moved downward by member 33 and oil is allowed to flow from conduit 41 into passage 37c between the upper two lands of servo-valve 40, which oil flows through conduit 36 to the right hand side of servo-piston 26 and this piston is moved and moves rod 25, thus rapidly changing the stroke of pump 24 from zero to full stroke and the cam 31 is rotated clockwise as shown in Fig. 1 approximately 90 degrees. The speed of the stroking piston 26, the speed at which the stroke is changed and hence the acceleration rate of the hoist may be controlled by the adjustable orifice 37d, which is regulated by the plug or screw 39 shown in Fig. 5. When servo-piston 26 is moved and the stroke of main pump 24 changed from neutral in the hoisting operation, oil is delivered through conduits 14 or 15 to the hydraulic motor 13 and the shaft 10 and hoist sprockets 11 are driven, thus causing movement of the hoist for a flight. Inasmuch as the speed of the servo-piston during the stroke-changing interval is approximately constant, the acceleration of the hoist is very nearly constant and full speed operation in raising the hoist is rapidly attained.

During the hoisting operation shaft 96 is driven and the flight control mechanism is driven through gears 97 and 98. Rotation of gear 98 rotates drum or plug 99 and one of the pins 100 comes into engagement with the linkage detent member 110. Said member 110 is raised as will be apparent from Figs. 3, 2 and 1 so that the right hand end of member 33 is raised and the valve rod 40d of the servo-valve is raised and held slightly above neutral so that oil from pipe 41 now passes through passage 37d into valve chamber 37a between portions 40b and 40c of valve 40 and thence through passage 37b and conduit 35 to the left hand end of servo-piston 26. Piston 26 is thus moved back toward its zero or neutral position and the stroke of pump 24 is changed and the hoist decelerated. Since the stroke of the main pump 24 determines the speed of the hoist shaft 10, for any given position of the hoist during the deceleration cycle, there is a definite, accurately controlled speed of operation, which speed is reduced as the hoist approaches a flight level. When the flight level is reached, pin 100 has rotated exactly 90 degrees clockwise from its initial position when the hoisting operation began which will be clearly seen in Fig. 1. At the end of said 90 degrees the servo-valve and piston are again in neutral position and the hoist is maintained stationary on a flight level providing the solenoid valve is not re-energized. It will thus be seen that the deceleration has been accurately controlled by cam 31 and the flight control mechanism. The deceleration and velocity are brought to zero point as the hoist finishes its flight. The deceleration curve is substantially a straight line. The deceleration can thus be predetermined.

If, however, another shell is placed in the lower chamber of the hoist and the shell removed from the upper chamber before the hoist comes to a complete stop at the flight level, the solenoid 57 and the solenoid valve 54 are again actuated and the pin 100 engaging member 110 will be withdrawn from the linkage detent and a new hoisting cycle will be initiated immediately.

The operation of the servo-valve 40 and servo-piston 26, the operation of the linkage detent and flight control mechanism including member 33, drum 99 and attached parts is essentially the same in the lowering operation of the hoist as in the hoisting or lifting operation. With the selector lever 76 set for the lowering position oil under pressure from conduit 71 flows through conduit 70 and through passage 37p, through valve chamber 37i, between portions b and c of selector valve 75, through passage 37u having the restriction therein and into valve chamber 37t below piston 85. This oil under pressure tends to force piston 85 upwardly but this motion is again prevented by one of the pins 100 being engaged in linkage detent member 110. However, regardless of the position of the upper cam switch 171 the solenoid 57 can be energized by simultaneous operation of the upper and lower push buttons 165 and 170 if the lower hoist door is closed and there is no shell in the lower chamber holding switch 174 open. As soon as the solenoid 57 is energized the detent pin 100 is withdrawn by oil pressure through conduit 72 acting thereon as above described and the pressure on piston 85 forces the same upward. This raises the right hand end of member 33 but at a reduced rate depending upon the restriction in passage 37u. Valve rod 40d is thus raised and valve 40 is moved to a position above its neutral position and oil under pressure from conduit 41 flows into valve chamber 37a between valve portions 40b and 40c, then out through passage 37b into conduit 35 and into cylinder 34 at the left hand end of servo-piston 26. The piston is thus moved to the right as shown in Fig. 1 and the main pump 24 will have its stroke changed and oil will be delivered through conduits 14 and 15 to drive motor 13 in the direction to lower the hoist. The movement of piston 26 is at a reduced rate dependent, of course, upon the speed of the upward movement of the right hand end of member 33. The reduced rate of speed of piston 26 and acceleration of the hoist on lowering is to prevent "shucking" of the shells. The hoist is self-leveling on the lowering cycle just as has been previously described for the upward or hoisting cycle. If the upper and lower push buttons 165 and 170 are held closed the hoist will continue to lower until a shell arrives at the lower chamber and operates the lower cam switch 174, thus opening the circuit of solenoid 57. This prevents initiation of another lowering cycle. The hoist can be controlled by hand lever 180 which operates switches 174 and 176. These switches occupy function in the circuits as do switches 79a and 79b respectively.

The hand lever 180 is used to operate switches 174 and 176. When it is desired to clear the hoist or in other words to keep it running until all the shells or other articles are removed therefrom, the operator presses down on the rod carrying switches 174 and 176, thus closing switch 176 and opening switch 174. This will cause repeated

operations of the hoist. The action is the same as placing a shell on the hoist.

From the above description it will be seen that I have provided a very efficient and very accurately controlled hydraulic hoist system. The hoist is brought from rest very quickly to maximum velocity in a flight and is decelerated under positive control. The deceleration will be according to a predetermined rate regardless of the viscosity of the oil or control fluid. The coaction between control cam 31 and the flight control mechanism which is connected to member 33 insures that the deceleration will be accurately controlled and that there will be a fixed predetermined relation between the position of the hoist and the deceleration so that the hoist comes to rest accurately at the end of the flight and in the desired position as the deceleration reaches zero.

It will be obvious that the invention has a high degree of utility for the purpose intended and the same is being manufactured for actual use.

It will, of course, be understood that various changes may be made in the form, details, arrangement and proportions of the parts, without departing from the scope of applicant's invention, which generally stated, consists in a device capable of carrying out the objects above set forth, in the parts and combinations of parts disclosed and defined in the appended claims.

What is claimed is:

1. A hydraulic system for operating a hoist having in combination, a hydraulic power unit for moving said hoist, a variable stroke pump for driving said unit, means for varying the stroke of said pump to control the rate of movement of said hoist, a control means for said last mentioned means including a valve, a cam moved in accordance with the change of stroke of said pump, a flight control mechanism driven from said hoist including a revoluble member having circumferentially spaced means thereon, a lever moved by said cam and having a portion extending to adjacent said revoluble member and adapted to be engaged by one of said spaced means for moving said valve and controlling the deceleration of said hoist, said lever being connected to said valve intermediate said cam and said revoluble member.

2. A hydraulic system for operating a hoist having in combination, a hydraulic power unit connected to said hoist for moving the same, a variable stroke pump for driving said unit, means for changing the stroke of said pump for controlling the rate of movement of said hoist, a hydraulic valve for controlling said means, mechanism moved in accordance with the change of stroke of said pump connected to said valve and a flight control means driven directly from said hoist also connected to said mechanism for moving said valve, said flight control means including a rotatable member, a plurality of circumferentially spaced members carried by said member adapted to respectively engage said mechanism and hydraulic means for moving said last mentioned members to inoperative positions.

3. A hydraulic system for operating a hoist having in combination, a hoist, a hydraulic power unit connected to the hoist for operating the same, a variable stroke pump for supplying liquid under pressure to said unit, a hydraulic means for changing the stroke of said pump, a valve for controlling the supply of liquid to said hydraulic means and a cam operatively connected to the stroke changing mechanism of said pump and moving in accordance with the change of stroke of said pump for controlling the position of said valve.

4. A hydraulic system for operating a hoist having in combination, a hoist, a hydraulic power unit connected to said hoist for moving the same, a variable stroke pump for driving said unit, means for changing the stroke of said pump to control the rate of movement of said hoist, a hydraulic valve for controlling said means, a cam moved in accordance with the change of stroke of said pump, a flight control mechanism driven from said unit and a differential mechanism connected to said valve and simultaneously acted upon by said cam and flight control mechanism for positioning said valve to determine the deceleration of said hoist.

5. A hydraulic system for operating a hoist having in combination, a hydraulic power unit for moving said hoist, a variable stroke pump for driving said unit, hydraulic means for changing the stroke of said pump, a valve for controlling said hydraulic means and means moved by and in non-linear relation to the change of stroke of said pump for controlling the movement of said hoist and means moved in direct relation to the movement of said hoist for controlling the movement of said valve to control the deceleration of said hoist, said last two mentioned means being connected for simultaneous coaction.

6. A hydraulic system for operating a hoist having in combination, a hydraulic power unit connected to said hoist for moving the same, a variable stroke pump for driving said unit, a hydraulic means without said pump for changing the stroke of said pump to control the acceleration of said hoist, a cam moved in accordance with the change of stroke of said pump, a lever mechanism acted upon by said cam, a control means for said means positioned by said lever mechanism, a flight control mechanism driven from said unit and acting upon said lever mechanism to control the deceleration of said hoist, said control means being normally held by said flight control mechanism in position to hold said pump in substantially neutral stroke with said hoist stationary and manually controlled hydraulically operated means for releasing said control means from said flight control mechanism to permit movement of said first mentioned means and said hoist.

7. A hydraulic system for operating a hoist having in combination, a hydraulic power unit connected to said hoist for moving the same, a variable stroke pump for driving said unit, means for changing the stroke of said pump for controlling the rate of movement of said hoist, means moved by the change of stroke in said pump including a cam, a valve for controlling said first mentioned means, a flight control mechanism driven in direct ratio to the movement of said hoist, a member carrying a roller engaging said cam and connected to said valve, said member having a portion disposed adjacent said flight control mechanism to be engaged and moved thereby after said hoist is in motion to control said valve and to effect deceleration of said hoist.

8. A hydraulic system for operating a hoist having in combination, a hydraulic power unit connected to said hoist for moving the same, a variable stroke pump for driving said unit, means for changing the stroke of said pump for controlling the movement of said hoist, means moved in direct relation to the change in the

stroke of said pump including a cam, a valve for controlling said first mentioned means, a lever operated at one end by said cam, a flight control mechanism having means engaging and moving the other end of said lever during the latter part of movement of said hoist to control the deceleration of said hoist, said lever being connected to said valve between said last mentioned means and said cam.

9. A hydraulic system for operating a hoist having in combination, a hydraulic power unit for moving said hoist, a variable stroke pump for driving said unit, means for changing the stroke of said pump for controlling the rate of movement of said hoist, a cam moved in accordance with the change in stroke of said pump for controlling the acceleration of said hoist and means driven in direct ratio with said unit and coacting with said cam after said hoist is in motion for controlling the deceleration of said hoist.

10. A hydraulic system for operating a hoist having in combination, a hydraulic power unit for moving said hoist, a variable stroke pump for driving said unit, a member movable to change the stroke of said pump, a control means for said member including a valve, a cam actuated by the movement of said member, a lever acted on by said cam, said valve being connected to the intermediate point on said lever, a second member driven from said unit constructed and arranged to engage the other end of said lever after said hoist is in motion for controlling the deceleration of said hoist.

11. The structure set forth in claim 10 and a manually controlled hydraulically operated piston connected to said lever for initiating the movement of said valve and member.

12. A hydraulic system for operating a hoist having in combination, a hydraulic power unit for moving said hoist, a variable stroke pump for driving said unit, a member movable to change the stroke of said pump, a control means for said member, a lever connected intermediate its ends to said control means, a connection between one

end of said lever and said member producing a non-linear movement of said lever, a second member constantly driven in direct ratio to said hoist for engaging the other end of said lever for controlling the deceleration of said hoist.

13. The structure set forth in claim 12 and a manually controlled means connected to said lever for moving said control means for initiating movement thereof and of said first mentioned member.

14. A hydraulic system for operating a hoist having in combination, a hydraulic power unit for moving said hoist, a variable stroke pump for driving said unit, hydraulic means for changing the stroke of said pump, a control means for said hydraulic means, means moved in relation to the change of stroke of said pump for controlling the movement of said hoist, and means moved in relation to the movement of said hoist for actuating said control means for controlling the deceleration of said hoist, one of said last mentioned means being constructed and arranged to make one of said relations a non-linear relation.

GAROLD A. KANE.

REFERENCES CITED

The following references are of record in the file of this patent:

UNITED STATES PATENTS

Number	Name	Date
1,861,116	Ernst	May 31, 1932
2,093,690	Wiedmann	Sept. 21, 1937
2,129,613	Wünsch	Sept. 6, 1938
2,139,185	Engel	Dec. 6, 1938
2,148,262	Doe	Feb. 21, 1939
2,148,277	Rose	Feb. 21, 1939
2,211,406	Cannon	Aug. 13, 1940
2,213,968	Rose	Sept. 10, 1940
2,227,170	Ziebolz	Dec. 31, 1940

FOREIGN PATENTS

Number	Country	Date
404,385	Great Britain	Jan. 18, 1934