April 18, 1944. E. J. LEUTHOLD 2,346,654

HEATING FILAMENT CIRCUIT

Original Filed July 17, 1937 2 Sheets-Sheet 1

Fig. 1.

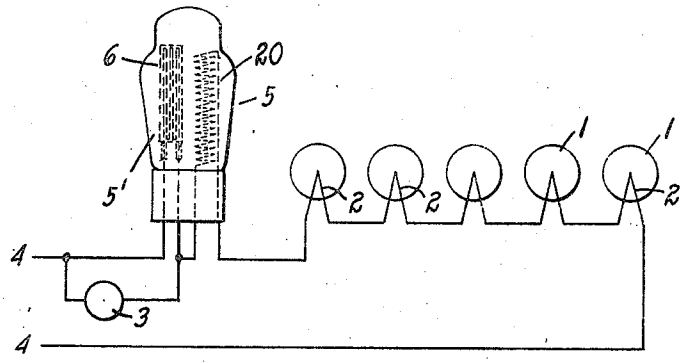

Fig. 2.

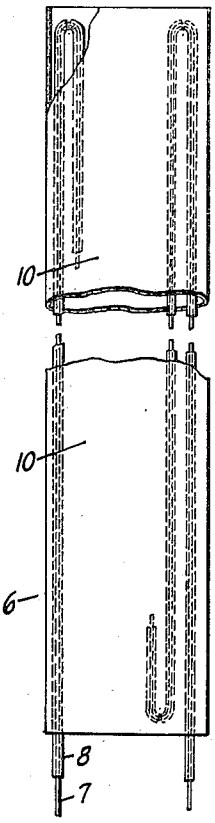

Fig. 3.

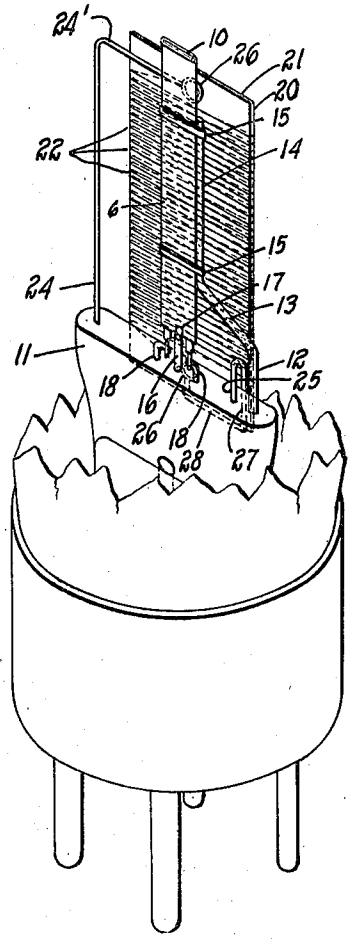

Fig. 4.

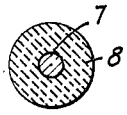

INVENTOR.
Edgar J. Leuthold.

BY Bartlett Tyler Scott & Keel
ATTORNEYS.

April 18, 1944. E. J. LEUTHOLD 2,346,654

HEATING FILAMENT CIRCUIT

Original Filed July 17, 1937 2 Sheets-Sheet 2

Fig. 5.

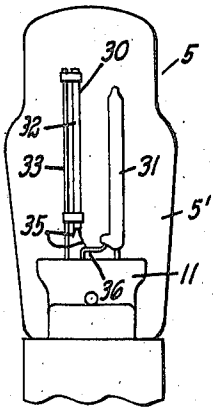

Fig. 6.

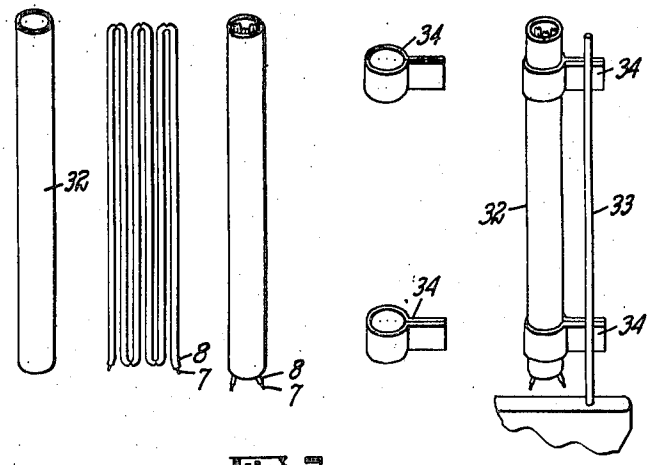

Fig. 8.

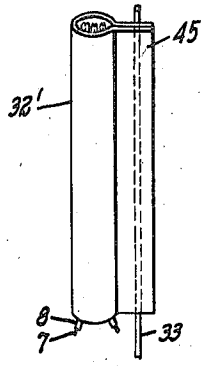

Fig. 7.

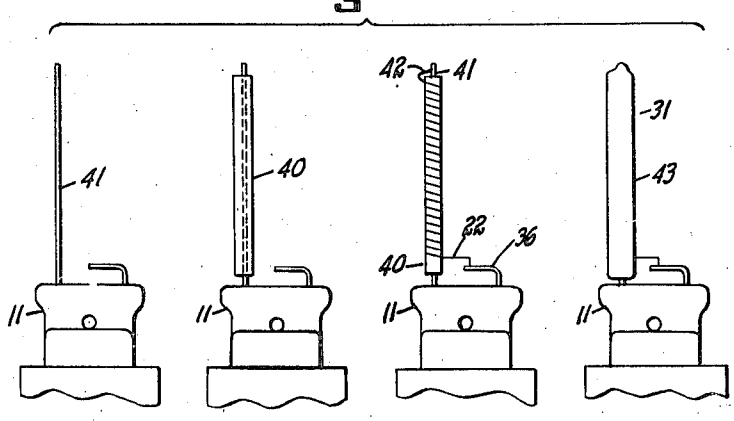

Fig. 9.

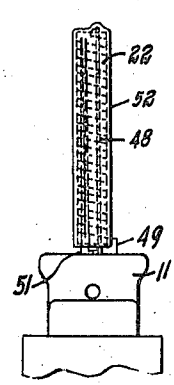

Fig. 10

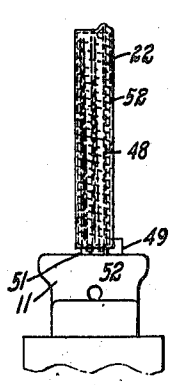

Fig. 11.

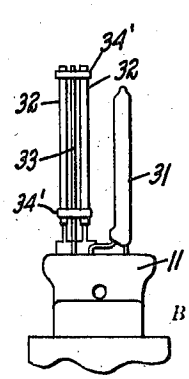

Fig. 10a.

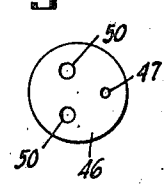

Fig. 9a.

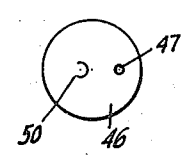

INVENTOR
Edgar J. Leuthold.
By Bartlett Eyre Scott & Keel
ATTORNEYS

Patented Apr. 18, 1944

2,346,654

UNITED STATES PATENT OFFICE

2,346,654

HEATING FILAMENT CIRCUIT

Edgar J. Leuthold, Newark, N. J., assignor to Tung-Sol Lamp Works, Inc., Newark, N. J., a corporation of Delaware

Continuation of application Serial No. 154,419, July 17, 1937. This application November 24, 1939, Serial No. 306,029

8 Claims. (Cl. 250—27)

This application is a continuation of my application Serial No. 154,419, filed July 19, 1937.

This invention relates to heating filament circuits for radio tube sets and a resistance protective unit therefor.

In certain of the conventional radio tube circuits the filaments of the tubes are connected in series with each other and an additional resistance with one or more pilot lights connected across a part of this additional resistance. The filaments are usually of conventional ceramic coated tungsten wire and a high surge current flows through the circuit when the circuit is initially closed, which surge current produces a surge voltage across the pilot lamp or lamps with the result that if the shunt resistance is of a value to supply the required voltage drop to the pilot lamp in the hot condition for efficient lighting the pilot lamp soon burns out after a few such surges. In practice, however, the shunt resistance is reduced in order to reduce the surge but at the sacrifice of using a lower running voltage across the pilot lamp.

Different means have been proposed in an effort to protect the pilot lamp from the surges and yet have the lamp furnish the desired candle power when the tubes are hot. One such proposal is to introduce into the circuit a high resistance initially and then later a lower resistance in an effort to keep a constant filament current and prevent the overall surge. One objection to this method is that the lowered current in the circuit results in the tubes taking too long to heat up for operation of the set. Another proposed method is the use of a time relay or a heat delay relay which removes a shunt connected across the lamp or shunts out a resistance which is in series with the lamp after a given time delay. Ballast protector resistor units have also been proposed for use in such radio circuits embodying ordinary resistances connected in heat interchange relation or having certain temperature coefficients or both, for the purpose of minimizing the surge across the pilot lamp or lamps. Each of these prior proposed methods is objectionable either because it impedes or delays heating up of the radio tube filaments, or it is complex and expensive, or there is insufficient correlation between the radio tube filaments and the proposed protective means to accomplish perfectly the essentials of quick heating of the radio tube filaments, the prevention of surges through the pilot lamp or lamps, the required light efficiency of the lamp or lamps after the radio set hot condition is reached, and the prevention of burn outs of the shunt resistors when the pilot lamps are out.

One object of the invention is a novel and improved heating filament circuit including a pilot lamp which is characterized by the substantial reduction of or by the absence of the aforesaid objectionable characteristics from the circuit.

A further object of the invention is a circuit of the above indicated character including a resistance unit of novel structure and operation by the employment of which the above indicated essentials of the circuit are accomplished.

The surge in the radio tube circuits including filaments made of ceramic coated tungsten wire is due to or its effect is aggravated by the fact that the additional mass of the refractory or ceramic coating delays the rise in temperature and hence the resistance of the tungsten wire filament which has a positive temperature coefficient, with the result that there is an appreciable time wherein the resistance in the circuit is comparatively low after the initial closing of the circuit. The ceramic coating seems to form a sort of reservoir for and absorb the heat produced in the filament and to have a cooling effect, thereby delaying the heating of the filaments.

It is an object of this invention to devise a resistance protector unit embodying a shunt resistor to the pilot lamp or lamps having a layer of refractory material of the same general character of the refractory coating of the filaments of the tubes, and of a depth and mass such that the above indicated essentials of the circuit are obtained and particularly such a protective resistor unit enclosed in an evacuated bulb.

Other objects of the invention will hereinafter appear.

For a better understanding of the invention reference may be had to the accompanying drawings, wherein—

Fig. 1 is a diagrammatic view illustrating the circuit in the applicant's protector unit;

Fig. 2 is a side view of an element of the unit with parts broken away;

Fig. 3 is a perspective view of the elements of the unit in assembled position;

Fig. 4 is a cross section of the wire of the shunt resistor element;

Figs. 5 to 7 illustrate a modified form of construction embodying the invention;

Fig. 8 shows a modified detail;

Figs. 9 and 9*a* show another modified form of device embodying the invention; and

Figs. 10, 10*a* and 11 illustrate further modifications.

Referring to Fig. 1 of the drawings, the numeral 1 indicates the several radio tubes of a radio tube set having heating filaments 2 therein which are connected in series with a pilot lamp or lamps 3, only one such lamp 3 being illustrated in the embodiment shown. The heating filaments 2 are or may be of conventional tungsten wire coated with a ceramic or other refractory material, such for example as aluminum oxide, magnesium oxide, beryllium oxide, titanium oxide, zirconium oxide, or any combination of these oxides with silica which will form a eutectic and the melting point should not be less than 1400° C., or silica may be used alone. Filaments with thin coatings of ceramic material are used in many of the radio tubes. The circuit is connected across either an A. C. or D. C. supply line indicated at 4. The novel protector unit is indicated at 5 and comprises a shunt resistor filament 6 contained in an evacuated envelope 5' and connected in shunt to the pilot lamp 3. The resistor 6 is formed of tungsten wire 7 with a mass of a refractory material 8 thereabout. The body 8 may be of the same refractory material utilized in coating the filaments 2 of the radio tubes.

The resistor 6 may be formed and coiled to assume any suitable form, but the formation of the same into a multiplicity of loops, illustrated in Figs. 1 and 2, to obtain the required length of resistor and the disposition of these loops within a flat tube or envelope 10, as illustrated in the drawings, results in a convenient and satisfactory unit. A flattened tube 10 of metal, as of nickel or nickel alloy, is preferable. The envelope 10 may be mounted in any suitable manner upon the press 11, and in the particular embodiment shown a support wire 12 is fused into the press adjacent one edge thereof with a bend 13 formed therein intermediate the ends of the support wire, and the upper end 14 being disposed parallel to the lower part thereof to which part 14 the envelope 10 is directly fastened. This fastening is effected by metallic bands 15 passing around the wire 14 and the envelope 10 and welded thereto, the wire part 14 engaging the edge of the envelope. Another anchoring support for the envelope is indicated at 16, this support being fused into the press 11 and being welded at 17 to the side of the envelope at the lower end thereof. Current is connected to the resistor unit 6 by means of the conductors 18 fused into the press.

In the particular embodiment shown the evacuated tube 5' also contains a line resistor unit 20. This embodies a mica strip 21 having wound therearound the required resistance wire 22. This line resistor 20 may be mounted in any suitable manner upon the press 11 and in the particular embodiment shown it is mounted upon a pair of support wires 24 and 25 which are fused into the press. At the upper end of the support 24 a portion 24' is carried at right angles to the upright part 24 and the free end of the part 24' is welded or otherwise fastened to a metallic bead or eyelet 26 mounted in the mica. The support 25 is bent over to form a downwardly extending part 27 which is again bent at right angles to form a part 28 and the free end of the latter is turned upwardly and welded or otherwise fastened to the eyelet or bead 26 fastened near the lower end of the mica strip 21. The support wires 24 and 25 also form the current leads for the unit, the ends of the resistance wire 22 being electrically connected with the beads or eyelets 26. Thus, in the particular embodiment shown, the line resistor unit 20 is disposed adjacent to but spaced from the envelope 10.

The refractory body 8 for the tungsten wire 7 may be of any suitable depth to produce the desired results. I have found, however, that with the tungsten wire 7 of approximately a diameter of .00138 to .0017 inch and applying a refractory or ceramic layer to a depth of approximately .0045 to .005 inch, making a total over-all diameter of approximately .011 to .012 inch, and making the resistor of the required length when hot to give the required voltage drop across the pilot lamp 3 for efficient lighting and long life and enclosing the resistor unit in the evacuated bulb 5', effective protection of the pilot lamp 3 is obtained against surges while the rate of heating of the filaments 2 is not decreased.

A sufficient length of the wire 7—8 may be readily assembled into the flat tube or elongated envelope 10, the loops of the resistor being contained within the plane of the envelope. The depth of the body 8 of the wire, may as indicated, be varied within limits. If the depth or thickness is no greater than the thickness of the refractory coating on the filaments 2 the resistor would not remain cool long enough on the surge to produce the best results, but by making the depth of the body 8 of the resistor greater, as for example approximately twice to four times the depth of the coating on the filaments 2, the desired delayed heating of the wire 7 and elevation of the resistance is obtained at the start. This greater depth of coating makes it possible for the shunt resistor, particularly when contained in the evacuated bulb, to withstand the full set current when the pilot lamp either burns out or is removed. The mass on the wire seems to absorb the heat as it builds up from the wire and prevents the resistance of the wire from building up too rapidly. At the initial resistance of the resistor the surges of current through the ceramic coated filaments do not produce a harmful drop across the pilot lamp. Generally, the greater the initial cooling the less the final resistance need be and hence the less final heating of the ceramic filament, and hence the tungsten wire 7 need not be placed close together but can be spread out in co-planar relation within the envelope 10.

By using the construction described above it has been found that the resistor will withstand not only the normal surge of current while in parallel with the pilot lamp, but will withstand full set current surge with the pilot lamp out and continuous full set current when the set is operating without pilot, and there is no appreciable slowing up of the heating of the filaments 2 of the tubes. The resistor 7—8 ordinarily glows brightly when the pilot lamp is out and the set current is reduced slightly but the reduction

is not enough to interfere with the operation of the set.

The resistance wire 7 should have a high positive temperature co-efficient of resistance and a high melting point such as tungsten. It must be fine or small enough so that it can build up its temperature at the running by-pass current (as for example .150 ampere through resistor, .150 ampere through 6.3 volt pilot lamp, set current .300 ampere). The flattened nickel tube 10 helps the resistance wire to conserve its heat for the building up of its resistance, while the ceramic or refractory body 8 delays the heating of the wire for an appreciable period after the initial closing of the circuit. By positioning the resistor in an evacuated bulb it may be heated to the glowing temperature without burning out and there is no gas present in the evacuated bulb which would tend to keep the resistor 7 too cool and would limit its heat build up. The vacuum also assists in preventing heat exchange.

The resistance wire 22 may be of any suitable character such as Nichrome wire .004 inch in diameter and this wire is preferably coated with the ceramic or refractory material, as for example the above described material, and while the resistor unit 20 may be mounted outside of the bulb 5' it is preferably mounted therein and in the particular embodiment shown there is no appreciable heat interchange between the elements 6 and 20.

In the modification of Figs. 5, 6 and 7 the shunt protector resistance unit is indicated at 30, while the series resistor is indicated at 31.

The unit 30 comprises a bunch of loops of resistance wire 7—8 of the character shown in Figs. 1 to 4 mounted within the metallic envelope or tube 32 and this tube 32 may be supported in any suitable manner upon the press 11, as for example by means of a wire support 33 to which are welded a pair of fittings 34 carrying the tube 32. The terminals 35 of the resistance units 7—8 are electrically connected with the wire support 33 and a wire terminal 36.

The series resistor unit 31 comprises a refractory tube 40 inserted over a support wire 41, with the series resistance wire 22 wound or coiled about the tube 40, one end of the resistance wire 22 being electrically connected at 42 with the upper end of the support wire 41, and the other end being electrically connected with the terminal 36. The assembly of the tube 40, the wire support 41 and the resistance wire 22 is preferably dipped in a suitable refractory material, such for example as of aluminum magnesium silicate to form an insulating coating 43 about the tube 40. This coating 43 assists in anchoring the parts together. The tube 40 may be of any refractory material.

In the modification of Fig. 8 a metallic tube 32' for housing the shunt protector resistance 7—8 is formed from a metallic sheet as of nickel, with two mating parts 45 forming the means for mounting of the unit upon the wire support 33 as by welding.

In the modification of Figs. 9 and 9a an elongated refractory block 46 is provided for housing both the shunt protector unit and carrying the series resistor unit. This block 46 is provided with a small opening 47 lengthwise thereof for the reception of a support wire 48. The series resistance wire 22 is wound about the exterior surface of this block 46 and one end of this resistance wire is electrically connected to the upper end of the wire support 48 and the other end is electrically connected with a wire terminal 49. The block 46 is provided with a reception of the larger opening 50 lengthwise thereof for the shunt protector resistance 7—8 and the terminals of the resistance protector 7—8 are electrically connected respectively with the wire support 48 and a wire terminal 51. The block 46 may be dipped to form a coating 52 thereabout similar to the coating 43 of Fig. 7.

Figs. 10 and 10a show a modification similar to Figs. 9 and 9a except that here the block 46 is provided with a pair of openings 50 lengthwise thereof to house a pair of protector resistance units 7—8 for a pair of pilot lamps.

The modification of Fig. 11 is similar to the modification of Figs. 5 to 7 except that here the metallic tube 32 is duplicated for the housing of a pair of shunt protector units 7—8 for protecting a pair of pilot lamps. These two tubes 32 may be fastened to the wire support 33 by means of fittings 34'.

The circuit of Figs. 5 to 9 is the same as that illustrated in Fig. 1, and the circuit of Figs. 10 and 11 differs from the circuit of Fig. 1 only in the provision of a pair of pilot lamps 3 instead of one, in shunt to each of which is connected a shunt protector unit 7—8.

The operation of the modified device of Figs. 5 to 8 and Fig. 11 in the circuit is the same as described above with respect to Figs. 1 to 4, except that here the series resistor 31 is still further removed and spaced from the shunt protector unit with a minimum heat interchange between the two units. In the operation of the circuit including the modified device of Figs. 9 and 10 the heating up of the shunt resistance 7—8 after closing the circuit is hastened because of the heat interchange relation existing between the series resistance 22 and the shunt protector resistance 7—8. Otherwise, the operation is similar to that described above. The bunching of the loops of the filament 7—8 contained in the enclosure result in some heat interchange between the loops.

The ratio of the overall diameter of the protective resistor wire to the tungsten wire diameter forming the core of the wire ranges from 5.8 to 8.5. The ratio of overall diameter to the tungsten wire diameter on certain commercial radio tubes having filament wire diameters of from .0014 inch to .0118 inch ranges from 4.67 to 5.6, the 4.67 ratio, for example, applying to the .3 ampere tubes used in the series circuits of modern receivers and the 5.6 ratio applying to the .15 ampere tubes which are used chiefly in automobile radio sets. With the use of .15 ampere pilot lamps (designated 3 in Fig. 1) in the circuits of modern sets wherein the voltage across the circuit is 110 volts and the current of the heating circuit .3 ampere, I have found protective resistor units embodying the invention of this application as particularly suitable having the following specifications:

Tungsten wire diameter	Coating overall diameter	Number filament legs	Sleeve
Inches .00163	*Inches* .011-.012	6	.065" O. D. x 33 mm. long.
.00163	.0095-.0105	12 tapped in center for two lamps.	.100" O. D. x 35 mm. long.
.00163	.010±.0005	do	.100" O. D. x 35 mm. long.

I claim:

1. A resistance unit for protecting a pilot lamp connected in circuit in series with radio tube heating filaments, comprising a resistance wire element enclosed in an evacuated bulb and adapted to be connected in circuit in parallel with said pilot lamp, said wire having a positive temperature coefficient and having therearound a refractory electrical insulating body of relatively large volume in thermal relation therewith the ratio of the thickness of the insulating body to the diameter of said wire being greater than the ratio of the thickness of the coating on each heating filament to the diameter of such filament and so related thereto as to first delay the heating of the resistance wire up to its normal operating temperature at the initial closing of the circuit and then to permit a rise to the normal operating temperature and resistance thereof.

2. In a heating filament circuit for radio tube sets, a plurality of radio tube heating filaments, said filaments having a refractory coating thereon with the ratio of the overall diameter of the coated filaments to the filament wire diameter from 4.5 to 5.6, a pilot lamp connected in series with the aforesaid filaments, a protective resistor connected in parallel with said pilot lamp, said resistor being mounted within an evacuated bulb and formed of wire having a positive temperature coefficient and provided with a refractory coating thereon with the ratio of the overall diameter of the protective resistance wire to the wire diameter forming a core from 5.8 to 8.5.

3. In a heating filament circuit for radio tube sets, a plurality of radio tube heating filaments, said filaments having a refractory coating thereon with the ratio of the overall diameter of the coated filaments to the filament wire diameter approximately 4.6, a pilot lamp connected in series with the aforesaid filaments, a protective resistor connected in parallel with said pilot lamp, said resistor being mounted within an evacuated bulb and formed of wire having a positive temperature coefficient and provided with a refractory coating thereon with the ratio of the overall diameter of the protective resistance wire to the wire diameter forming a core from 5.8 to 8.5.

4. In a heating filament circuit for radio tube sets, a plurality of radio tube heating filaments, said filaments having a refractory coating thereon with the ratio of the overall diameter of the coated filaments to the filament wire diameter approximately 5.6, a pilot lamp connected in series with the aforesaid filaments, a protective resistor connected in parallel with said pilot lamp, said resistor being mounted within an evacuated bulb and formed of wire having a positive temperature coefficient and provided with a refractory coating thereon with the ratio of the overall diameter of the protective resistance wire to the wire diameter forming a core from 5.8 to 8.5.

5. In a heating filament circuit for radio tube sets, a plurality of radio tube heating filaments, said filaments having a refractory coating thereon, a pilot lamp connected in series with the aforesaid filaments, and a protective resistor connected in parallel with said pilot lamp, said resistor being mounted within an evacuated bulb and formed of wire having a positive temperature coefficient and provided with a refractory coating thereon, the ratio of the overall diameter of the protector resistance wire to the wire diameter being greater than the ratio of the overall diameter of the coated heating filaments to the diameter of the heating filaments and so related thereto as to effect a delay of the heating of the protective resistance wire up to its normal operating temperature and resistance at the initial closing of the circuit while permitting a subsequent rise to such normal operating temperature and resistance.

6. In a radio set having vacuum tubes with resistance elements therein certain of said resistance elements serving as heaters for cathodes, a circuit in which said resistance elements are connected in series across a source of power, a dial light connected across a portion only of one of said elements, the said portion of said last named element having a longer thermal lag than the element of the remainder of said tubes in said radio set.

7. In a heating filament circuit for radio tube sets, a plurality of radio tube heating filaments, said filaments having a refractory coating thereon, a pilot lamp connected in series with the aforesaid filaments and a protective resistor filament connected in parallel with said pilot lamp, said filaments thus forming a series circuit with the combined currents which flow through the parallel lamp and protective resistor filament circuit flowing through the other filaments, said resistor filament being also mounted within an evacuated bulb and formed of wire having a refractory coating thereon, the protective resistor filament having a positive temperature coefficient of resistance and an inherent time element lag with respect to the heating up of the others of said filaments so as to effect a delay of the heating of the protective resistor filament wire up to its normal operating temperature and resistance at the initial closing of the circuit while permitting a subsequent rise to such normal operating temperature and resistance.

8. In a heating filament circuit for radio tube sets, a plurality of radio tube heating filaments connected in series, a pilot lamp and a protective resistor filament connected in parallel and in series with the aforesaid filaments, said filaments thus forming a series circuit with the combined currents which flow through the parallel lamp and protective resistor filament circuit flowing through the other filaments, said protective resistor filament being also mounted within an evacuated bulb and being confined in loops in an envelope, the protective resistance filament having a positive temperature coefficient of resistance and an inherent time element lag with respect to the heating up of the other filaments in the circuit so as to effect a delay of the heating of the protective resistance wire up to its normal operating temperature and resistance at the initial closing of the circuit while permitting a subsequent rise to such normal operating temperature and resistance, and the constants of the filaments and the lamp being such that the operation of the set is unimpaired upon the disconnection of the pilot lamp.

EDGAR J. LEUTHOLD.

CERTIFICATE OF CORRECTION.

Patent No. 2,346,654. April 18, 1944.

EDGAR J. LEUTHOLD.

It is hereby certified that error appears in the printed specification of the above numbered patent requiring correction as follows: Page 4, first column, line 4, claim 1, before "heating" insert --coated--; and that the said Letters Patent should be read with this correction therein that the same may conform to the record of the case in the Patent Office.

Signed and sealed this 30th day of May, A. D, 1944.

Leslie Frazer

(Seal) Acting Commissioner of Patents.