US00D765774S

(12) **United States Design Patent** (10) **Patent No.: US D765,774 S**
Tanaka (45) **Date of Patent: ** Sep. 6, 2016**

(54) **TAPE CARTRIDGE FOR TAPE PRINTING MACHINE**

(71) Applicant: **BROTHER INDUSTRIES, LTD.**, Nagoya-shi, Aichi-ken (JP)

(72) Inventor: **Mitsugi Tanaka**, Nagoya (JP)

(73) Assignee: **BROTHER INDUSTRIES, LTD.**, Nagoya (JP)

(**) Term: **14 Years**

(21) Appl. No.: **29/490,201**

(22) Filed: **May 7, 2014**

(30) **Foreign Application Priority Data**

Nov. 8, 2013 (JP) 2013-26122

(51) **LOC (10) Cl.** **18-02**

(52) **U.S. Cl.**
USPC **D18/56**

(58) **Field of Classification Search**
USPC D18/12, 40, 43–44, 56; 347/214; 360/132, 134; 400/194–196, 207–208, 400/208.1, 235.1, 236, 242, 247, 331; D14/484
CPC B41J 17/28; B41J 17/30; B41J 17/32; B41J 21/00; B41J 35/28; B41J 11/44; B41J 31/00; B41J 32/00; B41J 33/14; B41J 35/00; B41J 35/22
See application file for complete search history.

(56) **References Cited**

U.S. PATENT DOCUMENTS

D270,914	S	*	10/1983	Nader	D18/44
D333,481	S	*	2/1993	Laurent	D18/12
5,588,756	A	*	12/1996	Hamisch et al.	400/208
D378,759	S	*	4/1997	Hattori et al.	D18/56
D475,717	S	*	6/2003	Nonomura	D14/484
D483,772	S	*	12/2003	Nonomura	D14/484
D525,297	S	*	7/2006	Okuchi et al.	D18/56
D593,595	S	*	6/2009	Kubota et al.	D18/12
D726,815	S	*	4/2015	Tanaka	D18/56
9,067,441	B2	*	6/2015	Tanaka	B41J 11/22
D733,796	S	*	7/2015	Yamazaki	D18/56
9,193,557	B2	*	11/2015	Tanaka	B65C 9/00
2013/0292061	A1	*	11/2013	Tanaka	B65H 35/002 156/538

* cited by examiner

Primary Examiner — Cathy Anne MacCormac
(74) *Attorney, Agent, or Firm* — Oliff PLC

(57) **CLAIM**

The ornamental design for a tape cartridge for tape printing machine, as shown and described.

DESCRIPTION

FIG. **1** is a front perspective view of a tape cartridge for tape printing machine;
FIG. **2** is a front view thereof;
FIG. **3** is a top view thereof;
FIG. **4** is a right-side view thereof;
FIG. **5** is a left-side view thereof;
FIG. **6** is a rear view thereof;
FIG. **7** is a bottom view thereof; and,
FIG. **8** is a rear perspective view thereof.
The broken lines depict environmental subject matter only and form no part of the claimed design.

1 Claim, 7 Drawing Sheets

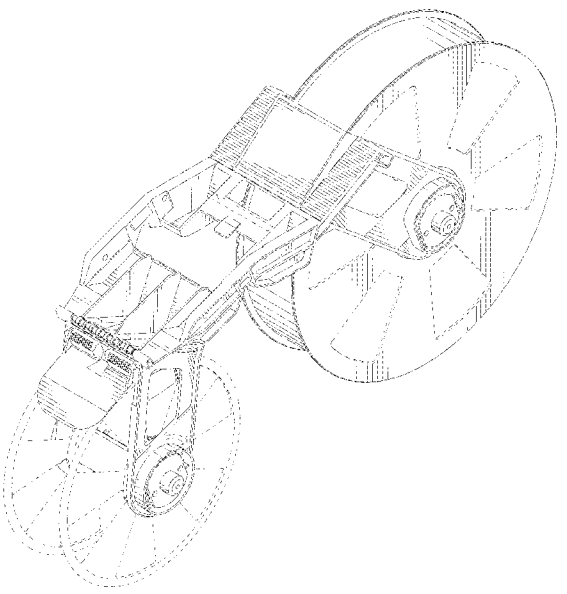

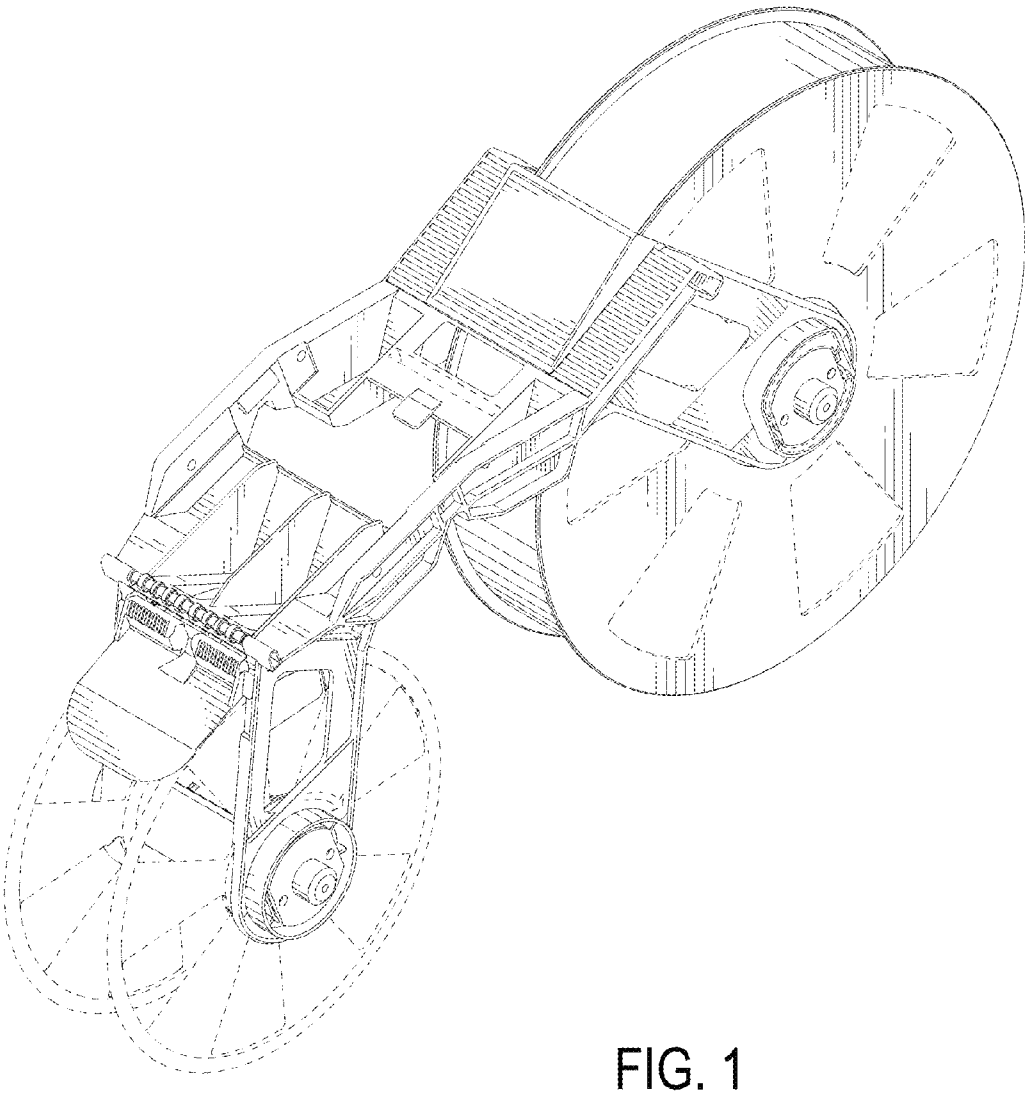

FIG. 1

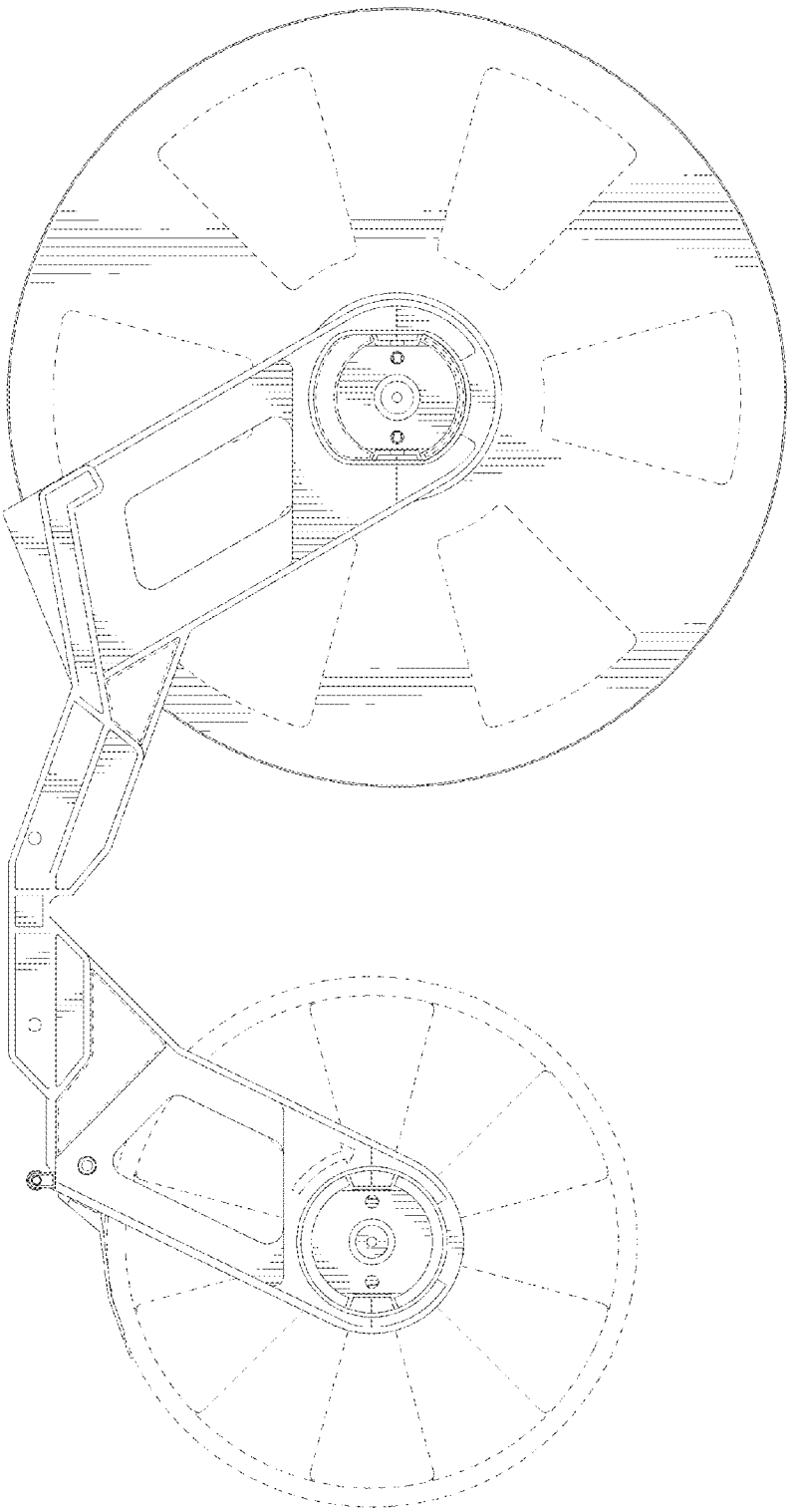

FIG. 2

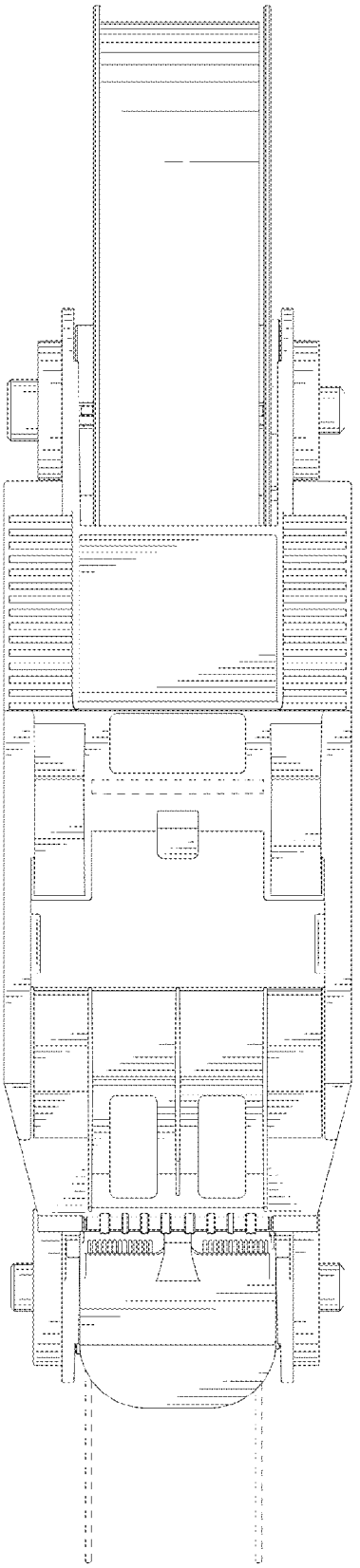

FIG. 3

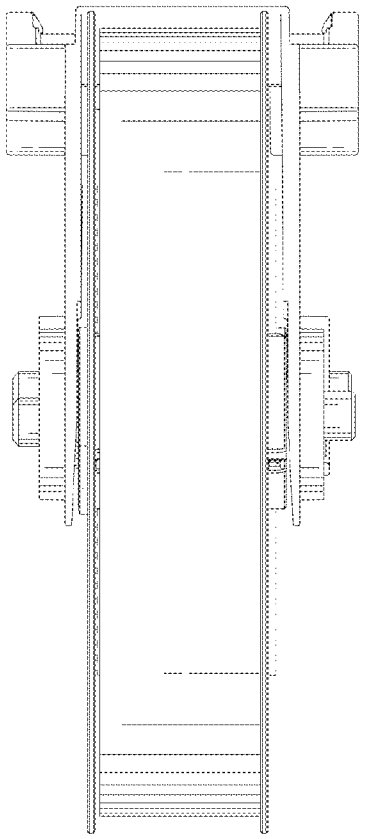

FIG. 4

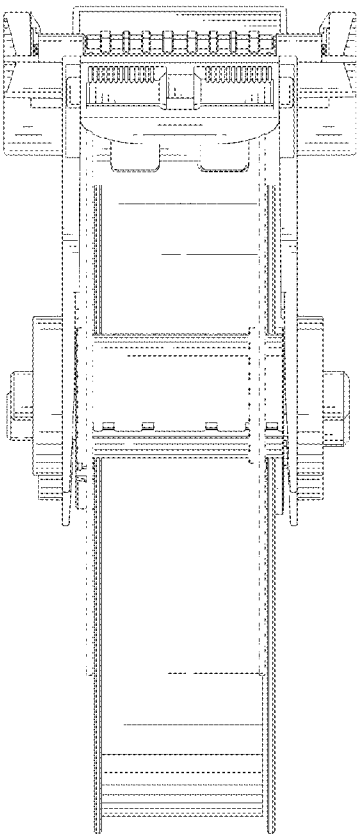

FIG. 5

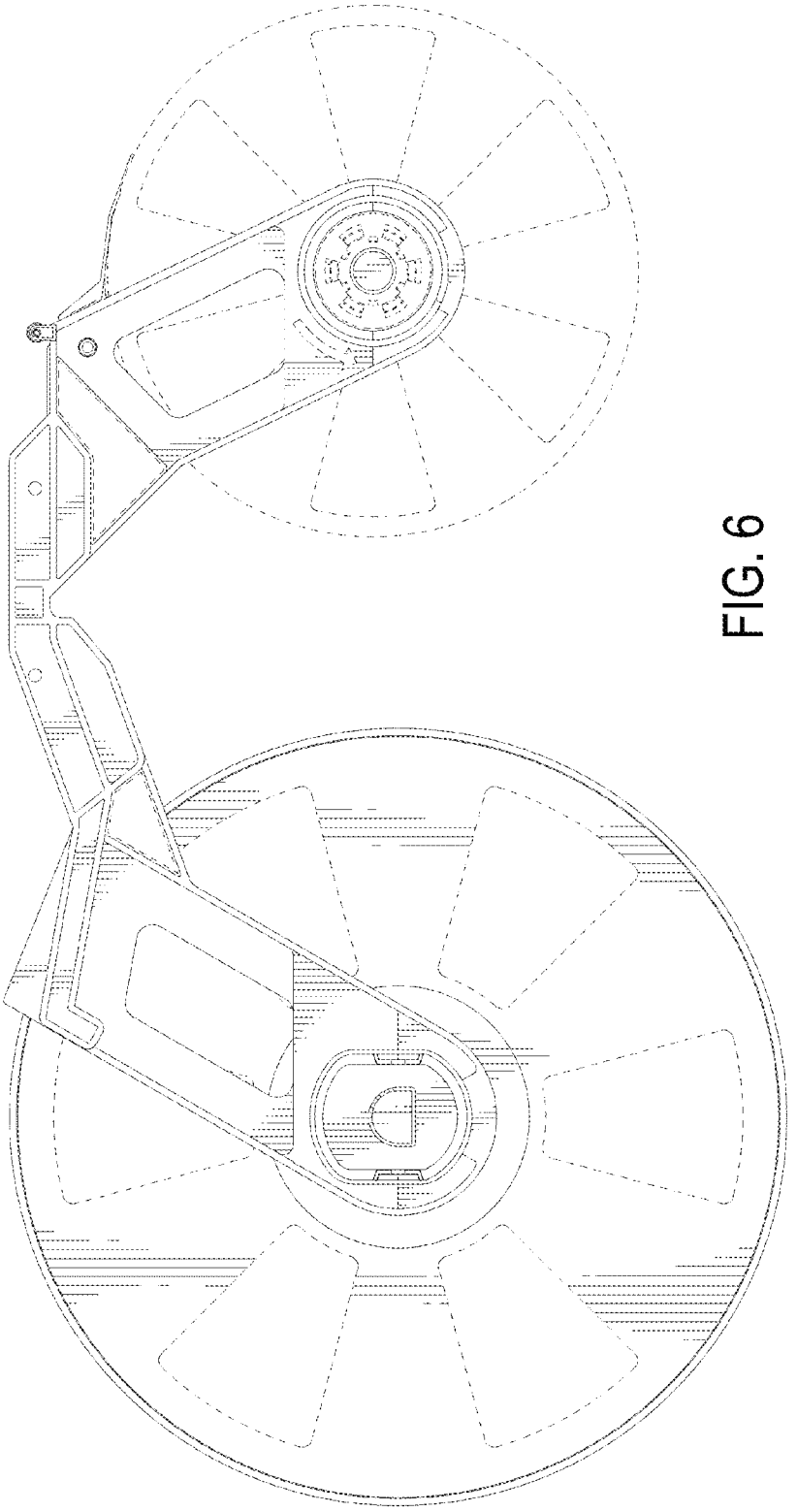

FIG. 6

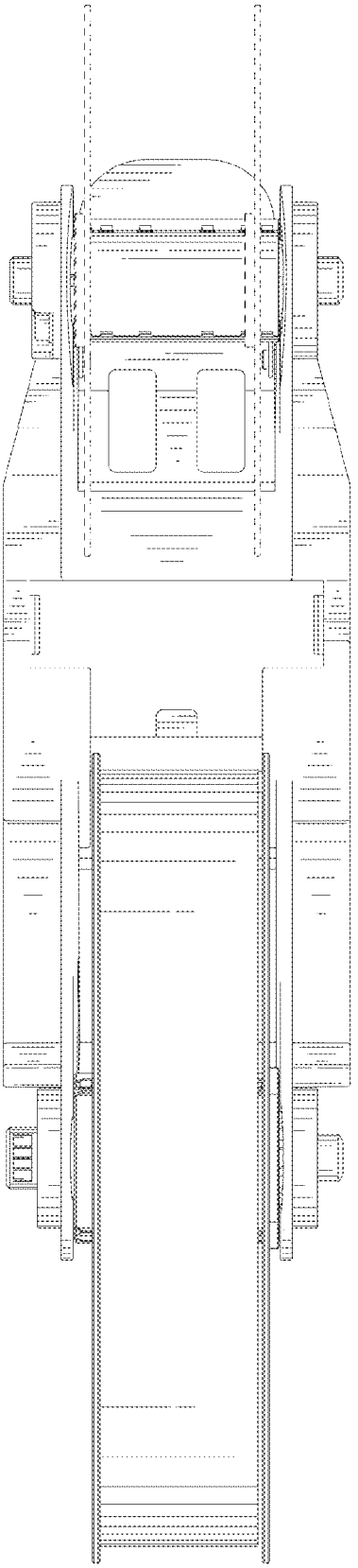

FIG. 7

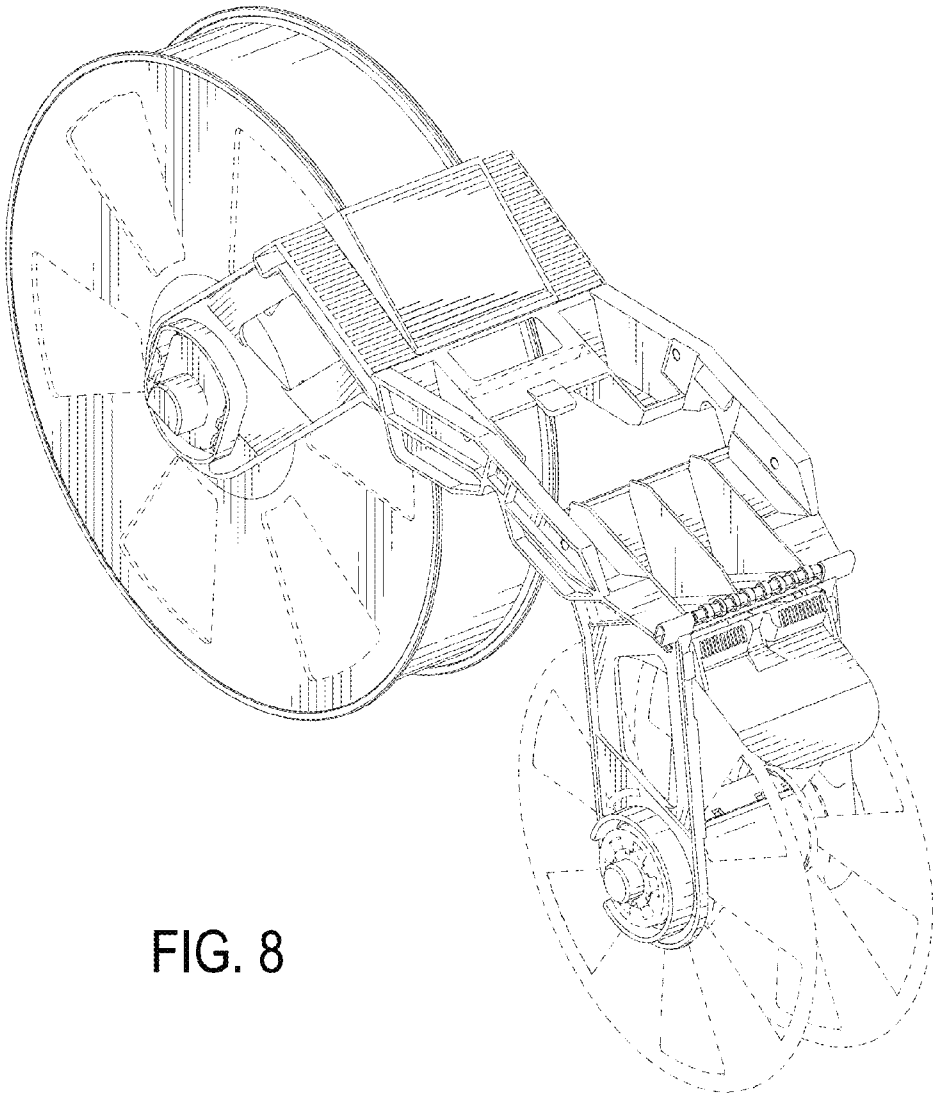

FIG. 8