No. 737,584. PATENTED SEPT. 1, 1903.

S. CONKLE.

RAILWAY RAIL JOINT.

APPLICATION FILED JAN. 20, 1903.

NO MODEL.

Fig. 1.

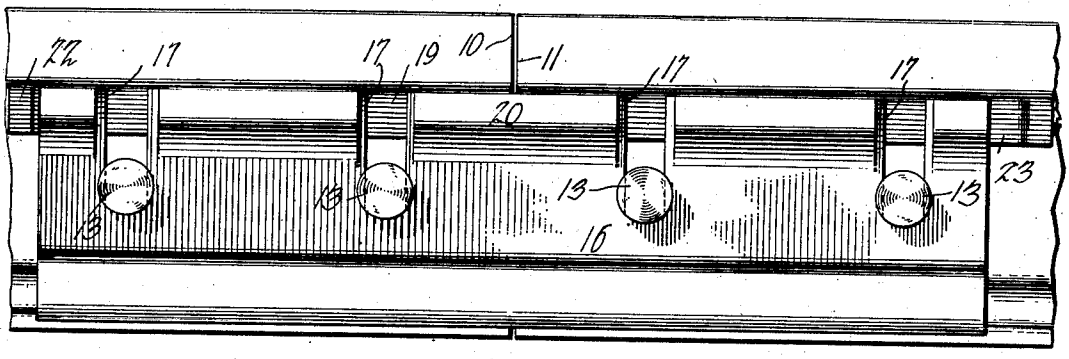

Fig. 2.

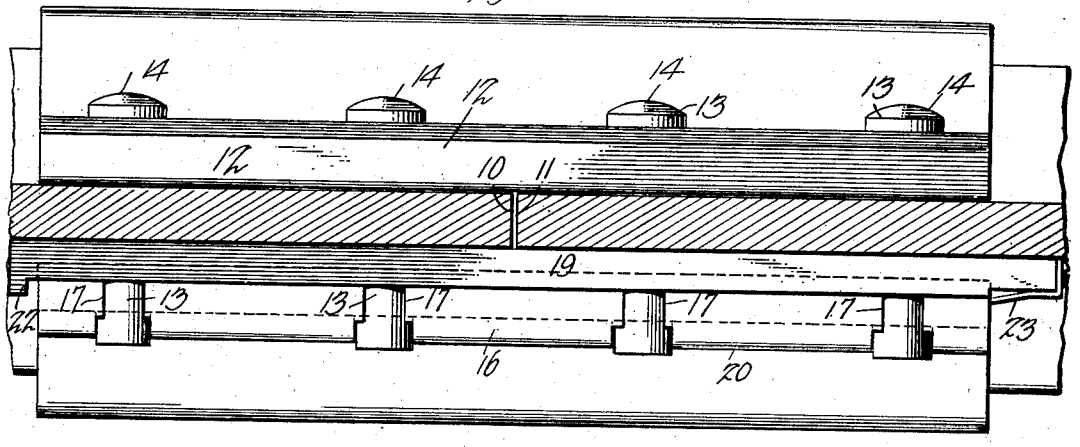

Fig. 3.

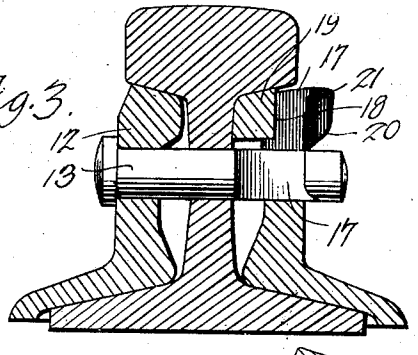

Fig. 4.

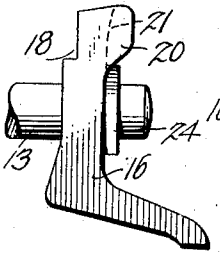

Fig. 5.

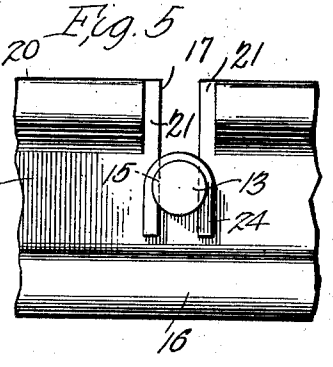

Fig. 6.

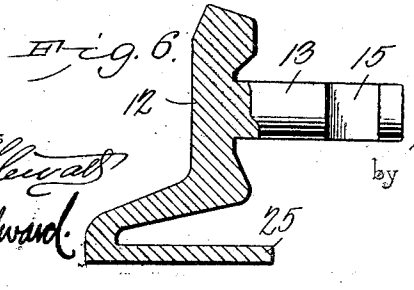

Witnesses
E. F. Stewart
E. K. Woodward.

Samuel Conkle, Inventor:
by Church & Co
Attorneys

THE NORRIS PETERS CO., PHOTO-LITHO., WASHINGTON, D. C.

No. 737,584. Patented September 1, 1903.

UNITED STATES PATENT OFFICE.

SAMUEL CONKLE, OF HOOKSTOWN, PENNSYLVANIA, ASSIGNOR OF ONE-HALF TO JOHN W. RAMSEY, OF GREEN TOWNSHIP, PENNSYLVANIA.

RAILWAY-RAIL JOINT.

SPECIFICATION forming part of Letters Patent No. 737,584, dated September 1, 1903.

Application filed January 20, 1903. Serial No. 139,786. (No model.)

To all whom it may concern:

Be it known that I, SAMUEL CONKLE, a citizen of the United States, residing at Hookstown, in the county of Beaver and State of Pennsylvania, have invented a new and useful Railway-Rail Joint, of which the following is a specification.

This invention relates to railway-rail joints, and has for its object to simplify and cheapen the construction of devices of this character and likewise increase their security and render them easily adjustable to "take up" for wear and easily tightened when the joints work loose.

The invention consists in certain novel features of construction, as hereinafter shown and described and specified in the claims following.

In the drawings illustrative of the invention, in which corresponding parts are denoted by like designating characters in all the figures, Figure 1 is a side elevation. Fig. 2 is a plan view with the rail ends in longitudinal section beneath their treads. Fig. 3 is a transverse section. Figs. 4, 5, and 6 are detail views illustrating modifications in the structure.

The abutting ends of the rails are indicated at 10 11 and will be provided with the usual spaced transverse perforations through the vertical webs for the clamp-bolts.

Upon one side the rail ends are provided with a clamp-plate 12 of the usual construction, and through this plate the clamp-bolts 13 are extended, as shown, the bolts having heads 14 at one end in advance of the plate 12 and with transverse recesses 15 in advance of the opposite side of the vertical webs of the rails, as shown. Embracing the opposite side of the vertical webs from the plate 12 is an opposing plate 16, similar to the plate 12 and provided with spaced cavities 17, adapted to embrace the recesses in the clamp-bolts, as shown. Formed along the inner upper edge of the plate 16 is a longitudinal channel 18, slightly inclined and adapted to receive a correspondingly-inclined wedge-key 19, as shown in Fig. 2. The formation of the channel 18 renders it necessary to extend the upper edge of the plate 16 laterally, as shown at 20, and where the cavities 17 pass through this extension they are formed with inclined shoulders 21 to provide means for the passage of the portion of the clamp-bolt outside the recesses 15, as will be obvious, when the clamp-plate is first placed in position. The wedge-key 19 thus serves to rigidly bind and clamp the parts firmly together and which may likewise be utilized to be tightened when required to take up any looseness between the parts from any cause, and thus tightening may be accomplished at any time by a few blows of a hammer or other implement.

The "head" end of the wedge-key will preferably be formed with an enlargement 22, and the smaller end will be provided with a spring-stop 23, adapted to engage the end of the plate 16 after the wedge-key is driven "home" to prevent its accidental displacement. When the joint is to be dismembered, it is only necessary to compress the spring-catch and drive the wedge-key out, when the plate 16 and other parts may be readily removed.

When for any reason the parts require lateral adjustment or reinforcement, U-shaped washers 24 may be employed within the recesses 15 of the bolts 13 and in advance of the plate 16 to take up any lost motion between the parts and enable the wedge-key to be effectively applied. These washers may be provided of different thickness as required.

The parts may be varied to suit rails of different dimensions and increased or decreased in size as required.

In Fig. 6 a slight modification is shown in the structure, consisting in forming the bolts 13 integral with the plate 12 and extending the plate 12 beneath the tie-flanges of the rails by a lateral web 25; but this would not be a departure from the principle of the invention, as the results produced and the mode of operation would be the same. By this means a very secure permanently-tight rail-joint is produced which may be maintained in a very rigid condition by the expenditure of a very little labor and dispenses with all nuts and other annoying and troublesome attachments, which are constantly working loose or becom-

ing detached. By this simple means the whole joint is secured with one single wedge-key, and the joint can thus be very cheaply constructed and applied to any form or size of rail.

A joint thus constructed will support the rails with great rigidity and will effectually prevent the displacement of the rail ends or the disarrangement of the joints. By this arrangement also all tendency of the joints to become loosened by the impact of the wheels of the passing trains is obviated, as the parts cannot become loosened by any concussion to which they will be subjected, as any concussion to which one rail is subjected will be resisted by the adjoining rail, to which it is rigidly connected. All the rails are thus so rigidly connected that practically continuous rails are produced, which will cause the cars to glide over them with great smoothness and regularity and all jolting and uneven movement prevented.

Another material advantage gained by this construction of joint is that the track may be laid in much less time than with the ordinary joint, as the recessed bolts, clamp-plates, and wedge-keys may be assembled inmuch less time.

Having thus described my invention, what I claim is—

1. In a railway-rail joint, the rails having spaced transverse perforations, a clamp-plate engaging said rails at one side, spaced clamp-bolts extending from said clamp-plate through said perforations and provided with transverse recesses, an opposing clamp-plate engaging said rails upon the opposite side and having cavities engaging said clamp-bolt recesses, and a wedge-key between said opposing plate and rails substantially as described.

2. In a railway-rail joint, the rails having spaced transverse perforations, a clamp-plate engaging said rails at one side, spaced clamp-bolts integral with said clamp-plate and extending through said perforations and provided with transverse recesses, an opposing clamp-plate having cavities engaging said clamp-bolt recesses, and a wedge-key between said opposing clamp-plate and the rails, substantially as described.

3. In a railway-rail joint, the rails having spaced transverse perforations, a clamp-plate engaging one side of said rails and having spaced bolts engaging said perforations, said bolts having transverse recesses, an opposing clamp-plate engaging the opposite side of said rails and having spaced cavities engaging said bolt-recesses and with a longitudinal cavity adjacent to the rails, and a wedge-key engaging said longitudinal cavity and forming a locking means between the opposing plate and rails, substantially as described.

4. In a railway-rail joint, the rails having spaced transverse perforations, a clamp-plate engaging said rails at one side, spaced clamp-bolts extending from said clamp-plate through said perforations and provided with transverse recesses, an opposing clamp-plate engaging said rails upon the opposite side and having cavities embracing said clamp-bolt recesses and with inclined sides engaging the outer ends of said clamp-bolt recesses, and a wedge-key between said opposing plate and rails, substantially as described.

5. In a railway-rail joint, the rails having spaced transverse perforations, a clamp-plate engaging said rails at one side, spaced clamp-bolts extending from said clamp-plate through said perforations and provided with transverse recesses, an opposing clamp-plate engaging said rails upon the opposite side and having cavities embracing said clamp-bolt recesses, **U**-shaped washers engaging said recesses in advance of said opposing clamp-plate, and a wedge-key between said opposing clamp-plate and the rails, substantially as described.

6. In a railway-rail joint, the rails having spaced transverse perforations, a clamp-plate engaging said rails at one side, spaced clamp-bolts extending from said clamp-plate through said perforations and provided with transverse recesses, an opposing clamp-plate engaging said rails upon the opposite side and having cavities engaging said clamp-bolt recesses, a wedge-key between said clamp-plate and rails and having a yieldable catch at its smaller end adapted to engage the clamp-plate and prevent the removal of the key, substantially as described.

7. In a railway-rail joint, the rails having spaced transverse perforations, a clamp-plate engaging said rails at one side, spaced clamp-bolts extending from said clamp-plate through said perforations and provided with transverse recesses, an opposing clamp-plate engaging said rails upon the opposite side and having cavities engaging said clamp-bolt recesses, and provided with a lateral web extending beneath the tie-flange, and a wedge-key between said opposing plate and rails, substantially as described.

In testimony that I claim the foregoing as my own I have hereto affixed my signature in the presence of two witnesses.

SAMUEL CONKLE.

Witnesses:
A. A. BATCHELOR,
J. W. RAMSEY.