E. R. GILL.

FIRE EXTINGUISHING APPARATUS.

APPLICATION FILED DEC. 30, 1912. RENEWED MAR. 30, 1916.

1,250,576. Patented Dec. 18, 1917.

Fig. 1.

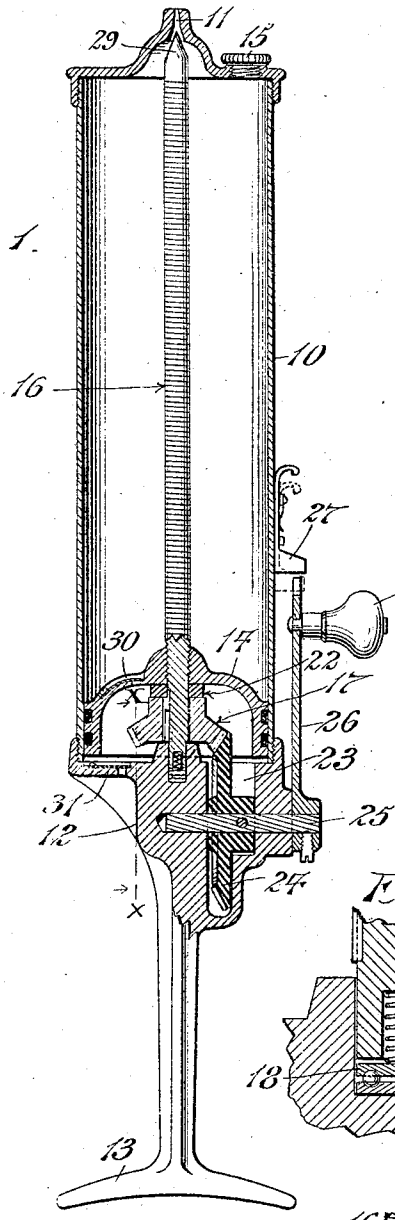

Fig. 2.

Fig. 3.

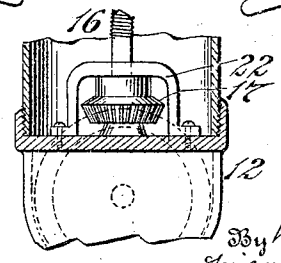

Fig. 4.

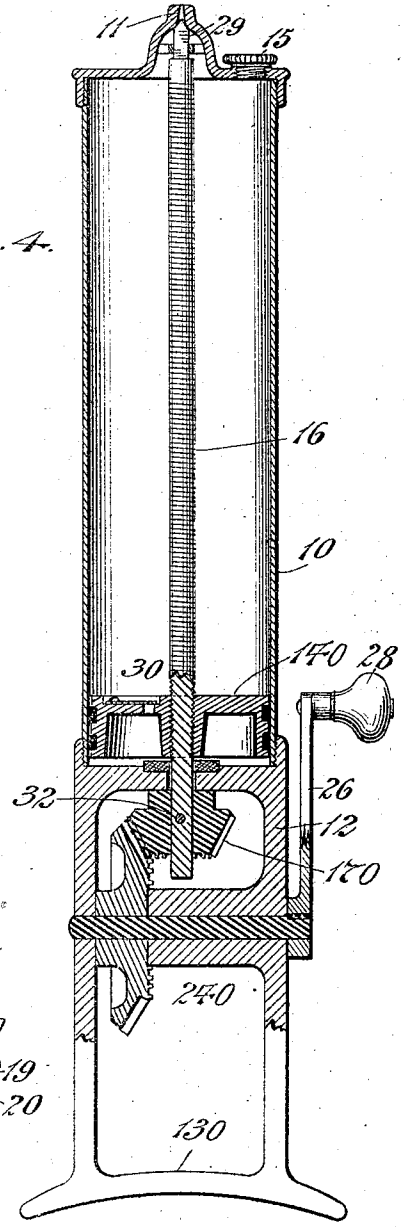

Witnesses:
Edward Rowland
Katharine C. Mead

Edwin R. Gill
Inventor

By his Attorneys
Wilkinson, Witherspoon and Mack

UNITED STATES PATENT OFFICE.

EDWIN R. GILL, OF YONKERS, NEW YORK, ASSIGNOR TO S. F. HAYWARD & COMPANY, A CORPORATION OF NEW YORK.

FIRE-EXTINGUISHING APPARATUS.

1,250,576. Specification of Letters Patent. Patented Dec. 18, 1917.

Application filed December 30, 1912, Serial No. 739,274. Renewed March 30, 1916. Serial No. 87,856.

To all whom it may concern:

Be it known that I, EDWIN R. GILL, a citizen of the United States, residing at Yonkers, in the county of Westchester and State of New York, have invented certain new and useful Improvements in Fire-Extinguishing Apparatus; and I do hereby declare the following to be a full, clear, and exact description of the invention, such as will enable others skilled in the art to which it appertains to make and use the same.

The present invention relates to an improved form of device for projecting liquids particularly useful as light, portable fire extinguishing means of the type adapted to be placed conveniently at hand for instant use in checking incipient conflagrations. Such instruments are expected to lie dormant for long periods of time without any use, and their structure should be such as to guarantee perfect operation at any moment, in spite of such long periods of idleness. Furthermore these instruments, while light enough to be easily handled by women and children, if necessary, should be powerful enough to project a stream a considerable distance with accuracy, and it is desirable that such stream should be continuous.

The object of my present invention is to provide means of a simple and relatively inexpensive character wherein the above qualifications and advantages are united.

Certain embodiments of my invention are illustrated in the accompanying drawings, wherein Figure 1 is a longitudinal section of one form of my invention, Fig. 2 is an enlarged sectional view of a preferred form of bearing used in said form, Fig. 3 is a view partly in section showing the gear mounting used in Fig. 1, and Fig. 4 is a longitudinal section of a modified form.

A container for suitable fluid, preferably cylindrical, is shown at 10, and is provided with a discharge opening or nozzle 11 having a cross section which is quite small with relation to that of the container. The rear end of the container is closed by a fitting 12, preferably provided with a steadying handle 13 which may be held against the person during use of the instrument. This fitting preferably carries the operating mechanism.

Within the container 10, a tightly fitting plunger 14 is adapted to slide back and forth, the same occupying the entire cross section of the container. A suitable fluid is introduced through an opening normally covered by screw cap 15, and means are provided for pushing the plunger continuously forward, and thus expelling the fluid in a rapid jet or stream through the opening 11.

In Fig. 1 a form is shown wherein this means for pushing the plunger 14 forward, comprises a screw-shaft 16, extending along approximately the center of the container and operated by gearing partly surrounded by the plunger itself. In this form the plunger is substantially dome-shaped and the gear wheels revolve within a space behind the plunger and inside of the fitting 12. The screw-shaft 16 is threaded into the plunger and is keyed into a beveled gear 17 so as to slide longitudinally within the same, the inner end of the screw shaft 16 finding a bearing upon a washer 18 which is carried by balls 19 resting upon the second washer 20 in the bottom of a suitable bearing cavity. Within the cavity formed in the end of the screw shaft 16 is a spring 21 which bears continuously against the washer 18 and holds it against the ball bearing. The pinion 17 is held firmly between the fitting 12 and an arched bracket or abutment 22, so as to prevent longitudinal movement in either direction.

Within a suitable cavity 23 in the fitting, there is placed a second beveled gear 24 which meshes with the gear 17 and is fixed to a rotary shaft 25 having a bearing in the fitting 12 and provided with a crank handle 26 rotating in a plane substantially parallel to the longitudinal axis of the container. Normally the outer end of the crank handle 26 enters a suitable socket 27 which prevents rotation of the handle when the instrument is not in use. When it is desired to use the instrument this socket 27 is slid back into the position shown in full lines in Fig. 1, and the handle 26 can then be turned by means of the knob 28.

I prefer to arrange this device so that when not in use, the discharge opening is tightly closed and so that it is automatically opened at the commencement of operation to discharge the fluid and is automatically closed when the plunger 14 is moved backward.

A preferred means for this purpose comprises a closing plug 29 which is preferably a part of the screw shaft 16 and is formed

to close the opening 11 when pressed forward.

It will be seen that on beginning to turn the handle 26, the beveled gears will turn the screw shaft 16 and at first the friction opposing movement of the plunger 14 will cause this plunger to act as a fixed nut, so that the screw shaft 16 moves backward against the pressure of the spring 21, this movement being permitted by the key which connects the shaft 16 with the beveled gear 17. As soon as the end of the shaft 16 comes down upon the ball bearing shown in Fig. 2, and the opening 11 is thus opened as shown in Fig. 1, further movement of the screw is prevented and the friction of the plunger is overcome so that, on further turning of the handle 26, the plunger is forced forward to expel the fluid. A contrary movement of the screw shaft closes the opening 11, as soon as the movement of the handle 26 is reversed. In order to prevent formation of a vacuum which would impede the movement of the plunger 14, I prefer to provide a valve 30 on the plunger, opening only inward, and a valve 31 on the fitting also opening inward.

In the form shown in Fig. 4, the gearing for turning the screw 16 is located under the fitting and not within the space under the plunger 140. In this form, the pinion 170 is fixed by a pin 32 to the shaft 16 and the teeth which cause engagement between the pinions 170 and 24 are deep enough to permit a certain amount of longitudinal movement of the shaft 16 to allow of the automatic opening and closing of the discharge opening in the manner already described with regard to Fig. 1. Otherwise the operation and construction of the form shown in Fig. 4 is practically the same as has already been described.

Various changes may be made in this device without departing from the spirit of my invention, and I do not limit myself to the details herein shown and described.

What I claim is—

1. A fire extinguisher comprising in combination a container having a discharge opening at its forward end, an expelling plunger adapted to slide back and forth within said container, a screw shaft for pushing said plunger and mounted so as to be capable of restricted longitudinal movement relative thereto, a closing plug for the discharge opening mounted on said screw shaft, gearing for turning said shaft, a crank for said gearing adapted to turn in a plane parallel to said screw shaft and steadying means adapted to be pressed against the person during use of the apparatus, subtsantially as described.

2. A fire extinguisher comprising in combination a container having a discharge opening at its forward end, an expelling plunger adapted to slide back and forth within said container, a screw shaft threaded into said plunger and having a plug for closing said discharge opening, a gear keyed upon said shaft so as to permit longitudinal movement thereof, and means for turning said gear comprising a handle adapted to turn continuously, substantially as described.

3. A fire extinguisher comprising in combination, a container having a discharge opening at its forward end, an expelling plunger adapted to slide back and forth within said container, a screw shaft threaded into said plunger and having a plug for closing said discharge opening, a beveled gear keyed upon said shaft so as to permit longitudinal movement thereof, a second beveled gear engaging the first named gear, and a handle for said second gear adapted to turn in a plane substantially parallel to said screw shaft, substantially as described.

4. A fire extinguisher comprising in combination a container having a discharge opening at its forward end, an expelling plunger adapted to slide back and forth within said container, a screw shaft threaded into said plunger and having a plug for closing said discharge opening, a gear keyed upon said shaft so as to permit relative longitudinal movement, a ball bearing for the end of said shaft, a spring adapted to press said ball bearing and shaft apart, and a handle for turning said gear, substantially as described.

5. A fire extinguisher comprising in combination a container having a restricted discharge opening at its forward end, a hollow dome shaped plunger adapted to slide back and forth within said container, a screw shaft for pushing said plunger forward, gearing within said container for turning said screw shaft and adapted to be covered by said piston when drawn back and a revoluble handle for turning said gearing and shaft, substantially as described.

6. A device of the character described, including a container, adapted to hold a liquid and formed with an outlet, a piston movable in the container, a stem mounted to turn in the container and adapted to actuate the piston in either direction, the stem being movable longitudinally in the container, and there being a valve movable with the longitudinal movement of the stem to open or close the said outlet; a spring normally tending to move the stem to a position to seat said valve, means to turn the stem, means to press the spring and cause movement of the stem to unseat said valve, and a stop to limit the rearward movement of the stem after unseating the valve, the continued turning of the stem serving to actuate the piston.

7. A device of the character described, including a container adapted to hold a

liquid and formed with an outlet, a piston movable in the container toward or from the said outlet, a stem mounted to turn and movable in the container to open or close the outlet, a spring normally tending to move the stem to a position to close the outlet, means to turn the stem, the said stem having threaded engagement with the piston and the power of said spring being less than the force necessary to actuate the piston, whereby to cause a rearward movement of the stem relatively to the piston and a compression of the spring, and means to arrest the longitudinal movement of the stem after a compression of the spring and thereby cause the piston to travel.

In testimony whereof, I affix my signature, in presence of two witnesses.

EDWIN R. GILL.

Witnesses:
H. S. MacKaye,
Katharine C. Mead.

Copies of this patent may be obtained for five cents each, by addressing the "Commissioner of Patents. Washington, D. C."