March 31, 1964 W. S. BLUME 3,126,617

METHOD OF PRODUCING PERMANENT MAGNETS

Filed July 27, 1961

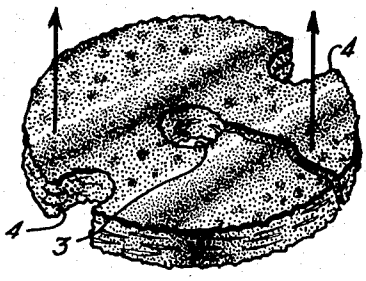

Fig. 1

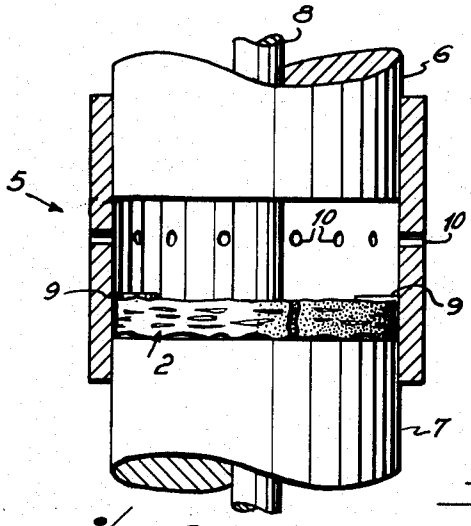

Fig. 2

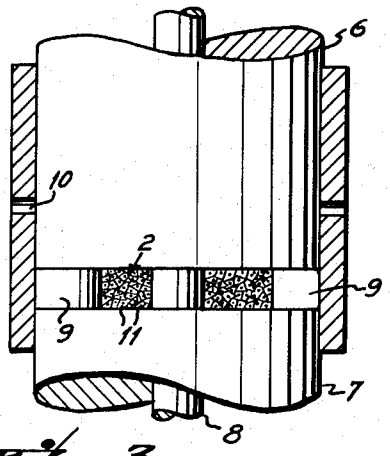

Fig. 3

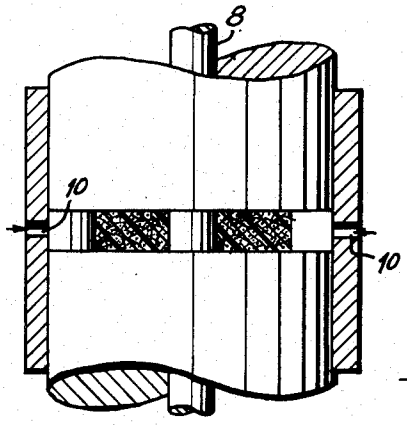

Fig. 4

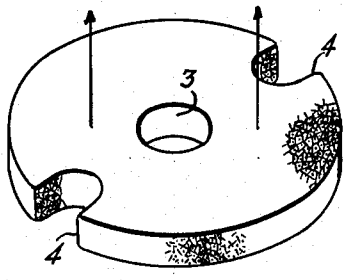

Fig. 5

INVENTOR.
Walter S. Blume
BY
Wood, Herron & Evans
ATTORNEYS

United States Patent Office 3,126,617 Patented Mar. 31, 1964

3,126,617

METHOD OF PRODUCING PERMANENT MAGNETS

Walter S. Blume, Cincinnati, Ohio, assignor to Leyman Corporation, Cincinnati, Ohio, a corporation of Ohio

Filed July 27, 1961, Ser. No. 127,254
7 Claims. (Cl. 29—155.6)

This invention relates to the production of permanent magnets, and more particularly relates to the production of permanent magnets of the so-called sintered fine particle type.

Sintered fine particle magnets are comprised of particles of permanent magnet material which are sintered together in the form of a coherent body. Usually, although not necessarily, the particles are ultrafine in size and are anisotropic, that is, each particle possesses a preferred magnetic axis such that it can be magnetized more easily in the direction of that axis than in other directions. The ferrites of barium, strontium, and lead are well known examples of permanent magnet substances which display such magnetic anisotropy in the form of fine particles. It is also known at attempt to bring the preferred magnetic axes of the particles into parallelness, or to "orient" or "align" them in the jargon of the art, prior to sintering them in permanent relation to each other, so that the sintered product will itself display alignment.

Conventional sintered magnets, particularly those of the ferrite type, are extremely hard and brittle. They cannot be cut or shaped by conventional edge cutting techniques, and can be formed only by grinding or abrading. On account of the refractory nature of the ferrite materials, particles of such materials can be sintered only at extremely high temperatures, and moreover, they must be compacted under high pressure and sintered to form a dense, coherent product. The magnets tend to warp during sintering and, if bulky, tend to crack and break in sintering and cooling. The proportion of rejects is high. It is inherently difficult, if not impossible, to produce sintered magnets to close dimensional tolerances. Close control must be exercised to produce a product having any substantial uniformity. If dimensional accuracy is requisite, the sintered product must be made oversize and then ground to final dimension. The unground surface is rough and is irregular in appearance.

On account of their hard brittle nature, sintered magnets display a pronounced tendency to crack or chip in use. If dropped on a hard surface they almost invariably are damaged.

I have discovered a process whereby sintered magnets may be rendered both dimensionally accurate and less breakable.

Simply put, I have discovered that these desirable qualities may be imparted to conventional sintered magnets, whether aligned or not, by placing the bulk sintered product, even though it may be broken, cracked or warped, in a die slightly larger than the sintered product and having the shape and size of the desired product, subjecting the sintered product in the die to compression forces sufficient to cause the sintered product to rupture, fracture or shatter into a great plurality of small bits, e.g., of the order of 1/64 to 1/8 inch in size, holding the bits in immobilized condition in the die and introducing a hardenable liquid binder into the voids of the shattered body, and hardening the binder to cohere the shattered body in dimensionally accurate and unbreakable form.

Surprisingly, this shattering of the original coherent sintered body into bits and the subsequent impregnation of the shattered body with a binder is accompanied by very little degradation of the magnetic properties of the

original sintered product. The magnetic density of the product, that is, the weight of magnetic material per unit volume, is somewhat reduced, for example by about 5% in a typical instance, since the shattered body occupies slightly more space than the sintered product. More surprisingly, however, the alignment of the product is found not to be measurably affected. Apparently, as a result of the shattering process the bits move slightly apart from each other translationally but are not rotated or disaligned to any great degree. If the original sintered product is of the unaligned type, the shattering step of course does not align it, but if it is originally aligned, the shattering process does not appreciably disalign it. For example, if a sintered product which is 70% aligned is subjected to the process I have discovered, the final product will be aligned to approximately the same extent.

In shattering, the sintered product is not reduced to the original particles from which it was made. As previously explained, most sintered products are made of ultrafine particles, which may be of the order of ½ to 20 microns in size. The pieces or bits into which the sintered product shatters are substantially larger, e.g. 1/64 to 1/8 inch, although the size of the bits is in no sense critical. As the bits move slightly apart when the sintered product is cracked, they completely fill the slightly larger die in which they are enclosed, even though the sintered product itself did not. After having been shattered, the body is kept confined in the die in which the cracking step was effected. The binder, which may be any hardenable liquid or flowable non-magnetic material, is then introduced into the die to fill the voids and cracks between the bits, and is caused to cure or harden to immobilize them into an integral solid mass. Suitable binder materials include, but are not limited to, thermosetting or thermoplastic resins, lead and aluminum.

The increase in volume of the product due to shattering is not large, e.g. about 1–8%, and the quantity of binder necessary to fill the resultant voids and cracks is also small. Nonetheless, the binder does effectively cohere the shattered body and, moreover, conforms exactly to the shape of the die in which the process takes place, so that the hardened product displays dimensions which accurately conform to those of the die.

Introducing the binder into the shattered body has been found to have no substantial disaligning effect on the individual pieces of which the body is comprised, which are maintained by the die substantially in their existing relationships as the binder is introduced in and around them. The specific method of hardening or curing the binder will depend on the particular binder which is actually employed; a thermosetting resin, for example, is heated to setting temperature and allowed to set in the die, whereas a thermoplastic liquid would be cooled to harden it.

The invention may best be further explained in relation to the drawings, in which:

FIGURE 1 is a perspective view of a sintered magnet produced in accordance with conventional techniques and having the form of a generally circular disk which displays alignment in the direction normal to its surface;

FIGURE 2 is a vertical cross section through a die in which sintered product such as that shown in FIGURE 1 has been placed preparatory to crushing;

FIGURE 3 is a vertical cross section similar to FIGURE 2 but shows the sintered product being compressed to crush or shatter it into small bits;

FIGURE 4 is a vertical cross section similar to FIGURE 3 but shows the binder being introduced into the

shattered body through inlets provided for that purpose in the die; and

FIGURE 5 is a perspective view of the completed product, which displays alignment in the direction normal to its surface.

In carrying out the process which I have discovered to produce magnets to close dimensional tolerances, it is contemplated that the initial sintered product will be formed to a size slightly smaller than the desired size of the finished magnet, so that the slight increase in dimension which accompanies the shattering step will bring the product to approximately the correct size. The binder introduced into and around the shattered body will then conform exactly to the shape of the die in which the process is effected.

For example, if it is desired that the final product be in the form of a circular disk 1" in diameter and ¼" thick, it is preferred to form the initial sintered product roughly to somewhat smaller cross sectional dimensions. It is in no sense necessary that the sintered product be accurately formed, for indeed much of the significance of the present invention lies in the fact that it obviates the need for accurate shaping of the initial product. Production of the original sintered product itself is not a part of the present invention, and may be effected in any suitable manner.

A sintered magnet produced in accordance with conventional techniques is shown in FIGURE 1 and is designated by the numeral **2**. The magnet **2** illustrated is of a typical commercial type and is generally in the shape of a circular disk having a central opening **3** and diametrically opposed peripheral notches **4**. As previously mentioned, one of the advantages of the present process is that it is adapted to convert sintered magnets which themselves are rejects by reason of being cracked, warped or broken, into final products of high quality. The magnet shown in FIGURE 1 is warped, cracked, and displays stratification, and would ordinarily be classed as a reject unsatisfactory for commercial use. In spite of such defects, even magnets of the poor quality shown in FIGURE 1 are suitable as the starting material for the present process.

As shown in FIGURE 2, the sintered product **2** is placed in a die **5** having a cavity which is slightly larger in cross sectional size, as previously explained, and corresponds to the desired size of the final product which is to be produced. The die **5** is fitted with a pair of relatively movable punches **6** and **7** to which suitable pressure may be applied, for example, by a hydraulic press not shown. A core member **8** extends through the opening **3** in the center of the magnet **2**, and one of the dies **7** is provided with raised portions **9, 9** appropriately configurated for the desired shape of the notches **4, 4**. The die is provided with a series of ports **10** through which a binder may subsequently be introduced, as will be explained.

The punches **6** and **7** are pressed into contact with the magnet **2** with force sufficient to cause the magnet to be completely shattered or crushed into small irregular fragments **11**, as shown in FIGURE 3. (The size and shape of the fragments **11** shown in the drawing is diagrammatic, and does not represent their actual size or shape.) Normally a pressure of 70,000 p.s.i. or more is required to effect crushing, but this will vary depending on the parameters of the specific sintered magnet. It is preferred that the crushing be effected at a position in the die which is removed from the ports **10**, so that the bits **11** cannot move into the ports.

The magnet usually tends to break into a great many small pieces, although this again depends on the nature of the material. In any event, sufficient pressure should be applied to crush it into small fragments, for example of roughly 1/16 inch in size, although the bits will range considerably in size and shape being in this regard somewhat similar to the fragments which are formed when

glass or tile is crushed. Crushing is indicated by a sudden drop in indicated pressure, and the pressure may be reapplied if necessary to achieve proper shattering.

The fragments **11** substantially completely fill the available space between the punches **6** and **7**, although the sintered magnet itself did not.

The punches are then raised up to the inlet ports **10**, as shown in FIGURE 4, the fragments **11** being kept immobile between them as this is done. A hardenable liquid binder is introduced in and around the bits **11** through the orifices **10** provided for that purpose in the die. One specific example of a suitable binder is polyvinyl chloride. The particles are maintained in their relative positions in the die as the binder is introduced and hardened around them. The binder is set in the appropriate manner, which will depend on its specific nature. A final coining operation at moderate pressure, e.g. 5,000–10,000 p.s.i., may follow the impregnation step.

The final product is shown in FIGURE 5. It has a smooth surface, since the binder hardens in conformity with the surface of the die, even though the individual bits **11** do not exactly do so. In addition to being dimensionally accurate, it is quite durable and can be handled and used without chipping or breaking. Assuming that the original magnet was aligned in the direction normal to its surface as indicated by the arrows in FIGURE 1, so also will the final product display alignment in the same direction, as indicated in FIGURE 5.

As an incident to the shattering process, the various defects of the original magnet **2** are removed, because the shattered body is forced to conform closely to the shape of the die cavity. The crack is removed, as is the warpage and the layering.

While the present process has been referred to herein as a process for making a permanent magnet, it might more properly be described as a process for making a material which is capable of being magnetized to convert it into a permanent magnet, since actual magnetization is not a necessary step of the process. The sintered magnet need not be magnetized, and in fact preferably is not magnetized prior to the process. Magnetization may be effected by the producer of the material in accordance with the present process, or may be performed by the purchaser of such material.

The process I have discovered is adapted to be practiced in the production of magnets of a wide variety of sizes and shapes. While I have disclosed a preferred embodiment of the process herein, the invention is not limited thereto but includes other embodiments and modifications within the spirit and terms of the claims which follow.

Having described my invention, I claim:

1. The method of making a permanent magnet which comprises, disposing a sintered aligned fine particle magnet in a die, said die being slightly larger in size than said sintered magnet, subjecting the magnet in said die to crushing force whereby said sintered magnet is crushed into small bits much smaller than the original magnet but larger than domain size, said magnet after crushing occupying a volume slightly larger than its volume prior to crushing and corresponding to the available volume of the die and conforming in overall shape to the shape of said die, holding said bits immobile in said die to preserve alignment of said particles while introducing a hardenable liquid binder into the voids between said bits in said die, and hardening said binder whereby said binder coheres said bits into a solid durable body having the dimensions of said die.

2. The method of making a permanent magnet which comprises, disposing a sintered aligned fine particle magnet in a die, said die being slightly larger in size than said sintered magnet, exerting force on said sintered magnet in said die to cause said magnet to break into small bits of the order of roughly about 1/8 to 1/64 inch in diameter, the apparent volume occupied by said bits being slightly larger than the volume occupied by said sintered magnet and

corresponding to the available volume of said die, maintaining said bits in said die under sufficient pressure to preserve their alignment while introducing a hardenable liquid binder around said bits, and hardening said binder to cohere said bits into a durable integral magnet having the shape and size of said die.

3. The method of claim 2 wherein the pressure applied to crush said sintered magnet is at least about 70,000 pounds per square inch.

4. The method of claim 2 wherein said binder is selected from the class consisting of thermoplastic and thermosetting resins.

5. The method of claim 2 wherein said binder is a nonmagnetic metal.

6. The method of claim 2 wherein the size of said die is about 1–8% larger than the size of said sintered magnet.

7. The method of improving the dimensional accuracy and durability of an aligned sintered magnet which comprises, subjecting said sintered magnet to crushing force in a die about 1–10% larger than said sintered magnet and corresponding in shape to the shape of said sintered magnet, whereby said sintered magnet is crushed into particles roughly about 1/64 to 1/8 inch in size, maintaining said particles in said die immobilized under pressure to preserve their alignment while introducing a hardenable plastic binder between and around said particles in said die and hardening said binder in said die, whereby the alignment of said magnet is preserved and whereby dimensions of said magnet are caused to closely conform to the dimensions of said die.

References Cited in the file of this patent

UNITED STATES PATENTS

2,376,706	Lum	May 22, 1945
2,630,383	Schwartz et al.	Mar. 3, 1953
2,964,793	Blume	Dec. 20, 1960