Jan. 19, 1932. J. DAVIS 1,841,588

PAGE SIGNAL FOR TYPEWRITERS

Filed May 21, 1928 2 Sheets-Sheet 1

Fig. 1.

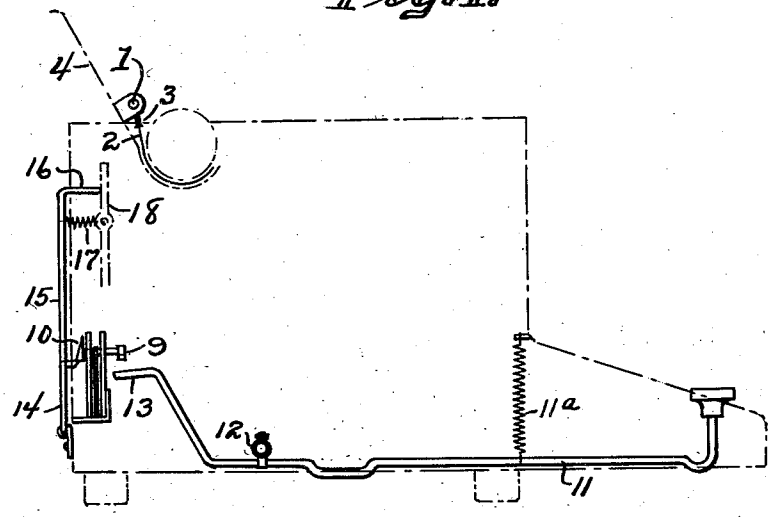

Fig. 2.

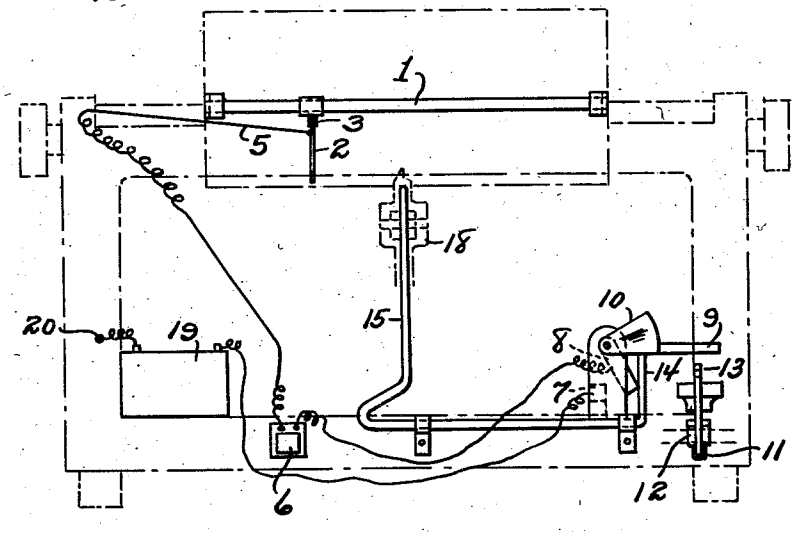

Jim Davis
INVENTOR

BY Victor J. Evans
ATTORNEY

WITNESS: John Brennan

Jan. 19, 1932. J. DAVIS 1,841,588

PAGE SIGNAL FOR TYPEWRITERS

Filed May 21, 1928 2 Sheets-Sheet 2

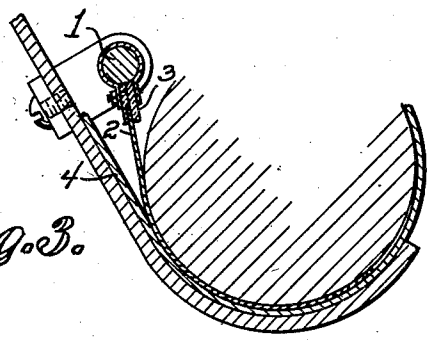

Fig. 3.

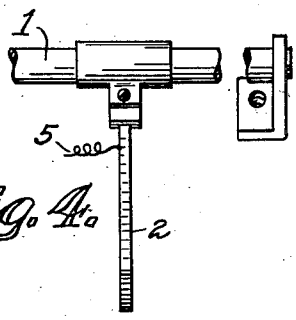

Fig. 4.

Fig. 5.

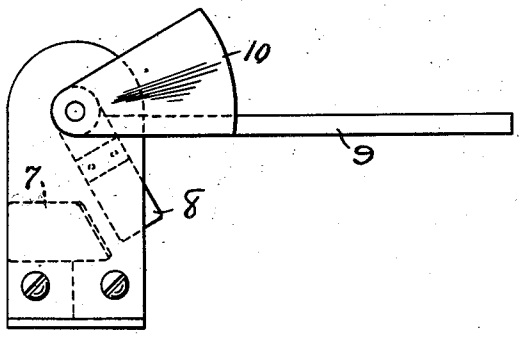

Fig. 6.

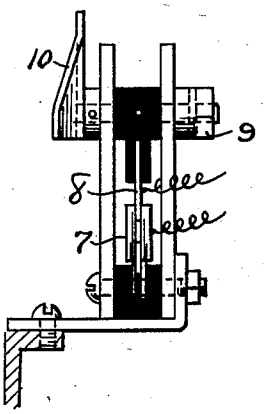

Fig. 7.

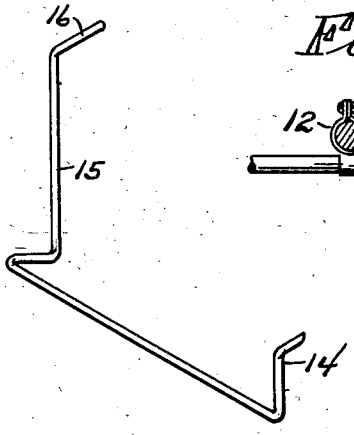

Fig. 8.

Fig. 9.



Jim Davis

INVENTOR

BY Victor J. Evans

ATTORNEY

WITNESS: John Donovan

Patented Jan. 19, 1932 1,841,588

UNITED STATES PATENT OFFICE

JIM DAVIS, OF JOPLIN, MISSOURI

PAGE SIGNAL FOR TYPEWRITERS

Application filed May 21, 1928. Serial No. 279,561.

This invention relates to signals for typewriter sheets. In operating a typewriter the typist very often shifts the paper carrying the type matter when the bottom of the sheet has been shifted out of alinement with the striking ends of the type, thereby leaving a smudge of ink on the rubber platen roller as well as effecting a loss of time on the part of the operator. The present invention is designed to avoid this difficulty by mounting a signal device on the machine which calls the attention of the operator to the fact that the end of the sheet has been reached and that a new sheet should be introduced into the machine.

In carrying out the invention I mount on the machine over the paper, a signaling device preferably one producing an audible alarm as by an electric vibrator, the signal being effected by a spring actuated circuit closer, the two contacts of which are automatically brought together when the end of the paper sheet has been shifted to the final recording line. When the paper is placed in the carriage it holds open the contacts, thereby preventing the vibrator operating so long as the contacts have the paper film between them, and when the paper has been shifted to bring the sheet out of alinement with the striking end of the type bars it will no longer intervene between the parts of the circuit closer to hold them open and prevent contact, thereby closing the circuit and operating the vibrator.

In order to keep the vibrator from action when the paper is not in place, as in the normal condition of the machine, by which an alarm would be in the operating room as well as exhausting the energy of the source of electromotive force or battery, I provide an auxiliary switch in series relation to the vibrator circuit by which it may be kept closed when the operator is writing, and latched by the escapement of the carriage. The auxiliary key opens the gravitative auxiliary switch and latches it in open position and the escapement of the typewriter recloses it in order that when the end of the page is reached, the circuit closer controlled by the paper and held open thereby passes out of contact with the paper and its two contacts come together to actuate the alarm.

My invention therefore comprises a signal depending upon the introduction of paper in a typewriter actuated by the transit of the paper out of register with the types to indicate that a new sheet must be introduced. It comprises also an audible alarm in the form of a vibrator controlled by a circuit closer, the two contacts of which are separated on introduction of a paper sheet.

It comprises also other specific features, the novelty of which will be hereinafter described and will be definitely indicated in the appended claims.

Referring now in detail to the drawings—

Figure 1 is an elevation illustrating the application of my device to a standard typewriter.

Figure 2 is a side elevation partly diagrammatic of the invention—

Figure 3 is a sectional detail of the circuit closer controlled by the paper film—

Figure 4 is a front view of the circuit closer shown in Figure 3.

Figure 5 is an elevation of an auxiliary switch—

Figure 6 is an end view of the switch shown in Figure 5—

Figure 7 is an isometric view of the escapement controller—

Figure 8 is a sectional view of a mounting clamp for an auxiliary key—

Figure 9 is a front view of the clamp of Figure 8.

Referring now in particular to the drawings—Figures 1 and 2 represent in dotted lines the outline of the parts of a standard machine, the full lines indicating the attached parts constituting my invention—1 repre-

sents a rod mounted on the paper guide of the carriage supported in a pair of brackets. A curved metallic strip 2 is mounted in a fibre support attached to the rod 1. The paper guide 4 forms an arched segment enclosing the lower portion of the cylindrical type platen which is the usual construction found on standard machines. My insulated arm 2 conforms in shape to this arched paper guide, and is formed of a piece of elastic spring metal, normally tending to form a contact with the bottom of a paper support 4, but when a sheet of paper is introduced between platen and the paper guide the elastic blades are separated by the insulating film of paper. The insulated strip 2 is connected with a wire 5 in circuit with a buzzer 6, and an auxiliary switch pivoted in a bracket on the base of the machine having a circuit closing arm 8 and a weighted arm 9, tending to shift it normally into engagement with a cooperating contact formed by two blades 7, by which a wire connection is made with a binding post of a source of electric motive force as a battery 19, grounded on the machine at 20. An auxiliary key 11 controlled by a tension spring 11*a* is mounted by a clip 12, on a rod 11′ at the base of the machine and when the key is depressed the key raises the arm 13 and shifts the switch arm 9 to open relation to the contact 7. A spring 17 normally maintains a rod 16 in engagement with escapement 18 of the typewriter; this rod is mounted rotatably on the base of the typewriter in a pair of brackets and carries an angular arm 14 having a right-angled bend in its top to latch the cam 10 and hold the switch in open position, but when the typewriter is in action the movement of the escapement lever 18 rocks the arm 15 thereby disengaging the latch arm 14 and permitting the arm 9 to depress the switch into closed relation by the weight of the arm.

In operation, a sheet of paper is inserted in the typewriter in the ordinary manner and breaks the circuit to the alarm 6 by spacing the contact strip 2 from the paper support 4 of the typewriter, it being understood at this time the switch 8 is disengaged from the contacts 7 and held in this position by the end 14 of the rod 15 engaging under the lower edge of the cam 10, which edge is offset laterally of the opposite edge of said cam. The first operation of any one of the keys or spacing bar of the typewriter causes the rod 15 to be rocked by the escapement 18 of the typewriter which disengages the end 14 of said rod 15 from the lower edge of the cam 10, freeing the switch 8 and the latter gravitates to circuit closing position or in engagement with the contacts 7 under the weight of the cam and arm 9. The end 14 of the rod 15 is then disposed opposite the outer face and adjacent the upper edge of the cam which permits the rod 15 to rock freely under the influence of the escapement 18. When the sheet of paper has been fed through the typewriter or the entire surface of the paper typed on, the paper has moved from between the strip 2 and the paper holder 4 and the strip 2 engages the holder 4 completing the circuit to the alarm warning the operator against further use of the typewriter until another piece of paper has been placed therein. To stop the alarm, the operator presses the key 11 which raises the arm 9 through the arm 13 and disengages the switch 8 from the contacts 7 and simultaneously positions the cam 10 that the end 14 of the rod 15 engages under the lower edge of the cam and supports the switch 8 in circuit breaking position. The device is then ready for further operation in the manner heretofore described.

Having thus described my invention, what I claim is new and desire to secure by Letters Patent is:—

1. A signal for typewriters including a circuit closing means controlled by the paper in a typewriter and an alarm in circuit with said means and electrical source, spaced contacts electrically connected to the electrical source and the alarm, a gravity actuated switch for bridging said contacts, an arm movable with the switch, a cam carried by the arm, means to engage the cam for holding the switch in a position to disengage the contacts and actuated by the escapement of the typewriter to free said switch and permit the latter to gravitate into engagement with the contacts, and means under the control of the operator to disengage the switch from the contacts and simultaneously position the cam to be engaged by said second means to support the switch in an elevated position.

2. A switch for typewriters including a circuit closing means controlled by the paper in a typewriter and an alarm in circuit with said means and an electrical source, spaced contacts electrically connected to the electrical source and the alarm, a gravity actuated switch for bridging said contacts, an arm movable with the switch, a cam carried by the arm, a pivoted rod having angularly related arms and one of said arms to engage the cam for holding the switch in a position to disengage the contacts and the other arm to be engaged by the escapement of the typewriter to free the switch and permit the latter to gravitate into engagement with the contacts, and means under the control of the operator to disengage the switch from the contacts and simultaneously position the cam to be engaged by one of the arms of said rod to support the switch in an elevated position.

3. A signal for typewriters including a circuit closing means controlled by the paper in a typewriter and an alarm in circuit with said means and an electrical source, spaced contacts electrically connected to the electrical source and the alarm, a gravity actuated

switch for bridging said contacts, an arm movable with the switch, a cam carried by the arm, a pivoted rod having angularly related arms and one of said arms to engage the cam for holding the switch in a position to disengage the contacts and the other arm thereof to be engaged by the escapement of the typewriter to free the switch and permit the latter to gravitate into engagement with the contacts, and a pivoted rod having an angularly related portion disposed adjacent the first arm, and a key carried by the other end of the last mentioned rod to be actuated to disengage the switch from the contacts and position the cam to be engaged by one of the arms of the first mentioned rod for supporting the switch in an elevated position.

In testimony whereof I, affix my signature.

JIM DAVIS.