(No Model.)

5 Sheets—Sheet 1.

D. S. FISHER.

CORN HARVESTER.

No. 456,511. Patented July 21, 1891.

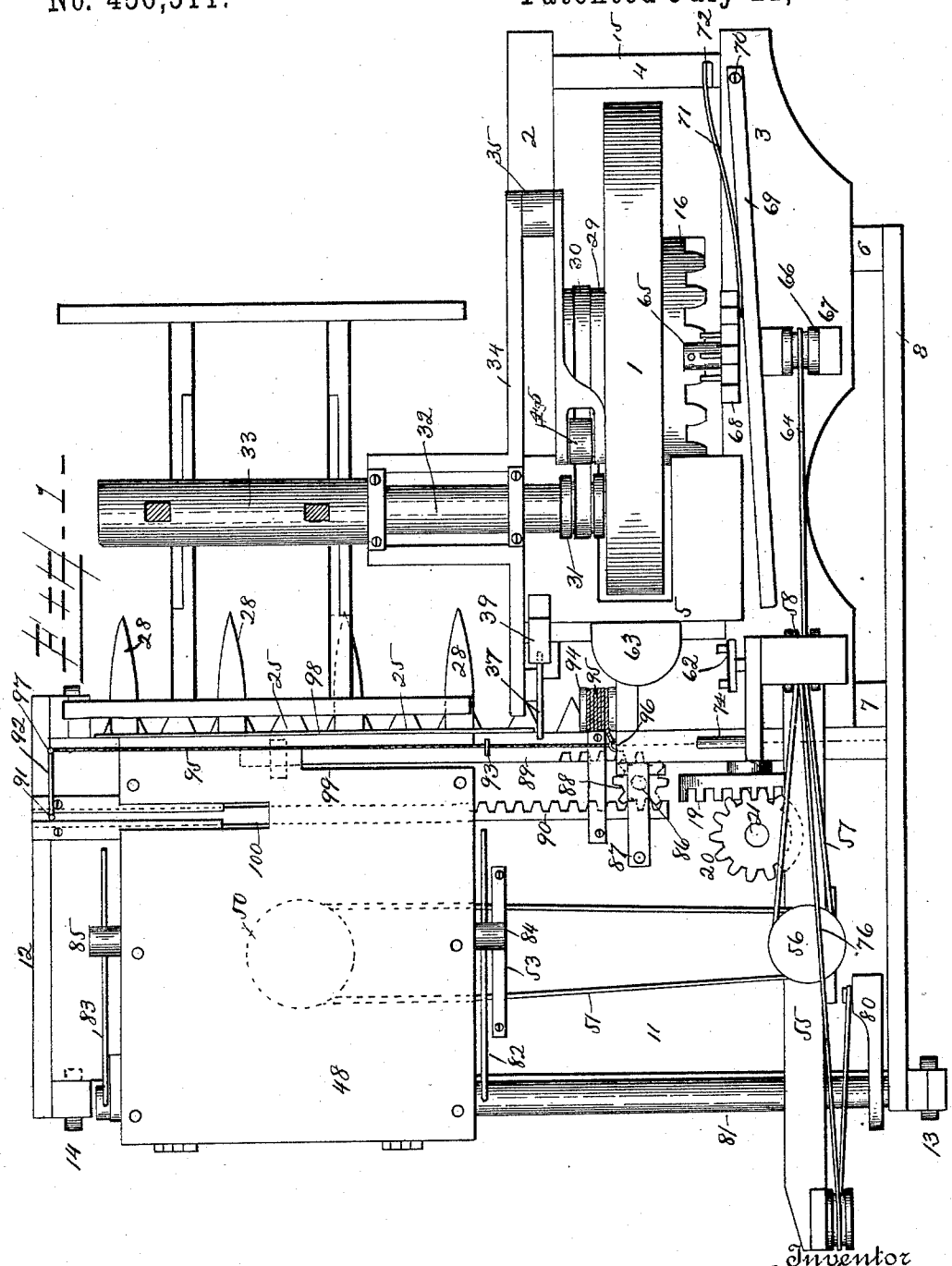

Witnesses
Albert B. Blackwood
Jos. A. Blackwood

Inventor
David S. Fisher
Geo. P. Thurston
Attorney

THE NORRIS PETERS CO., PHOTO-LITHO., WASHINGTON, D. C.

(No Model.) 5 Sheets—Sheet 2.

D. S. FISHER.

CORN HARVESTER.

No. 456,511. Patented July 21, 1891.

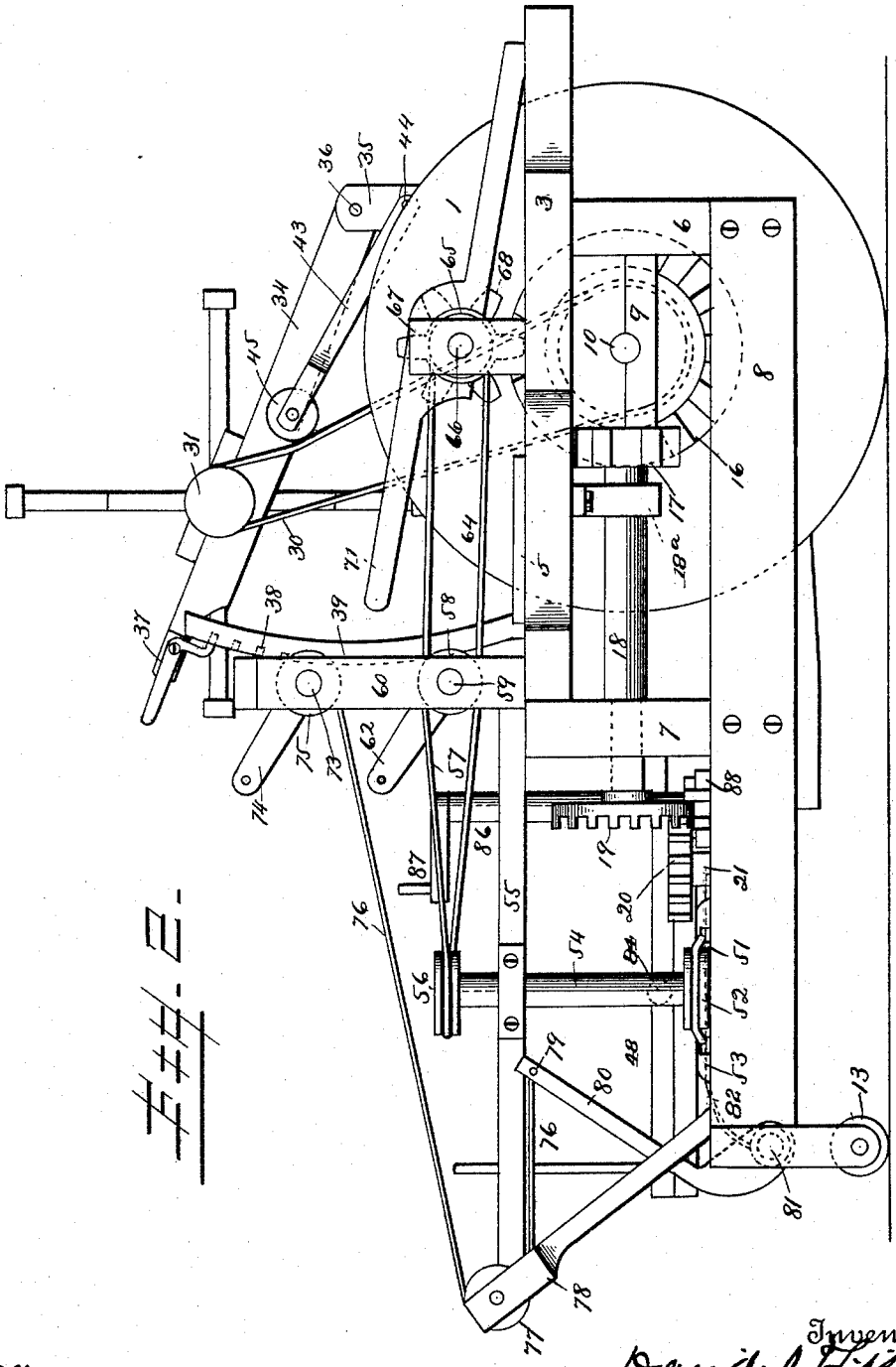

Fig. 2.

Witnesses
Albert. B. Blackwood
Jos. H. Blackwood

Inventor
David S. Fisher
Geo. B. Schroeder
Attorney

THE NORRIS PETERS CO., PHOTO-LITHO., WASHINGTON, D. C.

(No Model.) 5 Sheets—Sheet 3.

D. S. FISHER.

CORN HARVESTER.

No. 456,511 Patented July 21, 1891.

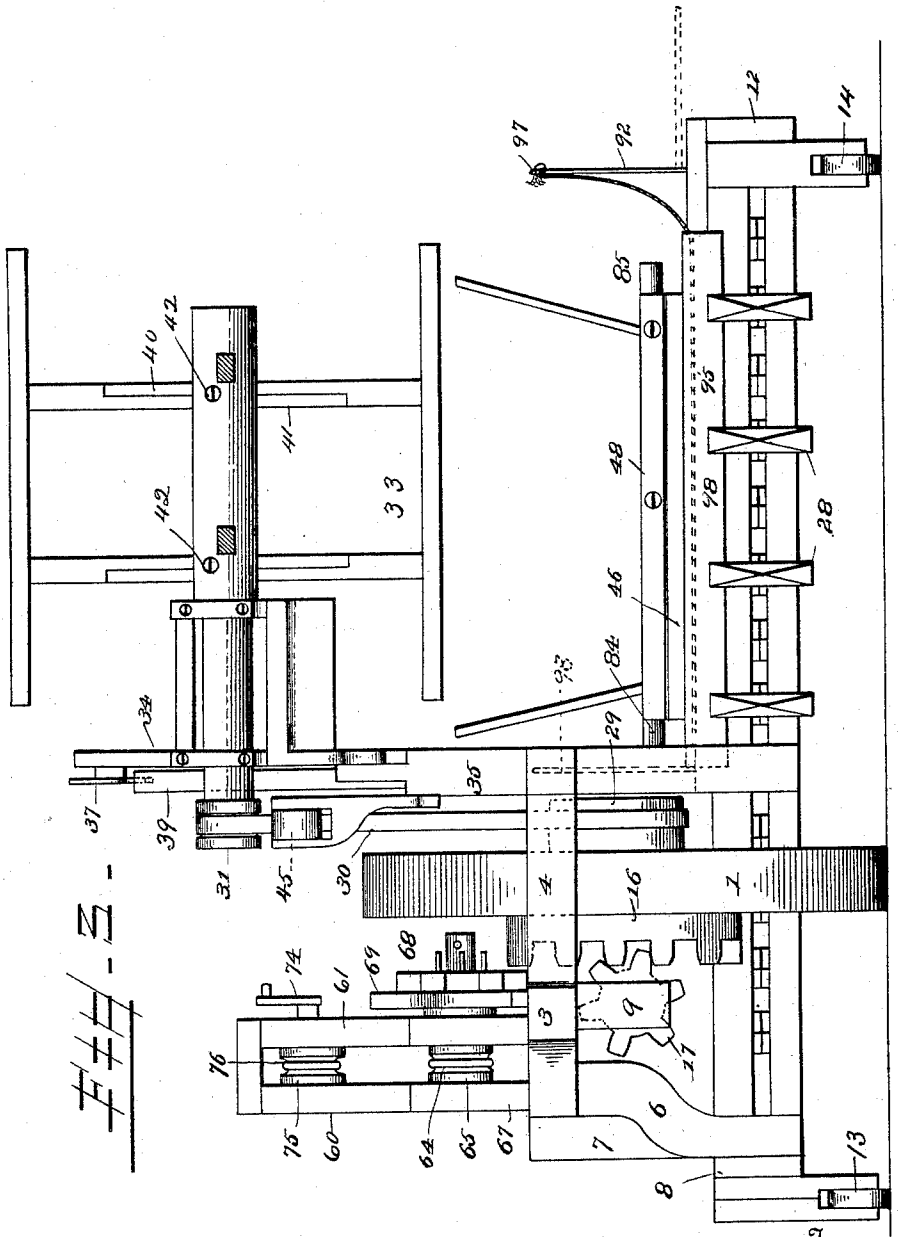

Witnesses
Albert B. Blackwood
Jos. A. Blackwood

Inventor
David S. Fisher
By Geo. P. Graves
Attorney

THE NORRIS PETERS CO., PHOTO-LITHO., WASHINGTON, D. C.

(No Model.) 5 Sheets—Sheet 4.

D. S. FISHER.

CORN HARVESTER.

No. 456,511. Patented July 21, 1891.

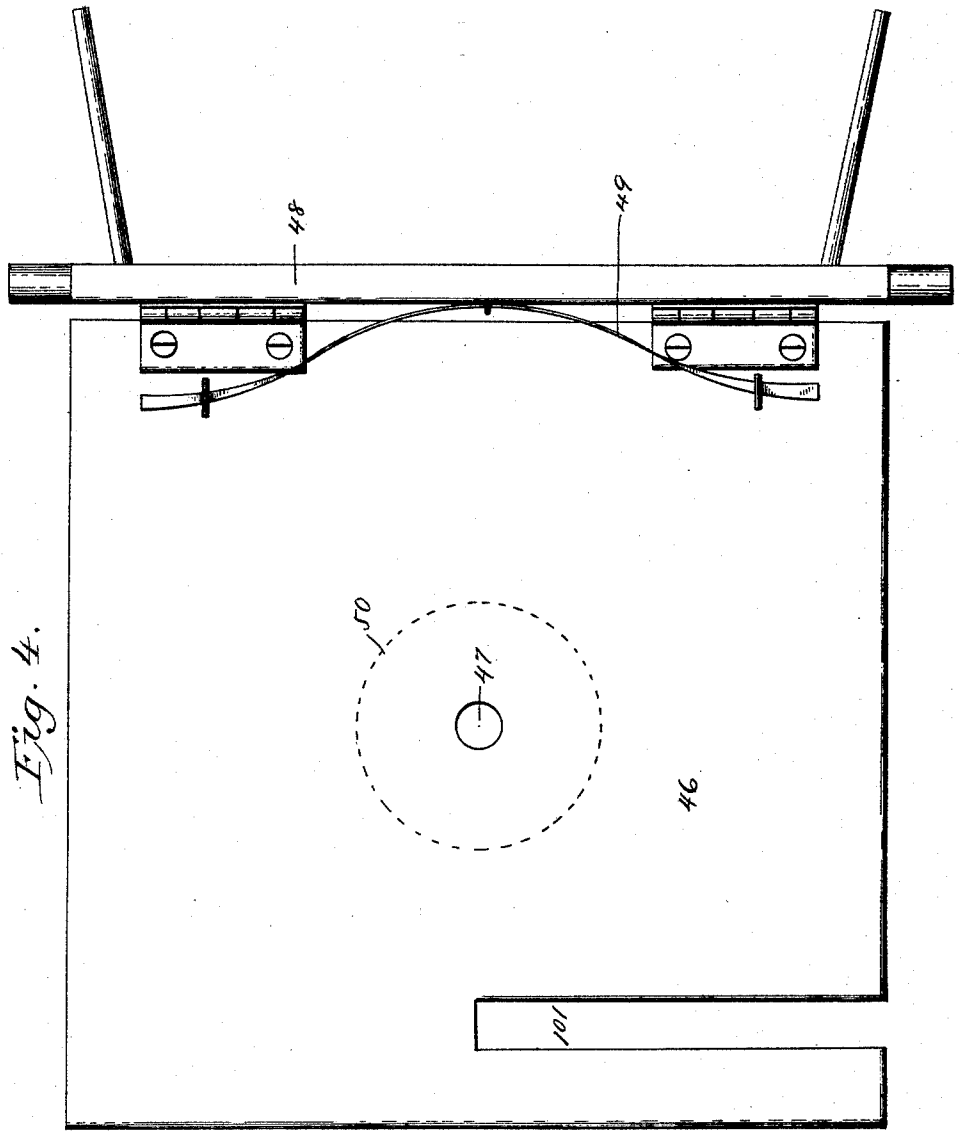

Fig. 4.

Witnesses
Albert. B. Blackwood
Jos. H. Blackwood

Inventor
David S. Fisher
By
Geo. Schroeder
Attorney

THE NORRIS PETERS CO., PHOTO-LITHO., WASHINGTON, D. C.

(No Model.) 5 Sheets—Sheet 5.

D. S. FISHER.

CORN HARVESTER.

No. 456,511. Patented July 21, 1891.

Fig. 5.

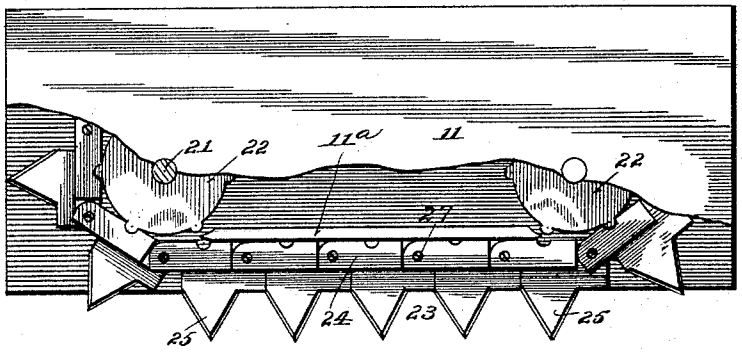

Fig. 6.

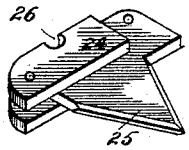

Fig. 7.

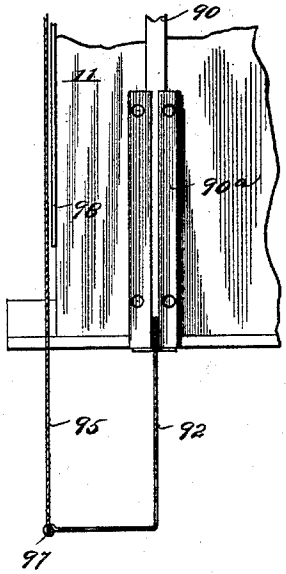

Fig. 9.

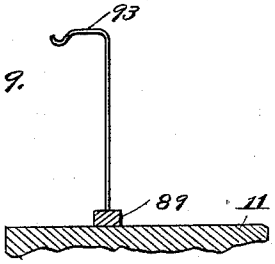

Fig. 8.

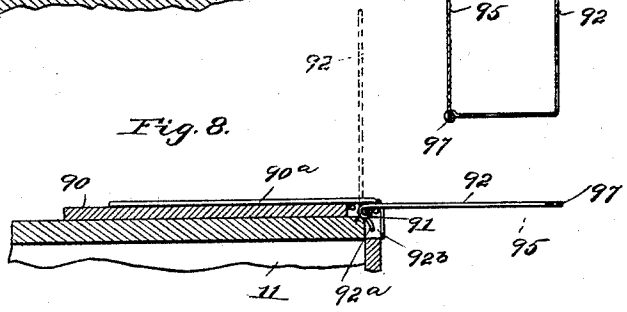

Witnesses:
Harry S. Rohrer
William E. Knight

Inventor:
David S. Fisher.
By Knight Bros.
Attorneys.

THE NORRIS PETERS CO., PHOTO-LITHO., WASHINGTON, D. C.

UNITED STATES PATENT OFFICE.

DAVID S. FISHER, OF VALLEY CITY, ASSIGNOR OF ONE-HALF TO JAMES L. MORRIS, OF CORYDON, INDIANA.

CORN-HARVESTER.

SPECIFICATION forming part of Letters Patent No. 456,511, dated July 21, 1891.

Application filed September 5, 1890. Serial No. 364,057. (No model.)

To all whom it may concern:

Be it known that I, DAVID S. FISHER, a citizen of the United States, residing at Valley City, in the county of Harrison and State of Indiana, have invented certain new and useful Improvements in Corn-Harvesters; and I do declare the following to be a full, clear, and exact description of the invention, such as will enable others skilled in the art to which it appertains to make and use the same, reference being had to the accompanying drawings, and to the figures of reference marked thereon, which form a part of this specification.

My invention is in the nature of a machine for harvesting corn, by means of which the corn is cut, tied, and shocked on end, the same as it is done by hand; and my invention consists in the improved construction, arrangement, and combination of parts hereinafter fully described, and afterward specifically pointed out in the claims.

In the accompanying drawings, Figure 1 is a top plan view of my machine. Fig. 2 is a view in elevation of the right-hand side of the machine. Fig. 3 is a view in elevation of the front of the machine. Fig. 4 is a top plan view of the revolving table with the hinged leaf raised in the position it assumes in dropping off the tied-up shock of corn. Fig. 5 is a plan view of the sickle-chest, part being broken away to show the internal arrangement of parts. Fig. 6 shows in detail the construction of the sickle-sections. Figs. 7 and 8 show in detail plan and section the construction of the binder-arm 92. Fig. 9 is a detail view of binder-arm 93.

Like numerals of reference mark the same parts wherever they occur in the various figures of the drawings.

Referring to the drawings, 1 is the driving-wheel mounted upon a suitable transverse shaft 10, which is journaled in the frame-work. This frame-work consists, principally, of longitudinal beams 2 and 3, cross-beams 4 and 5, and uprights 6 and 7, depending from the longitudinal beam 3 and supporting a lower longitudinal beam 8.

9 is a journal-box attached to the under side of beam 3 and in which one end of the shaft 10 of the driving-wheel 1 has its bearing. The other end of the shaft 10 has its bearing in a similar journal-box attached to the under side of longitudinal beam 2. The longitudinal beam 8 extends rearwardly beyond that portion of the machine in which the driving mechanism works and beyond the upright 7, serving as a support for one end of the sickle-chest 11.

12 is an end piece removably attached to the sickle-chest.

The two rear corners of the machine are supported on the ground by wheels 13 and 14, the wheel 14 being located near the rear end of the removable piece 12 of the sickle-chest 11.

The machine will be drawn by horses or other animals attached in any well-known manner at the point 15 directly in front of the driving-wheel, so as to give a central draft.

Attached to one side of the driving-wheel 1 is a crown-gear 16, which meshes with a cog-wheel 17 on a shaft 18, which is supported at right angles to the shaft 10 and in the same plane therewith. The shaft 18 is journaled at its forward end, just inside of the cog-wheel 17, in a journal-box 18^a, depending from the longitudinal beam 3, and at its rear end in a bearing projecting from the frame-piece 7. On the rear end of this shaft 18 is mounted a crown-wheel 19, which engages a gear-wheel 20 on an upright shaft 21, having its bearings in the sickle-chest 11.

Within the sickle-chest 11, at each end thereof, is a sprocket-wheel mounted upon suitable shafts having bearing in the casing, one of said shafts being a continuation of shaft 21.

23 is an endless belt of knives or sickle-sections supported between the sprocket-wheels 22 and adapted to be rotated thereby. The sickle-chest has the customary guide-piece 11^a near its forward edge to keep the sickles to their work. This endless belt of sickles 23 is composed of a number of individual sections 24, each having on its rear side a notch 26, with which the sprocket-wheels engage, and on its forward side a knife 25, sharpened on both edges. These sections 24 are hinged together by means of countersunk screws 27, and may thereby be readily taken apart for purposes of sharpening or repairing. The teeth 25 operate through guard-fingers 28 in the manner well known in harvesters.

The endless belt of sickles is adapted to move in one direction only, and the knives

are sharpened on both edges, so that they may be made interchangeable when one edge becomes dull or for other reasons inoperative. (See Figs. 5 and 6 for the arrangement and construction of the sickle-chest and sickles.)

On the opposite side of the driving-wheel 1 is secured a belt-pulley 29, which turns with the driving-wheel, and through the medium of a belt 30 drives a pulley 31, mounted on the inner end of a shaft 32, which carries at its outer end the reel 33. This reel-shaft 32 is supported in bearings in a frame 34, hinged to an upright 35, supported by longitudinal beam 2. The reel is adjustable vertically by moving its supporting-frame 34 on its pivot 36, said frame being held in any adjusted position by an angular lock-bolt 37, pivoted to its rear end and engaging in notches 38 in a curved upright 39, rising from the rear end of the longitudinal beam 2. The spokes of the reel 40 and 41 move upon each other, and are thus radially adjustable, being held in their adjusted positions by set-screws 42. To prevent slackness of the reel-driving belt 30 by reason of the adjustment of the frame 34 on its pivot, an automatic belt-tightener is provided, consisting of an arm 43, pivoted at 44 to the upright 35 and having in its rear end an anti-friction wheel 45, which by its gravity is kept continually in contact with said belt 30, as clearly shown in Fig. 2.

46 is a revolving table mounted on an upright 47, (see Fig. 4,) having its bearing in the sickle-chest 11 and provided with a hinged leaf 48, the two leaves being connected by a spring 49, whose normal tendency is to cause the hinged leaf to lie down upon the table 46 in the position shown in Fig. 1.

On the shaft 47 below the table 46 is mounted a pulley or cog 50, (shown in dotted lines in Figs. 1 and 4,) which is driven by a belt or chain 51, which at its opposite end passes around a pulley or cog 52, being prevented from spreading or slipping off its pulleys or cogs by passing under a bracket 53, secured to the top of a sickle-chest 11. The pulley or cog 52 is mounted on an upright shaft 54, having its bottom bearing in the sickle-chest 11 and an upper bearing in a longitudinal beam 55, projecting rearward from longitudinal beam 3. On its upper end the shaft 54 has a cog or pulley 56, driven by a belt or chain 57 from a cog or pulley 58 on a longitudinal shaft 59, having its bearings in uprights 60 and 61, supported near the rear end of longitudinal beam 3. On the inner end this shaft 59 is provided with a crank 62, within easy reach of the driver when he occupies the seat 63. The pulley 58 is double-grooved or double-toothed, and carries also beside belt 57 a belt 64, leading from a pulley 65, mounted on a shaft 66, having bearings in upright 67, secured to longitudinal beam 3. This shaft 66 extends inward beyond its bearings in upright 67 and carries a loose cog 68, which may be caused to engage with crown-wheel 16, when desired, by a shifter 69, pivoted at 70 to the longitudinal beam 3, being held normally out of gear by means of a spring 71, secured at 72 to the cross-beam 4.

In the upper portion of the upright 60 and 61 is mounted a shaft 73, carrying at its inner end a crank 74 within easy reach of the driver and between the uprights a drum 75, to which is attached one end of a cord or rope 76. This rope passes rearward over and around a pulley 77, mounted in the upper end of an arm 78, projecting upward from the sickle-chest, and thence forward to a point 79, where it is connected to the arm 80. The arm 80 is rigidly attached to a shaft 81, having bearings at the rear of the sickle-chest. The shaft 81 is provided with two arms 82 and 83, which project forward and lie flat upon the top of the sickle-chest under rollers 84 and 85, which are attached to the sides of the hinged leaf 48 of the revolving table.

Mounted in suitable bearings in the rear part of the machine is a shaft 86, having on its upper end a crank 87 and on its lower end a pinion 88, which engages with the teeth of two rack-bars 89 and 90, sliding in ways 90^a on top of the sickle-chest 11. The rack-bar 90 is provided at 91, near its outer end, with a hinged right-angled arm 92, and the bar 89 is provided with an upright hook-ended bar 93.

The construction of the bars 92 and 93 is clearly shown in Figs. 7, 8, and 9. The right-angled bar 92 is hinged in the extreme end of the rack-bar 90 and is provided with a right-angled extension 92^a, which holds the bar in raised position by impinging against the upper surface of the sickle-box between the ways 90^a.

92^b is a cavity made in the top of the sickle-chest at the extreme end of the guideway 90^a, into which the extension 92^a drops when the rack-bar 90 reaches the end of its stroke, thus allowing the arm 92 to drop to a horizontal position, as shown in Figs. 7 and 8.

93 is a plain bar with the hook at top.

94 is a reel, upon which is wound a suitable supply of cord or wire 95, which passes through an eye 96 and then down along the front edge of the sickle-chest 11 until it reaches and is secured in an eye 97 in the end of bar 92, passing behind an upright flange or protector 98, secured to the front edge of the sickle-chest 11.

Slots 99 and 100 are provided in the hinged leaf 48, and a slot 101 in the revolving table 46 registers with slot 100, these slots being provided to permit the arms 92 and 93 to be drawn toward each other in the operation of forming a bundle.

The operation of my machine may be described as follows: The parts, except the table, being in the position shown in Fig. 1, the machine is drawn forward, the sickle and wheel operating until sufficient corn has been cut and laid upon the revolving table with the heads toward the rear to form a shock. The machine is now stopped, and the driver, taking hold of the crank 62, turns the shaft 59

and pulley 58, which by means of belt 57 and pulley 56 drives shaft 54 and pulley 52, and thence by means of belt 51 and pulley 50 turns shaft 47 and revolves the table 46 a half-revolution until the heads of the corn lying upon it are turned to the front. This brings the revolving table into the position shown in Fig. 1 with the hinges at the rear and the slots at the front, with the corn lying upon the string 95, said string being stretched as shown. The driver now reaches down with a hook, takes the wire or twine and puts it in the hook in the end of arm 93, attached to the front rack-bar 89. He now turns crank 87, which, through the medium of shaft 86, pinion 88, and rack-bars 89 and 90, causes the two arms 92 and 93, carrying the wire or twine, to approach each other in the slots 99 and 100 in the hinged leaf of the revolving table, thereby pressing the tops of the corn together. He now reaches down and ties the two ends of the cord together around the tops of the corn, cuts the cord or wire, fastens the cut end in the eye 97 of the arm 92, then turns the crank 87 in the reverse direction, causing the arms 92 and 93 to leave each other and pass out of the slots in the table until the arm 92 reaches the end of its stroke and automatically drops down, drawing the cord or wire under the arms 93^a and edge of the table again, where it will be protected from injury by the upright strip 98, behind which it lies. The driver now takes hold of crank 74 and by turning shaft 73 winds up cord 76 on drum 75, drawing the upper end of arm 80 upward, and thus partially rotates the shaft 81, which causes the arms 82 and 83 to rise, and by the reason of their bearing under the rollers 84 and 85 raising the hinged leaf 48 of the revolving table to an upright position, as shown in Fig. 4, thus dumping the tied shock of corn, butts down, upon the ground, where it will stand upright. Should he desire to have the operation of the machine revolve the table, he pushes the shifter 69 to the left, causing the cog 68 to engage the crown-wheel 16, and thus turn the shaft 65, which, through the medium of pulley 66 and belt 64, will rotate the pulley 58, and so on through the train of mechanism comprising belts 57 and 51, causing the table to be revolved. After the corn has been dumped the spring 49 will cause the hinged leaf to resume its horizontal position. The cutting and tying of each succeeding shock will be but a repetition of these operations.

While the machine is cutting, the bar 92 must be kept in a raised position to prevent its being injured by the corn through which it is passing, but must be allowed to drop again before the table is turned, so that it will not interfere with the turning.

Having thus fully described my invention, what I claim as new, and desire to secure by Letters Patent of the United States, is—

1. In a corn-harvester, a rotating table provided with a hinged leaf, means for rotating said table at will, rollers on the sides of said hinged leaf, a rock-shaft having arms extending under said rollers, and means for operating said rock-shaft, substantially as and for the purpose set forth.

2. In combination, the table 46, having leaf 48, rollers 84 and 85 on the sides of said leaf, rock-shaft 81, having arms 82 and 83 projecting under said rollers, arm 80 on the end of said shaft, cord 76, pulley 77, pulley 75, and crank 74 within reach of the driver, as set forth.

3. In combination, the rotating table, its pulley 50, belt 51, pulley 52, shaft 54, pulley 56, belt 57, pulley 58, belt 64, pulley 65, cog-wheel 68, and crown-wheel 16 on the driving-shaft, as set forth.

4. In combination, the rotating table, its pulley 50, belt 51, pulley 52, shaft 54, pulley 56, belt 57, pulley 58, belt 64, pulley 65, cog-wheel 68, crown-wheel 16 on the driving-shaft, shifting bar 69, and spring 71, as set forth.

5. In combination, the sickle-chest 11, provided with way on top of it, rack-bars 89 and 90, sliding in said ways, cord-arms 92 and 93, carried by said rack-bars, pinion 88, engaging said rack-bars, shaft 86, and crank 87, as set forth.

6. In a corn-harvester, the combination of a cutting apparatus, a revolving table, slots in said table, sliding rack-bars, and binding-arms carried by said rack-bars and adapted to enter said slots, for the purpose set forth.

7. In a corn-harvester, the combination of a cutting apparatus, a revolving table, slots in said table, rack-bars carrying binding-arms, a pinion engaging said rack-bars, and means for operating said pinion, for the purpose set forth.

8. In combination with a corn-harvester, a cutting apparatus, a revolving table, rack-bars carrying binding-arms, and means for operating said rack-bars, one of said binding-arms being hinged to the rack-bar so as to drop from a vertical to a horizontal position when it reaches the end of its stroke, for the purpose set forth.

9. The combination of the sickle-chest 11, a revolving table, slots in said table, guideways on top of said sickle-chest, rack-bars working in said guideways, binding-arms carried by said rack-bars and adapted to enter the slots of the table, a pinion engaging the rack-bars, a shaft 86, and a crank 87, for the purpose set forth.

10. In a corn-harvester, the combination of a rotating table, a leaf hinged to said table, means for raising said leaf, and a spring for returning said leaf to its normal position, for the purpose set forth.

In testimony whereof I affix my signature in presence of two witnesses.

DAVID S. FISHER.

Witnesses:
J. K. P. SONNER,
CHARLES BLISS.