C. CORNING & A. J. REID.

FIRE AND BURGLAR-ALARM.

No. 193,588. Patented July 24, 1877.

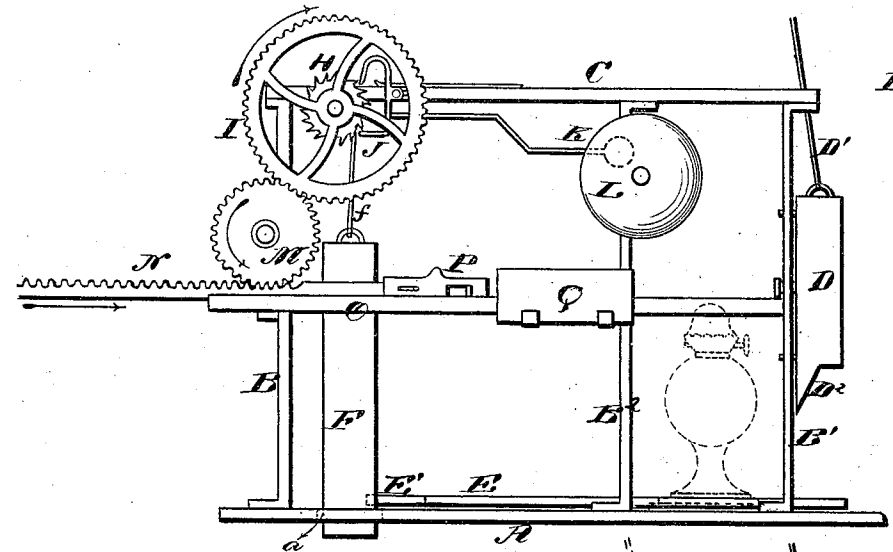

Fig. 1.

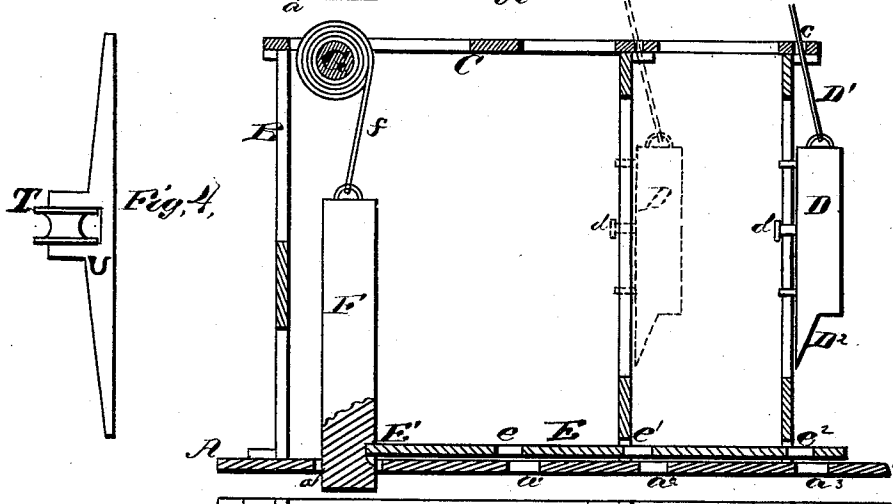

Fig. 2.

Fig. 4.

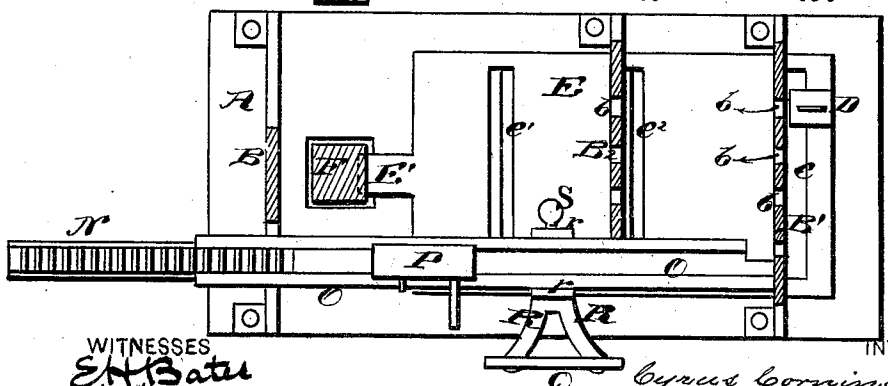

Fig. 3.

WITNESSES

E. H. Bates

George E. Upham

INVENTORS.

Cyrus Corning,

Aquila J. Reid.

Gilmore, Smith & Co.

ATTORNEYS

N. PETERS, PHOTO-LITHOGRAPHER, WASHINGTON, D. C.

UNITED STATES PATENT OFFICE.

CYRUS CORNING AND AQUILA J. REID, OF LAWRENCE, KANSAS.

IMPROVEMENT IN FIRE AND BURGLAR ALARMS.

Specification forming part of Letters Patent No. **193,588**, dated July 24, 1877; application filed January 27, 1877.

To all whom it may concern:

Be it known that we, CYRUS CORNING and AQUILA J. REID, of Lawrence, in the county of Douglas and State of Kansas, have invented a new and valuable Improvement in Fire and Burglar Alarms; and we do hereby declare that the following is a full, clear, and exact description of the construction and operation of the same, reference being had to the annexed drawings, making a part of this specification, and to the letters and figures of reference marked thereon.

Figure 1 of the drawings is a representation of a front elevation of our fire and burglar alarm, and Fig. 2 is a longitudinal vertical sectional view thereof. Fig. 3 is a horizontal section of our fire and burglar alarm, and Fig. 4 is a detail view of the same.

This invention relates to that class of burglar and fire alarms which are operated by the severance or detachment of a cord or cords extending to the exposed parts of a room or building.

The nature of said invention consists in the combination of certain tripping devices, alarm devices, and lamp-lighting devices, as hereinafter particularly set forth.

In the accompanying drawings, A designates the bed-plate of our alarm apparatus, which is provided with a considerable opening, *a*, near one end, and with several transverse slots, a^1 a^2 a^3, at points intervening between said opening *a* and the other end of said plate A. To said bed-plate A are rigidly secured end standards B B^1, and one or more intermediate standards, B^2, which standards B B^1 B^2 jointly uphold a horizontal top plate or top frame, C. Standards B^1 B^2 are provided with vertical guide-slots *b*, each one of said standards being made broad enough to have a series of said slots. There should be one of said slotted standards B^1 B^2 for each transverse slot a^1, a^2, or a^3, in said bed-plate A. Standard B is not slotted, but may have any shape adapted to the attachments and uses hereinafter specified.

In each one of said vertical guide-slots *b* slides a stud or guide-pin, *d*, on a weight, D, which is suspended by a cord, D^1, that runs up through one of a series of perforations, *c*, in top plate C, and extends to a door, window, or other point liable to burglarious entry or to the breaking out of fire. As soon as said cord is severed by such entry or fire the said weight falls, tripping the alarm devices by its action on the following mechanism.

E designates a slide, which is provided with transverse slots e e^1 e^2, registering respectively with slots a^1, a^2, and a^3 of bed-plate A. Said slide E is adapted to be moved longitudinally over the face of plate A, the bottom part of each slotted standard B^1 B^2 being raised or recessed sufficiently to allow said longitudinal movement. One end of said slide is provided with a small point, E′, which projects over one edge of opening *a* when said slide E is in position to be tripped. At the same time each one of its slots partly coincides with one of those in bed-plate A. When tripping-weight D falls, as already described, a beveled extension, D^2, on the lower end thereof dropping into one of the slots of said slide, forcing the latter back, so as to withdraw point E′ from opening *a*, and to allow actuating-weight F, which ordinarily rests upon said point, to fall into said opening. The fall of said actuating-weight turns, by means of cord *f*, a drum, G, journaled in top frame C above said weight, and the extended shaft of said drum carries a small escapement-wheel, H, and a large spur-gear wheel, I. Said escapement-wheel acts, in the usual way, on pallets J, and strikes an alarm by hammer K on bell L. Wheel I engages with a smaller gear-wheel, M, journaled in a bracket secured to standard B, which meshes with and operates a rack, N, sliding in a horizontal longitudinal guideway, O, fixed to the sides of standards B B^1 B^2. To said sliding rack is attached a match-holder, P, extending horizontally at right angles therefrom. Said match, when drawn toward wheel M by the operation thereof, is rubbed against a friction-plate or friction-board, Q, that is fixed in a suitable position by a bracket, R, having lips or flanges r r and clamping-screw S, whereby said bracket is firmly though detachably held to guideway O. After passing beyond said friction-surface said match is presented to a lamp or other illuminator, (shown in dotted lines in Fig. 1,) and ignites the same. Thus the first attempt at burglarious entry causes light to be thrown

upon the scene, and a continuous alarm to be sounded until the occupants of the house are summoned to resist or expel the intruder. In case of fire the action of the apparatus is the same. The alarm will not cease until the actuating-weight F has ceased its descent.

A single tripping-weight may be used instead of a series of them, with a single cord extending to all the points threatened.

Fig. 4 shows in detail a small pin, U, which may be set in the crack of a door or window, in such position that the opening of the same will cause said pin to be detached and fall.

To said pin is secured a small roller, T, over which one of the tripping-cords D^1 passes. Thus, the raising of the window or the opening of the door causes the apparatus to operate, as hereinbefore described. This method of attachment is not necessary, however, since other devices may be employed for the same purpose; or the end of the cord D^1 may be tied across the doorway, so as to break when the door opens; or the window-sash may be set down upon the end of said cord. Any arrangement will suffice which allows the apparatus to work when any of the said cords D^1 are broken or detached.

What we claim as new, and desire to secure by Letters Patent, is—

1. The combination of tripping-weight D, having beveled extension D^2, with transversely-slotted slide E, having point E′, transversely-slotted bed-plate A, and actuating-weight F, substantially as and for the purpose set forth.

2. The combination of weight F, drum G, gear-wheels I and M, rack N, guideway O, match-holder P, and friction-plate Q, substantially as and for the purpose set forth.

3. In a fire or burglar alarm, the combination of an actuating-weight, supported by a slide, with a tripping-weight, the fall of which withdraws said slide, substantially as set forth.

In testimony that we claim the above we have hereunto subscribed our names in the presence of two witnesses.

CYRUS CORNING.
AQUILA J. REID.

Witnesses:
J. W. MOC,
GEORGE FRICKER.