Nov. 11, 1941. G. SABOL ET AL 2,262,051

SYSTEM OF TALKING MOTION PICTURES

Filed Sept. 7, 1938 3 Sheets-Sheet 1

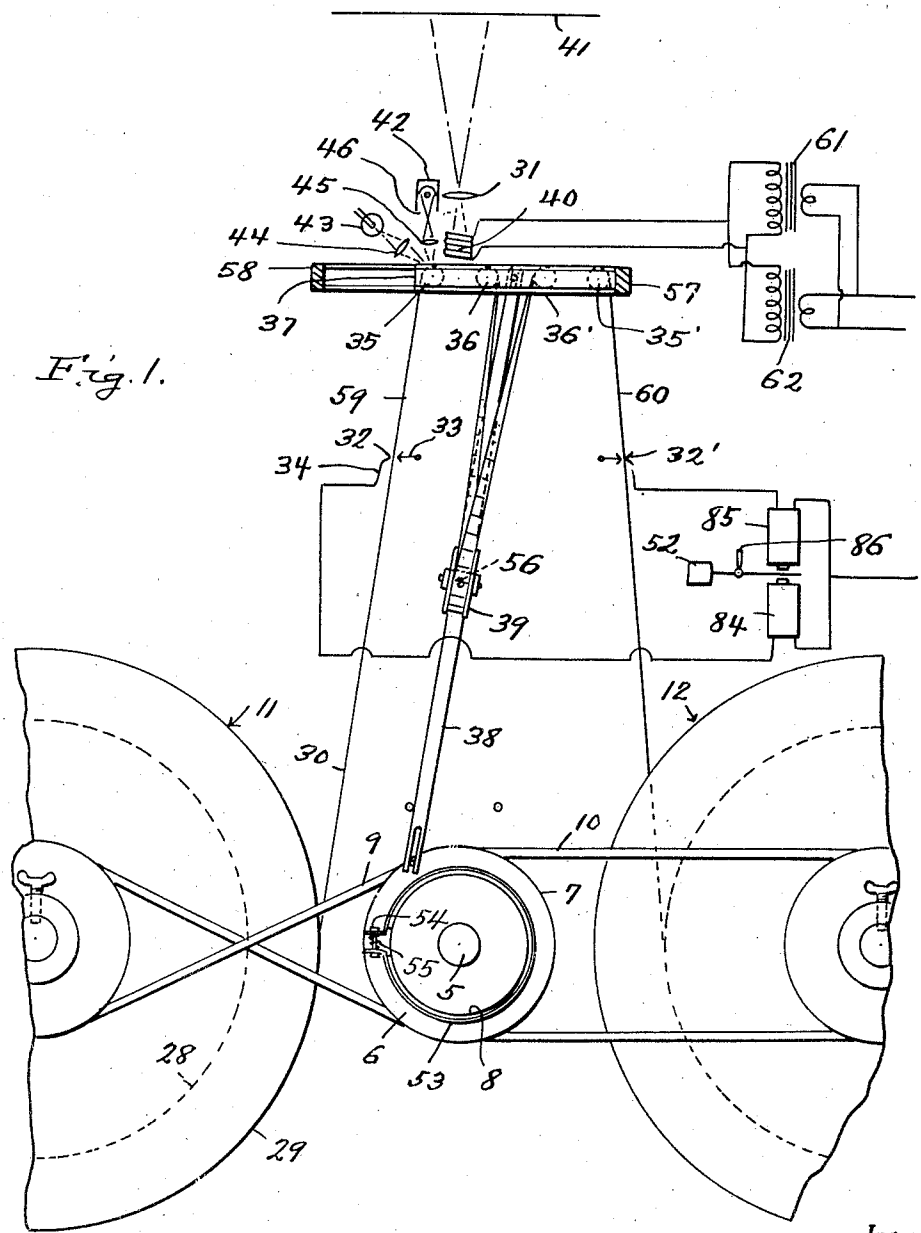

Fig. 1.

Inventors

George Sabol
Michael Sabol
John Sabol

By Clarence A. O'Brien and Hyman Berman

Attorneys

Nov. 11, 1941. G. SABOL ET AL 2,262,051

SYSTEM OF TALKING MOTION PICTURES

Filed Sept. 7, 1938 3 Sheets-Sheet 2

Fig. 2.

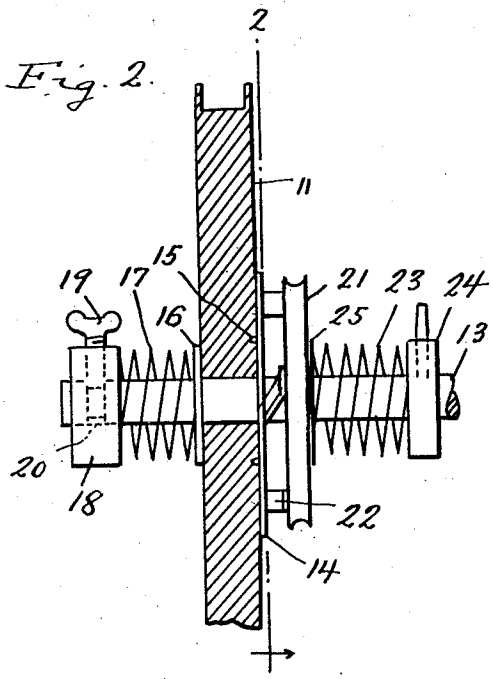

Fig. 3.

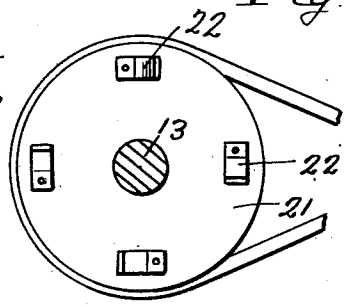

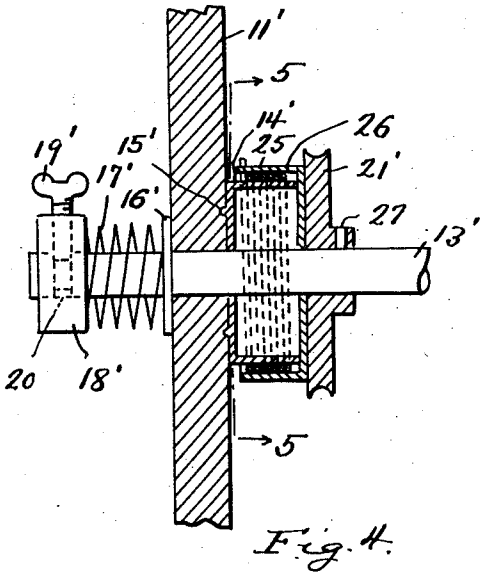

Fig. 4.

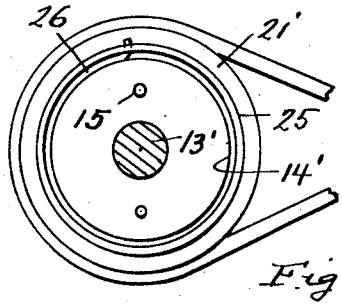

Fig. 5.

George Sabol Inventors
Michael Sabol
John Sabol

By Clarence A. O'Brien
and Hyman Berman
Attorneys

Nov. 11, 1941. G. SABOL ET AL 2,262,051

SYSTEM OF TALKING MOTION PICTURES

Filed Sept. 7, 1938 3 Sheets-Sheet 3

Fig. 6

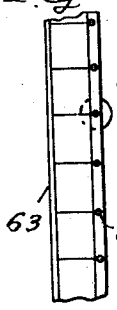

Fig. 7

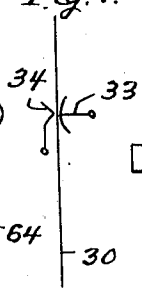

Fig. 8.

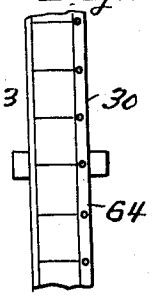

Fig. 9.

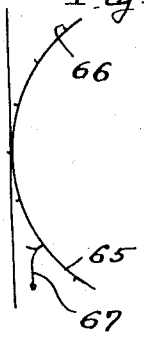

Fig. 16.

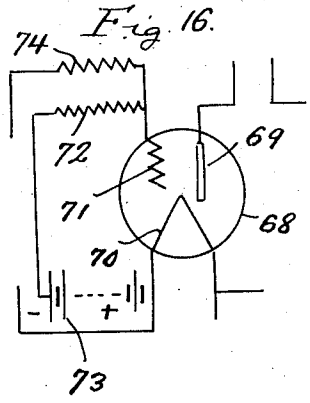

Fig. 10.

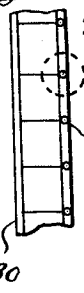

Fig. 11.

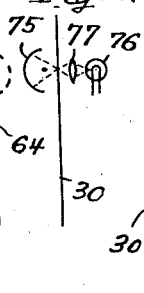

Fig. 12.

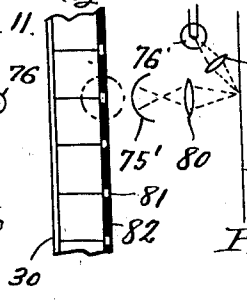

Fig. 13.

Fig. 17.

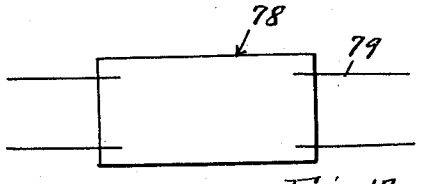

Fig. 14.

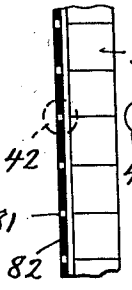

Fig. 15

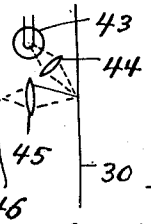

Fig. 18.

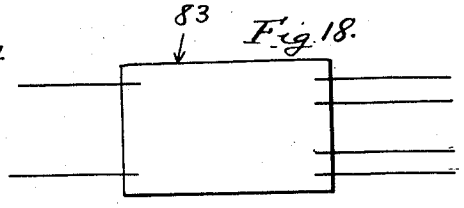

Fig. 21.

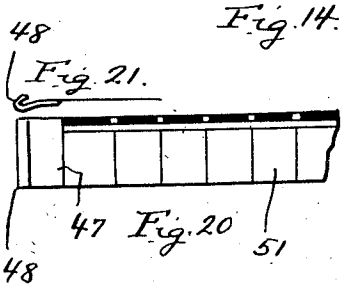

Fig. 20

Fig. 22.

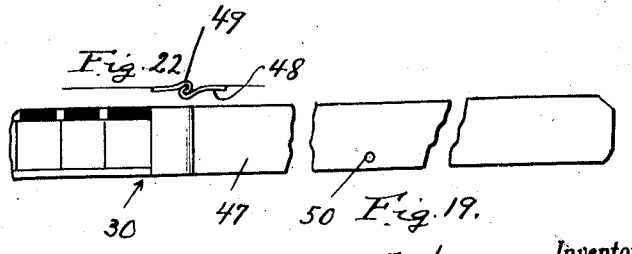

Fig. 19.

Inventors

George Sabol

Michael Sabol

John Sabol

By Clarence A. O'Brien

and Hyman Berman

Attorneys

Patented Nov. 11, 1941 2,262,051

UNITED STATES PATENT OFFICE

2,262,051

SYSTEM OF TALKING MOTION PICTURES

George Sabol, Michael Sabol, and John Sabol,
Clairton, Pa.

Application September 7, 1938, Serial No. 228,848

1 Claim. (Cl. 88—16.2)

Our invention relates to an automatic machine for showing talking motion pictures present on both sides of a length of sound picture ribbon made from inexpensive, nonexplosive material, the machine being characterized by simplicity and an absence of complicated gears and sprockets, the machine being further characterized by inexpensive ribbon illuminating means, which is operated only at the time and at the instant the particular picture is in the frame for exhibition, the entire machine being capable of being made in a size and arrangement to be enclosed in a cabinet similar to a modern radio cabinet, and an important object of our invention is to provide a practical and useful arrangement of the character indicated above which is especially adaptable for store window advertising, scientific exhibition, and for exhibiting educational matter.

Other important objects and advantages of our invention will be apparent from a reading of the following description taken in connection with the drawings, wherein for purposes of illustration we have shown preferred embodiments of our invention.

In the drawings:

Figure 1 is a general sectional schematic diagram of the invention showing the mechanical arrangements and the electrical connections.

Figure 2 is a longitudinal sectional view taken through one form of clutch reel.

Figure 3 is a transverse vertical sectional view taken through Figure 2 approximately on the line 3—3 and looking toward the right in the direction of the arrows.

Figure 4 is a view similar to Figure 3 of another form of clutch reel.

Figure 5 is a transverse vertical sectional view taken through Figure 4 approximately on the line 5—5 and looking toward the right in the direction of the arrows.

Figure 6 is a side view of a picture ribbon with the margin opposite that of the sound track provided with perforations through which two electrical contacts can come together to complete the circuit.

Figure 7 is a diagram of the contacts disposed relative to the ribbon.

Figure 8 illustrates a similar form of film operating in connection with a toothed wheel the teeth of which fit into the perforations.

Figure 9 is a diagrammatic view of Figure 8 showing the arrangement in which a spring contact makes contact with the individual teeth of the wheel.

Figure 10 is a plan view of a film constructed as in Figures 6 and 8, but wherein the perforations act to pass light to a photoelectric cell for actuating the cell.

Figure 11 is a diagrammatic representation of Figure 10 showing an incandescent lamp transmitting light rays through a lens operating to concentrate the light to a point to pass through the perforations to affect the photoelectric cell on the opposite side of the film.

Figure 12 is a plan view of a form of ribbon having on the side or marginal part thereof opposite the sound track a black strip and white light reflecting dots spaced each one frame apart.

Figure 13 is a diagrammatic view of Figure 12 showing the presence of an incandescent bulb passing light through a lens, the lens focusing on the black strip and as the white dots pass thereunder, whereby the light is reflected by the white dots through another lens which in turn projects the light to a photoelectric cell.

Figure 14 is a plan view of another form of ribbon which has the sound track and the synchronizing medium on the same side of the film.

Figure 15 is a diagrammatic representation of the functioning of the arrangement shown in Figure 14, and showing a single photoelectric cell taking up simultaneously the synchronizing impulse and the "sound wave" in the form of light reflected from the sound track and reflecting dots on the black strip along the side of the film, but through a slit in a shield.

Figure 16 is a wiring diagram of the amplifying components for energizing the vapor lamp which illuminates the passing picture frames on the picture ribbons.

Figure 17 is a diagrammatic representation of the radio amplifier unit with single output.

Figure 18 is a diagrammatic representation of a special radio amplifier unit having dual outputs.

Figure 19 is a plan view of a plain length of picture ribbon in accordance with the present invention.

Figure 20 is a plan view of a picture carrying length of the ribbon.

Figure 21 is an edge elevational view showing the hook on one end of the film ribbon section.

Figure 22 shows a pair of the hooks engaged.

Referring in detail to the drawings, and particularly to Figure 1, showing the general arrangement of the machine, the numeral 5 designates a shaft which is driven at a constant speed by an electric motor (not shown) and on shaft 5 are fixed two pulleys 6 and 7 and a drum 8.

The two pulleys transmit their motion by means of respective belts 9 and 10 to the respective picture ribbon reels 11 and 12. The reels may either be of the cam type shown in Figures 2 and 3 or of the spring coil type shown in Figures 4 and 5.

Common to both types of reels are the shafts 13 on which is fixed a disk back rest 14, in the case of Figure 2 or the drum 14' shown in Figure 4, these having projections 15 and 15' respectively, which fit into depressions in the reels so that the elements 14, 14' and the reels 11 or 12 are connected for rotation when the clutch mechanism is engaged. The reels are held against the projections by a single unit consisting of a friction washer 16, 16', a compression spring 17, 17' held in place by a stop collar 18, 18' equipped with a locking screw 19, 19' which fits into a groove 20, 20' cut in the shaft 13, 13', this assembly being readily removable by loosening the screw 19, 19'.

The respective one of the belts 9, 10 is trained over the respective one of the pulley forms 21, 21' both of which rotate freely on the respective shafts 13, 13' when the belt moves in one direction, but are rotated so as to rotate the shaft 13, 13' and the reel when the belt moves in the opposite direction, upon reversal of the motor. In the cam clutch type shown in Figures 2 and 3 this connection is accomplished by the spring cam arms 22, which may be of fiber, leather or the like and are arranged at a suitable angle to press against the disk 14, the engagement being maintained by the expanding spring 23 which operates between a stop collar 24 and a washer 25 riding against the pulley 21. When the belt moves in one direction the pulley 21 rides freely on the shaft 13 but when the belt moves in the opposite direction the cams 22 tend to lock with the plate 14, so that the pulley 21 turns the shaft 13.

In the case of the arrangement shown in Figures 4 and 5, herein called the spring coil type, the pulley 21' has attached to it the drum 25, inside of which is a steel coil helix 26, one end of this helix being attached to the drum 25, the other end being free, and the whole telescoping snugly over the drum 14. A pin 27 in a collar portion on the pulley 21' is engaged in a groove in the shaft 13' to prevent the pulley 21' from moving along the shaft in a right hand direction. When the belt moves the pulley 21' in one direction the pulley rides freely over the drum 14, but when the belt moves in the opposite direction the coil or helix turns the drum 14 and thereby turns the shaft 13 and the reel 11'.

To a depth indicated by the distance between the numerals 28 and 29 on both reels 11 and 12, the picture ribbon 30 is wound, the ribbon being made of some paper or other non-explosive composition, on either or both sides of which there has previously been photographed, processed, or printed or otherwise placed a sequence of pictures with sound accompaniment track alongside the pictures, as in standard motion picture film. The radius extending from the center of the shaft of the reels to the point 28 is approximately three-quarters of the length of a radius extending from the said center to the point 29, and the reels are comparatively large so that they may accommodate as long a ribbon as is possible or as is wanted.

The reels are arranged to rotate at exactly the speed to pass an average of 21 picture frames per second under the projection lens 31

The picture ribbon starts from one reel, passes through an electrical contact assembly 32, 32' respectively, consisting of a metallic button 33 and a spring 34, over the guide rolls 35, 36 and 35', 36', as the case may be, the rolls being attached to a movable and sliding frame 37 to which is pivoted an arm 38. The ribbon then descends and loops around the guide roll 39 pivoted on the arm 38, the roll 39 being fixed to the arm 38 and its motion arranged at right angles to that of the rolls 35, 36 and 35' and 36'. The ribbon then returns toward the frame 37 and as it goes once again over the rolls the opposite side or face of the ribbon becomes uppermost. The ribbon then descends and passes through the companion contact arrangement 32, 32', as the case may be and thence to the reel other than that on which the ribbon originated.

Over the frame 37 and immediately over the moving ribbon is fixed an electric vapor lamp 40 consisting of a glass tube properly filled with mercury, neon or other suitable gas, and shaped in the form of a helix in a size to just encircle a single picture frame on the ribbon 30. Above this helical vapor lamp is the projection lens 31 which projects onto the screen 41, a magnified image of the picture on the ribbon, every time the vapor lamp is energized. The screen 41 may be either a frosted glass or a highly reflecting surface such as a calcium oxide or glass bead. In either case the screen is compounded with a fluorescent material such as uranium oxide and the like, which affords better screen efficiency in that "flicker" is thereby eliminated and the image on the screen is much brightened.

Alongside of the vapor lamp 40 is mounted a photoelectric cell 42 and a source of illumination 43 such as a "Mazda" bulb, with a lens 44 in such an arrangement that the light from the source 43 is focused by the lens 44 on the sound accompaniment track on the ribbon 30. The lens 45 which relates to the photoelectric cell 42 is of a good quality and focuses on a shield 46 which has a small slit, an image of the sound track illuminated by the source 43, the slit in the shield permitting light only from individual "sound waves" in the scund track to enter the photoelectric cell 42.

As shown in Figures 20, 21 and 22, the picture ribbon 30 consists of a blank length 47 one end of which is attached to the respective reel by means of the hook 48 which inter-engages with the hook or depression in the web of the ribbon receiving groove of the reel. The opposite end of this section has a non-conductive oppositely turned hook 49 for engaging with another one of the hooks 48 on an adjacent strip or section. The blank strip 47 is just long enough to pass from one reel, through the electrical contact 32 or 32', over the guide rolls with the loop and a little beyond the electrical contact 32, 32' on the opposite side of the arm 38. On this plain section 47 and spaced longitudinally inwardly from the hook 48 at a distance equal to a little more than the distance from 32 to 32' over the guide rolls with the loop, is a perforation 50. To the grip hook 48 is hooked the hook-like dielectric member 49 on the picture ribbon section 51, which section 51 has impressed on its opposite or on both sides an arrangement of motion picture frames with sound track. On the other end of the section 51 and on opposite faces is the beginning and end of two picture series. In an instance wherein one series of pictures ends on one face of the picture ribbon, another series of pictures begins immediately on the opposite face

or side of the ribbon. In installing the blank section 47, this section is coiled first on the reel and commences from the point 28 on the reel. Following the section 47 and hooked to it is the section 51 which ends in a grip hook 48 as already stated.

Operation

Referring to Figure 1 of the drawings, the reel 11 has just been operated to coil on the picture ribbon from the reel 12 and the electric motor (not shown) connected to an automatic reversing switch 52, is about to reverse its rotation. Assuming that the motor has reversed itself, the shaft 5 will now rotate clockwise, thereby causing the corresponding one of the pulleys 6 and 7 to rotate also clockwise as well as the drum 8. As the drum 8 rotates it drags the friction band 53 around to the right, the friction on this band with the drum 8, being adjusted by the screw bolt and compression spring 54, and 55, respectively, so that the band moves the arm 38 about its fulcrum mounting 56 which, in turn, moves the frame 37 from the stop 57 to the stop 58, which action exposes the opposite face of the ribbon 30 to the vapor lamp 40. As indicated the opposite ends of the arm 38 are pivotally and slidably connected to the frame 37 and to the friction band 53.

During this action and in the meantime the clutch arrangement of the reel 11 is automatically disengaged and the clutch on the reel 12 is automatically engaged, so that the reel 12 is now the take-up reel. The reels rotate at such a speed that when the ribbon is half coiled on them, the velocity of the ribbon is about 21 picture frames per second, which is normal for good talking motion pictures. Because the reels rotate at a constant velocity, at all times, it is necessary that the ribbon shall coil on the reels from the point 28 to the point 29, the ratio of the distance between the two points being about 3 to 4. The reels will then pass about 18½ frames per second at the start of the showing of the picture and about 23½ frames per second at the close of the showing of the picture, this arrangement being found to give very satisfactory results. While the reel 12 is acting as the take-up reel, the friction washer in the case of the type shown in Figure 2 and the drum in the case of the type shown in Figures 4 and 5 works against the reel 11 and helps to keep the ribbon taut, and the ribbon thereby coils on the reel 12 snugly and at no time is there a loose or hanging ribbon.

Whether the ribbon in passing through the frame 37 travels to the right or to the left, the fixed photoelectric cell 42 picks up the sounds from the ribbon. This sound is made audible by a standard radio amplifier or high gain amplifier such as is present in good commercial radios. By a simple electric switch, the photoelectric cell 42 can be disconnected when the radio is to be used for broadcast programs, supposing that the device of the invention is installed in a radio cabinet having a radio set therein.

At some convenient place along the ribbon, such as the places designated by the numerals 59 and 60, is arranged a synchronizing unit. The purpose of this unit is to control a surge of electric power into the primary of one or more electrical transformers such as 61 and 62. The secondaries of these transformers are permanently connected to the electric vapor lamp 40 and serve to transfer the surge of power from the primary to the vapor lamp 40 in a form suitable for proper energization of the vapor lamp.

The surge of power referred to occurs every time a picture frame on the ribbon is directly under the electric vapor lamp 40 and in position for projection. This surge of power is governed by the synchronizing elements on the ribbon itself so that irrespective of the velocity of the ribbon the projection of the picture frames on the screen 41 follows in perfect order for good motion pictures. The synchronization of these electric power surges is effected by any of the following methods.

By the arrangement shown in Figures 6 and 7 wherein the ribbon is provided preferably opposite the sound track 63 with small perforations 64 spaced exactly one frame apart and being around one sixty-fourth of an inch in diameter, this portion of the ribbon being arranged to pass up or down between two electrical contacts, one a metallic button 33 and the other a fine composition steel spring wire 34 already referred to, the wire and the button making contact with each other as each perforation of the ribbon passes.

Another suitable arrangement of the character indicated is illustrated in Figures 8 and 9 of the drawings wherein a wheel 65 having teeth 66 projecting therefrom individually engage a steel spring wire contact 67, the teeth fitting into the perforations 64 similar to the perforations described in connection with Figures 6 and 7, so that a contact is made between an individual one of the teeth 66, for each passage of a picture frame.

A still further arrangement, shown in Figure 16 contemplates a three element thermionic tube 68, comprising a filament, a grid, and a plate, with the plate 69 connected in series with the primaries of the transformers 61 and 62. To this plate circuit is supplied the positive terminal of a suitable direct current potential. The negative of this potential is connected to the filament 70 of the tube 68, while the grid 71 is connected in series with a resistance 72 to the negative terminal of the direct current potential 73 which may be merely a dry pile. The positive terminal of the direct current potential 73 is connected to the filament. The magnitude of the direct current potential 73 is such that it just prohibits the flow of electricity between the plate and the filament. Directly across the grid and the filament and through the resistance 74, of a smaller capacity than the resistance 72, is connected the contact button 33, the contact 34, or the sprocket wheel 65 or its wire contact 67. Every time one of these elements makes contact as the ribbon travels, the potential across the grid and filament is greatly lowered and there is produced a surge of power or electricity between the plate circuit and the filament of the tube 68. This surge of power energizes the transformers which causes immediate lighting of the vapor lamp, which in turn illuminates the passing picture frame in proper order for projection in the form of motion pictures.

Another form of this arrangement shown in Figures 10 and 11 of the drawings contemplates a photoelectric cell 75 picking up a light impulse through each of the perforations 64 in a form of ribbon similar to that shown in Figures 6 and 8, the light being projected by an incandescent bulb 76 in conjunction with a lens 77 on the opposite side of the ribbon 30, projecting the light rays through the perforations. This impulse in

the photoelectric cell 75 is amplified by an amplifier 78 shown in Figure 17, which is separate from the sound amplifier. The output 79 from the amplifier 78 is connected directly to the vapor lamp 40, or if the vapor lamp is of a high voltage type, the output 79 is connected to the primaries of the transformers 61 and 62. The result is that the vapor lamp is energized momentarily and in synchronism with the passing of each picture frame on the ribbon, thereby producing direct motion pictures.

A still further arrangement, being that illustrated in Figures 12 and 13 of the drawings employs a photoelectric cell 75' but this is affected by light coming through a lens 80 which receives light reflected from white dots 81, spaced a picture frame apart along the edge of the ribbon on a black background 82 of non-reflecting character, the motivating light being supplied by a light source such as the bulb 76' passing light through a concentrating lens 76' on to the strip 82. When the output of the photoelectric cell 75' is amplified, the resultant produces the motion pictures as already described.

A still further arrangement illustrated in Figures 14 and 15 of the drawings is similar to the arrangement shown in Figures 12 and 13, but there is interposed between the lens 80 and the photoelectric cell 75', in this case a single photoelectric cell, a shield 46 already mentioned hereinabove, which has a slit. The single photoelectric cell arrangement picks up simultaneously the synchronizing impulse and the sound through the slit in the shield 46, and this combined impression on the photoelectric cell is introduced into a special amplifier 83, in which the "sound" is separated from the synchronizing impulse, and each is separately amplified for their respective functions as in the priorly described arrangements.

Returning to the operation of the device, and assuming now that the reel 12 has just completed coiling the entire picture ribbon thereon, the hook 48 now appears on the right hand side of the arm 38 and also a little below the contact arrangement 32'. When in this position the contact 32 on the left hand side of the arm 38 closes the circuit to the electro-magnet 84, the electro-magnet immediately kicks the reversing switch 52 which produces reversing of the motor (not shown) and the device goes into operation to show the opposite side or face of the ribbon to be exhibited. The magnet 85 operates as described in connection with the magnet 84 when the conductive hook 48 appears on the left hand side of the arm 38. The perforation 50 on the plain strip 47 of the ribbon allows the conductive hook 48 to kick the reversing switch at the proper time.

A handle 86 is attached to the armature of the reversing switch 52 and this is to be operated manually for the purpose of reversing the picture ribbon at will whether the ribbon is entirely coiled or not on either of the reels 11, 12 It also serves the purpose of bringing back the conductive hook 48 below the appropriate one of the contact arrangements 32, 32' if the hook has already gone some distance toward the opposite reel. When the hook 48 is a little below either of the arrangements 32, 32' the reels are removed and replaced, as the blank strip 47 of the ribbon is then in proper and easiest position for either the removal or the exchange of reels. When the hook 48 is below the contact arrangements 32, 32' the stopping switch (not shown) of the motor is opened and the full reel can then be exchanged for a new full reel, after which the unshown switch for the motor is again closed and the machine is then ready to show once again.

Although we have shown and described herein preferred embodiments of our invention, it is to be definitely understood that we do not desire to limit the application of the invention thereto, and any change or changes may be made in the materials and in the structure and arrangement of the parts, and in the method of operating the same, within the spirit of the invention and the scope of the subjoined claim.

Having described the invention, what is claimed as new is:

A motion picture device for exhibiting the subject matter within picture frames on the opposite sides of a ribbon, said device comprising a constant speed motor, a dual rotor driven thereby, a first ribbon reel, a second ribbon reel, means operatively connecting said reels to said dual rotor for rotation of said reels in opposite directions, reversing means for said motor, a reciprocably mounted exhibitor frame, a projection light source arranged with respect to said exhibitor frame, a fulcrumed lever operatively connected at one end to said exhibitor frame and at its opposite end to an eccentric portion of said duel rotor, said reversing means comprising first circuit closing means and second circuit closing means located at opposite sides of said lever, said ribbon being wound on said reels and supported for movement across said exhibitor frame and for movement relative to said first and second circuit closing means, said ribbon having elements to engage and operate said circuit closing means, a roller mounted at the fulcrum of said lever and around which an intermediate portion of the ribbon is reverse looped midway of its transit across said exhibitor frame, and synchronizing means for energizing said light source only at registration therewith of successive picture frames on the ribbon, said ribbon being provided on both sides with a non-reflecting strip having light reflecting portions spaced at picture frame intervals, said synchronizing means comprising a photo-electric cell at one side of said ribbon, a light source at the same side of the ribbon concentrating light on said strip, said photo-electric cell being arranged to receive the light reflected from said reflecting portions.

GEORGE SABOL.
MICHAEL SABOL.
JOHN SABOL.